Inland Empire Utilities Agency
A MUNICIPAL WATER DISTRICT

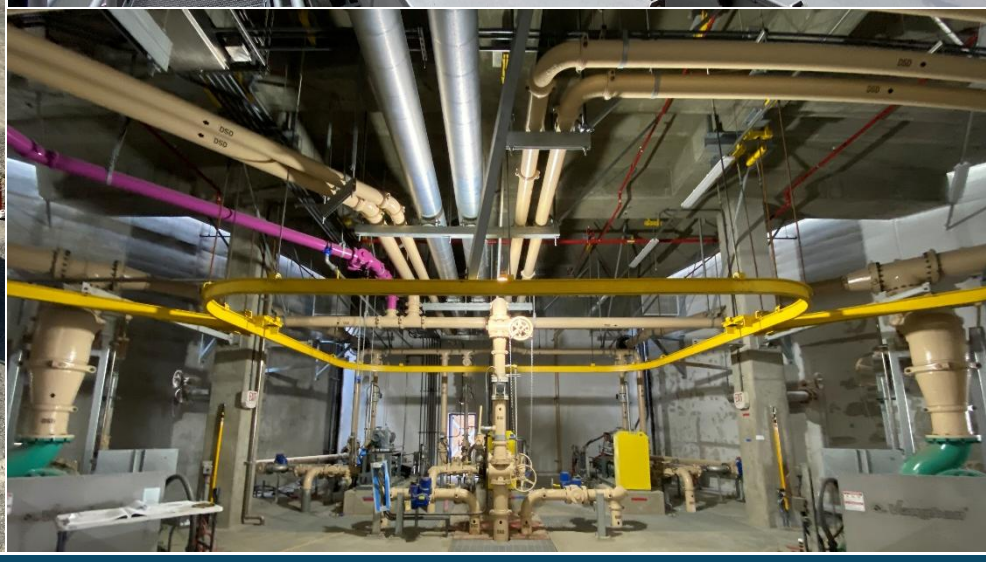

ENGINEERING DESIGN GUIDELINES (Revision 1)

INLAND EMPIRE UTILITIES AGENCY

September 2025

AVAD ENGINEERING

IEUA Engineering Design Guidelines

The Engineering Design Guidelines (EDG) document has been prepared for the purposes of documenting and communicating Inland Empire Utilities Agency (IEUA) preferences. The goal of the EDG is to support consultants during design development and to promote consistency in project delivery.

Information contained within this document is the outcome of workshops, interviews, and feedback IEUA Engineering, Operations & Maintenance, Asset Management, and Information Technology departments.

Changes to the information contained within this living document are anticipated to evolve in order to align with IEUA preferences as time progresses.

Preface

The Engineering Consultant Guidelines communicate design preferences of the Inland Empire Utilities Agency (IEUA) to its consulting engineers/designers to improve consistency and efficiency to project deliveries.

The Engineering Consultant Guidelines are not inclusive of all requirements and are not meant to relieve the consulting/design engineers from any of it responsibilities to execute its work according to its Contract with IEUA. The Guidelines were developed mostly in tabulated forms to improve their use and ease of future modifications. The level of completeness and usefulness of these Guidelines will improve with their use and updates.

The level of details included in the Guidelines was targeted to the 30-percent design level. The tabulated format should be helpful to incorporate applicable requirements into the Preliminary Design and or the Basis of Design documents of the project. The level of details/requirements is not the same for different design disciplines. The Guidelines have the following attributes:

1. The Guidelines were developed with emphasis on technical areas that are common sources of inconsistencies during designs.
2. The extent of the Electrical and I&C Guidelines is the highest, followed by Mechanical/HVAC.
3. General Guidelines were developed for other disciplines such as Structural, Civil, etc.

User of these Guidelines should direct their comments and questions to IEUA's project manager for the individual project. The Engineering Department will be the central point of contact for any requested modification of the Guidelines. Consultants are encouraged to provide formal recommended modifications to the Guidelines as applicable to IEUA's projects.

Table of Contents

IEUA Engineering Design Guidelines i
Preface i
Table of Contents i
Section 1- Background and General 2
1.1 IEUA Introduction/Background 4
1.2 Guidelines Development Process 7
1.3 General/Miscellaneous 9
Section 2 Mechanical 14
2.1 General Mechanical Requirement 16
2.2 Valves 19
2.2.1 Valves, General 19
2.2.2 Gate Valves 21
2.2.3 Check Valves 23
2.2.4 Double Offset Butterfly Valves 25
2.2.5 Pressure Reducing/Pressure Relief Valves 27
2.2.6 Diaphragm Valves 28
2.2.7 Air Release and Vacuum Valves 29
2.2.8 Air Valve Sizing 30
2.2.9 Plunger Valves 32
2.2.10 Plug Valves 33
2.2.11 Sluice/Slide Gates 34
2.2.12 Miscellaneous Valves 38
2.2.13 Valve Actuators 40
2.3 Pipe and Valve Schedule 42
2.4 Pumps 50
2.4.1 Pumps, General 50
2.4.2 Horizontal Centrifugal Pumps 53
2.4.3 Submersible Sump Pumps 54
2.4.4 Submersible Wastewater Pumps 55
2.4.5 Sludge Dewatering Piston Pumps 56
2.4.6 Positive Displacement Rotary Lobe Pumps 57
2.4.7 Progressive Cavity Pumps 58

2.4.8 Vertical Turbine Pumps 59
2.4.9 Centrifugal & Axial Pumps 60
2.4.10 End-Suction Centrifugal Pumps 61
2.4.11 Pumps Schedule 62
2.5 Chemical Storage and Feed Facilities 66
2.5.1 Chemical Storage and Feed Facilities, General 66
2.5.2 Chemical Metering Pumps 67
2.5.3 Chemical Storage Facilities 69
Section 3- Heating, Ventilation, and Air Conditioning (HVAC) 72
3.1 HVAC General 74
3.2 Air Conditioning Units 81
3.3 Heat Pumps 85
3.4 Exhaust Fans 87
3.5 Ductwork and Accessories 89
3.6 Ventilation Schedule 93
Section 4- Electrical and Instrumentation & Control 97
4.1 Electrical and I&C, General 99
4.2 Low Voltage Wire and Cable 115
4.3 Medium Voltage Underground Cable 121
4.4 Grounding and Bonding 123
4.5 Raceway and Boxes 126
4.6 Electrical Equipment Identification 133
4.7 Dry-Type Transformer 139
4.8 Liquid-Filled Transformer 143
4.9 600-Volt Variable Frequency Drives 147
4.10 Lighting 156
4.11 Two-Way Radio 159
4.12 Motors 163
4.13 Low-Voltage Switchboard and MCCs 166
4.14 Generators 174
4.15 Medium-Voltage Switchgear and Circuit Breakers 179
4.16 Panelboard 183
4.17 Control Panel & Devices 186
4.18 Control System Hardware & Software 197
4.19 Instrumentation 207

Electrical Appendices 213
i Operation and Control Philosophy Sample 215
ii Equipment Tagging 232
iii SCADA Standards 250
PROCESS AUTOMATION CONTROLLER PROGRAMMING STANDARDS 258
PROCESS AUTOMATION CONTROLLER PROGRAMMING STANDARDS 259
HIGH PERFORMANCE HMI PROGRAMMING STANDARDS 295
HIGH PERFORMANCE HMI PROGRAMMING STANDARDS 296
APPENDIX B - ALARM MANAGEMENT STANDARD 337
APPENDIX B - ALARM MANAGEMENT STANDARD 338
APPENDIX C - HMI STYLE GUIDE 358
APPENDIX C - HMI STYLE GUIDE 359
APPENDIX D - SAMPLE DISPLAYS 367
APPENDIX D - SAMPLE DISPLAYS 368
APPENDIX E - HMI GROUPS AND SECURITY CODES 373
APPENDIX E - HMI GROUPS AND SECURITY CODES 374
APPENDIX F - IO LOOP TEST FORM 377
APPENDIX F - IO LOOP TEST FORM 378
APPENDIX G- DEVICE TEST FORM 388
APPENDIX G- DEVICE TEST FORM 389
APPENDIX H- LOGIC TEST FORM 400
APPENDIX H- LOGIC TEST FORM 401
iv Network Infrastructure Specification 425
v Project Design ISS Requirements 458
Vi Motor Control Schematics 462
Vii Control Panel Power and UP 468
S Installation Detail 481
Section 5- Civil/Structural/Architectural/ Hydraulics 483
5.1 Civil 485
5.2 Structural 496
5.3 Architectural 505
5.4 Hydraulics 522
Section 6- Processes 524
6.1 Biosolids Processes 526
6.2 Anaerobic Digester Rehab (Concrete Fixed Roof) 536
6.2.1 Digester Mixing Systems 538
6.2.2 Sludge Recirculation 539

6.2.3 Sludge Heating 540
6.2.4 Piping and Appurtenances 541
6.2.5 Drip Trap and Sediment Traps 544
6.2.6 Hazard Classification 545
6.2.7 Grounding/Lightning Protection 546
6.2.8 Instrumentation 547
6.2.9 Pressure/Vacuum Relief 549
6.2.10 Digester Gas Valve 550
Section 7- Permits 553
7.1 Permits 555
Section 8- Project Management Tools 568
8.1 Project Design Checklist 570
8.2 Business Case Evaluation Manual 573
8.3 Equipment Sole Sourcing Guidelines 660
8.4 Schedule of Values Sample Template 662
Section 9- Spare Parts Strategy 667
9.1 Spare Parts Strategy 669
General Attachments 673
GA.1. Survey Requirements 675
GA.2. Landscape Guidelines 678
GA.3. Commissioning Plan Roles and Responsibilities 682
GA.4. O&M Manual Standard Samples 686
GA.5. IEUA AutoCAD Standards and CAD Manual 752
GA.6. Unit Process Control Procedure and Standard Operating Procedure Samples 844
GA.7. Pipe Color Code Chart 874
GA.8. Design Criteria Sheet 877
GA.9. IEUA Engineering Standard Details 880
GA.10 IEUA Board Approved Standardized Equipment 965

Inland Empire Utilities Agency
A MUNICIPAL WATER DISTRICT

Engineering Design Guidelines

Section 1- Background and General

AVAD ENGINEERING

Section 1- Background and General

Inland Empire Utilities Agency
A MUNICIPAL WATER DISTRICT

1.1 IEUA Introduction/ Background

1.1 IEUA Introduction/Background

The Inland Empire Utilities Agency (IEUA/Agency) is a regional wastewater treatment agency and wholesale distributor of imported water serving approximately 935,000 people throughout western San Bernardino County. Under the leadership of a directly elected five-member Board of Directors, the Agency is committed to supporting the needs of its service area and safeguarding public health through significant investments in a diverse water supply portfolio, reliable municipal/industrial wastewater collection and treatment services, and other related utility services in a regionally planned and cost-effective manner.

As a member agency of the Metropolitan Water District of Southern California (Metropolitan), IEUA provides supplemental water supplies, primarily via the State Water Project (SWP) to the cities of Chino, Chino Hills, Fontana via Fontana Water Company and portions of West Valley Water District, Montclair via Monte Vista Water District, Ontario, Rancho Cucamonga via Cucamonga Valley Water District, and Upland (including San Antonio Water Company). IEUA also replenishes local groundwater supplies with captured rainwater and recycled water produced by IEUA that is later extracted by local water agencies for use as a drinking water supply.

Water recycling is a critical component of the water resources management strategy for IEUA and the Chino Basin. The Agency is responsible for treating 50 million gallons per day of wastewater, on average, received from seven sewering agencies including the cities of Chino, Chino Hills, Fontana, Montclair, Ontario, and Upland, and the Cucamonga Valley Water District. This water is treated to Title 22 regulations set forth by the State Division of Drinking Water and distributed to its retailers for agriculture, municipal irrigation, industrial uses, and groundwater replenishment.

IEUA currently operates five regional wastewater treatment plants: RP-1 (Ontario), RP-2 – Solids (Chino), RP-4 (Rancho Cucamonga), Carbon Canyon Water Recycling Facility (Chino), and RP-5 (Chino).

In conjunction with these facilities, IEUA also maintains and operates:

- The Chino Desalter I (located in Chino) on behalf of the Chino Basin Desalter Authority, which uses reverse osmosis technology to remove salt and nitrates from groundwater pumped from 14 wells throughout the Chino Basin. It produces 10.9 mgd of high-quality drinking water, serving the water needs of approximately 35,000 people.
- The Inland Empire Regional Composting Facility (located in Rancho Cucamonga) on behalf of the Inland Empire Regional Composting Authority, which uses biosolids from the wastewater treatment process to produce over 230,000 cubic yards of high-quality compost each year for local landscaping and horticultural use, marketed under the name SoilPro.
- 46 groundwater recharge basins across 19 recharge sites designed to hold stormwater run-off, imported water, and IEUA recycled water to replenish alluvial aquifers and groundwater supply. Through partnership with the Chino Basin Water Conservation District and the San Bernardino Flood Control District, IEUA's groundwater recharge framework enhances the current reliability of local supplies for a rapidly growing population and is an integral part of the Agency's local water supply planning efforts.

The Agency also prioritizes initiatives that enhance and preserve the quality of life throughout the region, which include investments in local water resources, conservation programs, and renewable energy sources. IEUA advocates for environmental stewardship and offers several free educational resources and outreach programs to inform students and the community on ecological preservation, water awareness, and sustainability.

Inland Empire Utilities Agency
A MUNICIPAL WATER DISTRICT

1.2 Guidelines Development Process

1.2 Guidelines Development Process

The Guidelines development process was established from the onset to mostly document current IEUA staff experience in the delivery of various projects and to reduce inconsistencies among similar types of projects. The development process involved significant interaction with IEUA staff through multiple workshops and one-on-one meetings. All IEUA Departments were represented in the process including Engineering, Operations, Maintenance, Technical Services, Construction Management, Electrical, HVAC, and Process Automation & Control. Input was sought from all relevant staff for the subject being developed.

The focus was on areas that represented the highest degree of design discrepancies or construction change orders. As such, the extent of the Electrical and I&C Guidelines is the highest, followed by Mechanical/HVAC.

The level of details included in the Guidelines was targeted to the 30-percent design level. The tabulated format should be helpful to incorporate applicable requirements into the Preliminary Design and or the Basis of Design documents of the project. The level of details/requirements is not the same for different design disciplines.

The Guidelines are not meant to be complete nor comprehensive, rather, this was a significant initial effort to start the process. The content and completeness of these Guidelines will continue to progress with use and future modifications. A formal annual review process was intended. The Engineering Department will be the central point of contact for any requested modification of the Guidelines.

Inland Empire Utilities Agency
A MUNICIPAL WATER DISTRICT

1.3 General/ Miscellaneous

1.3 General/Miscellaneous

			LAST UPDATED Sep 1, 2025
Clause	**Parameter**	**Criteria**	**Notes**
0	Scope	This document applies to General/Misc.	
1	Project Schedule	Primavera Version 7.0 unless otherwise approved by the PM.	
2	Construction Cost Estimates for IEUA Reviews	Preliminary, 60, 90, and 100 percent.	Minimum.
3	Design Submittals for IEUA Reviews	'Preliminary, 60, 90, and 100 percent.	Minimum.
4	Permits	Consider all applicable permits. For onsite projects, typically only California Environmental Quality Act (CEQA), South Coast Air Quality Management District (SCAQMD), and/or National Pollutant Discharge Elimination System (NPDES) permits may be required.	See Section 7 for details.
5	Site Visit, Survey, Geophysical Investigation, and Potholing	Review alignments for visible utility conflicts, constructability, and ease of operations and maintenance of the facilities. Conduct geophysical investigation to determine presence of subsurface features. Perform potholing to determine depths of subsurface features.	
6	Technical Specifications	CSI Format, "Green Book" Standard Specifications for Public Works Construction can be referenced in lieu.	
7	Right-of-Way/Easements	Consider all applicable Right-of-Way/Easements requirements and limitations and how they are communicated with the Contractor.	
8	Equipment "Birth Certificate"	Create "Birth Certificate" for each new equipment to include, size, capacity, year of construction, cost, tolerances, measured vibration, etc.	Latest Forms are available from Construction Project Manager.
9	Landscape	Review project landscape requirements with IEUA staff.	
10	Forklifts	Use electric units and propane.	Electrical units are preferred.
11	Equipment's Needing Backwash	Use recycled water in lieu of potable water where possible.	
12	Spare Parts	Evaluate spare parts requirements for all critical mechanical equipment being	

		LAST UPDATED	Sep 1, 2025
Clause	**Parameter**	**Criteria**	**Notes**
		designed and discuss with IEUA O&M Staff.	
13	Equipment Pre-purchasing/ Preselection	Avoid and keep under contractor to procure and install.	
		If equipment preselection is beneficial to IEUA, assign preselected equipment to Contractor to procure in order to maintain single point of responsibility.	
14	Equipment Utility Pads	Provide for all equipment.	
		Use reinforced concrete.	
		Bollards are necessary to protect utilities, where applicable.	
16	O&M/ SOPs/ UPCPs	IEUA is transitioning to an Electronic Library enterprise network that includes: • Conversion of its treatment facility Operations and Maintenance (O&M) Manuals to a standardized electronic format and level of content • Establishment of standardized formats and content for Standard Operating Procedures (SOPs) and Unit Process Control Procedures (UPCPs) Examples of the standardized format and level of content for O&M Manuals, SOPs, and UPCPs are included in the General Attachments to these Guidelines	
17	Identification Devices	Develop a technical specification section to require Contractor to furnish and install all identification devices as shown and specified in the Contract Documents. This would include a section for "Smart Tags" and related tag guidelines including but not limited to Piping ID, Exit Signs, Safety Signs, Right-to-know labels and tags.	
18	Submittal Packaging	• Package submittals to facilitate quick reviews. • Consider a list of unique submittal packages required (e.g., material data, seismic calcs, testing plan, test results, Certificate of Proper Installation (COPI), warranty cert, O&M, etc.	

		LAST UPDATED	Sep 1, 2025
Clause	**Parameter**	**Criteria**	**Notes**
		• Consider grouping submittals by facility, if multiple facilities. • Requirements should state that submittals should be "submitted and approved" prior to scheduling of shipping, testing, etc.	
19	Use Definitive Contractual Language	▪ Avoid the use of nondefinitive terms such as "should, may, etc." ▪ Define "By others" in bid documents; it is either Contractor or IEUA. These are typically a carryover from manufacturers' drawings.	
20	Prevent Damage to Metal surfaces during Unloading	Contractor shall use nylon straps for handling of all stainless steel, aluminum, and coated equipment and construction elements as to not damage the finish.	
21	SDTI	The CONTRACTOR shall compile a detailed list of all items of work which must be accomplished during any shutdown. The CONTRACTOR shall coordinate their Work to minimize the required number of shutdowns by accomplishing as many tasks as possible during each shutdown period. The CONTRACTOR shall submit this list of items to IEUA for their review as a part of the construction schedule. The schedule shall indicate all periods and duration of each proposed shutdown and the items of work which will be accomplished. The CONTRACTOR shall make specific written requests for all shutdowns that shall include a complete detailed plan of the CONTRACTOR's proposed activities including schedule, manpower, equipment, materials and methods which will be utilized to perform the required work during the proposed shutdown. If, in the opinion of IEUA, the CONTRACTOR's proposed plan is insufficient to successfully complete the required work during the period of the	

			LAST UPDATED Sep 1, 2025
Clause	**Parameter**	**Criteria**	**Notes**
		shutdown, the CONTRACTOR shall make the appropriate revisions in their proposed plan to the satisfaction of IEUA. IEUA reserves the right, at its sole discretion, to cancel any planned shutdown at any time for safety or operational reasons. A canceled shutdown will not constitute the basis for an increase in compensation due the CONTRACTOR.	

Inland Empire Utilities Agency
A MUNICIPAL WATER DISTRICT

Engineering Design Guidelines

Section 2- Mechanical

AVAD ENGINEERING

Section 2 Mechanical

Inland Empire Utilities Agency
A MUNICIPAL WATER DISTRICT

2.1 General Mechanical Requirement

2.1 General Mechanical Requirement

			LAST UPDATED Sep 1, 2025
Item	**Parameter**	**Criteria**	**Notes**
0	Scope	This document applies to General Mechanical Requirements	
1	Stainless Steel Treatment	All fabricated stainless steel shall be pickle and passivated (P&P) to ASTM380 to remove free iron, heat tint oxides, weld scale, and other impurities. P&P shall be done by full emersion of fabricated parts.	
		SST items include: piping, structural elements, supports, fabricated items. cut items, and other parts. Field cutting and drilling of holes in SST boxes or fabricated items shall be field cleaned and P&P. Field cutting shall be approved on a case by case basis.	
2	PVC Flanges and Plastic Flanges	Vanstone flanges are NOT allowed	IEUA experienced multiple failures including buried conditions. Any shifts resulted in a crack in the flange at the connection to the pipe.
3	Factory Acceptance Testing (FAT)	Contractor shall certify, a minimum of 48 hours before the date of the FAT witness by IEUA, that all manufacturer QC activities and the approved factory test plan have been successfully completed without failures/deficiencies/damage/incompleteness /not passing. Contractor shall submit successfully completed, signed off factory test(s) by the manufacturer to IEUA. If not provided, IEUA can cancel the FAT witness and Contractor shall be responsible for all costs and impacts associated with rescheduling the FAT witness.	This is applicable to all FAT witness of mechanical equipment, electrical equipment, control panels, systems, etc.
4	Mechanical Equipment Installation Tolerances	Tolerances for all installations by Contractor of mechanical equipment (valves, gates, flowmeters, pumps, blowers, etc.) shall be	

			LAST UPDATED Sep 1, 2025
Item	**Parameter**	**Criteria**	**Notes**
		within allowable manufacturers' requirements.	
5	Material Selection	Select material and coating appropriate for the operating conditions. Corrosive environments require higher grade material and coating.	
6			

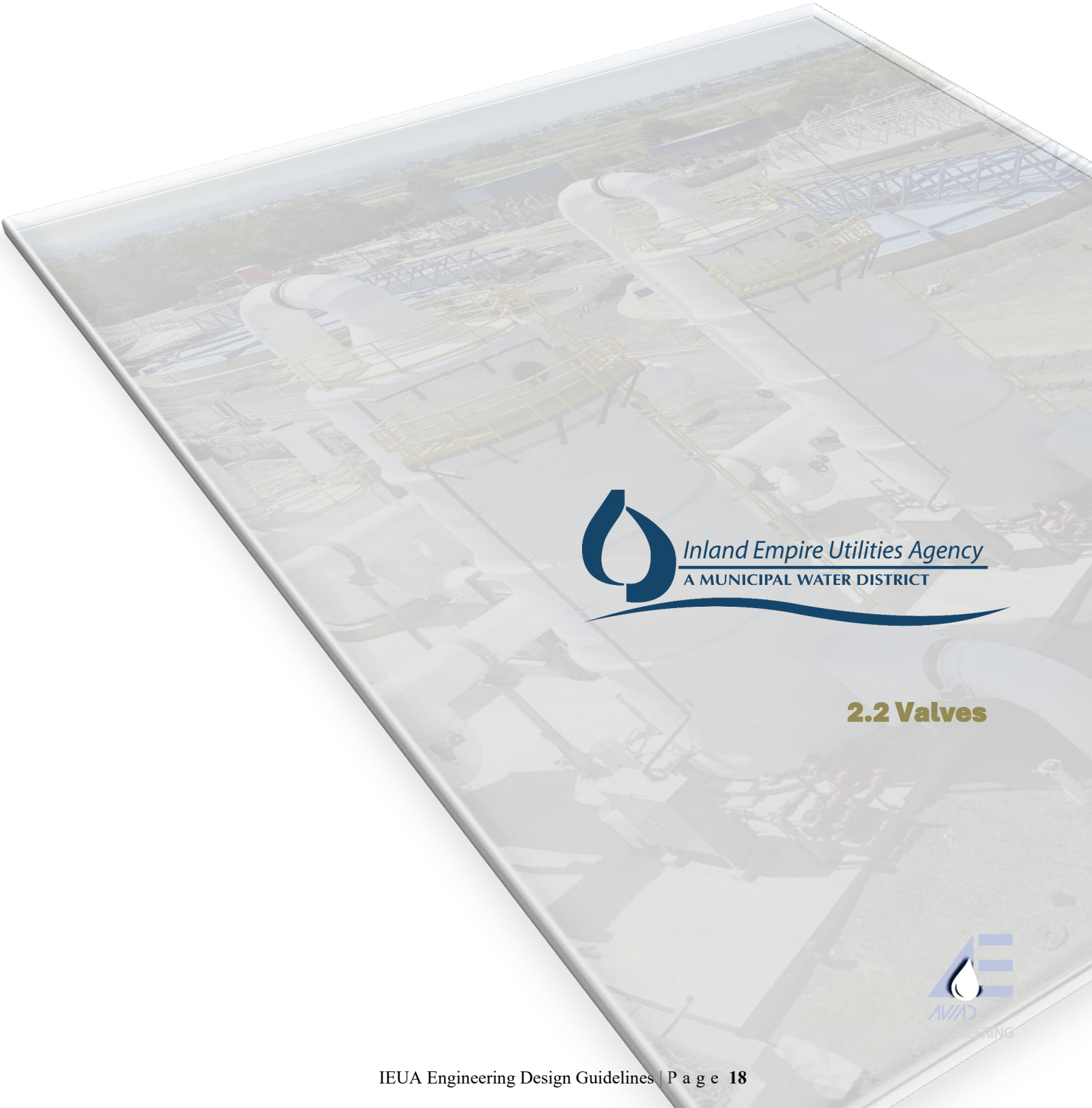

Inland Empire Utilities Agency
A MUNICIPAL WATER DISTRICT

2.2 Valves

2.2 Valves

2.2.1 Valves, General

LAST UPDATED			Sep 1, 2025
Item	**Parameter**	**Criteria**	**Notes**
0	Scope	This document applies to all valves.	
1	Valve Location	Valves shall be accessible (i.e., not buried, with chain operator or valve box), unless otherwise necessary and noted. Valves shall be installed in locations with enough room for maintenance personnel to maintain valves with the proper equipment. Minimize locating valves with actuators in classified areas, when possible.	Review Recycled Water Guidance Drawings RW-5, RW-6, and RW-7c.
2	Valve and Gate Automation	Apply automation on critical pipes and channels to enhance equipment O&M.	Automation and connection to SCADA is preferred.
3	Valve Maintenance	Incorporate dismantling joints into design layout to ease removal of valves.	
		Consider access hatches, rollup doors, and lifting devices for large and critical valves.	
4	Actuator Type	Incorporate pneumatic actuators for proportional control (modulating) valves and gates, unless otherwise noted or not available.	Provide chain operator for valves over 6-ft high. Provide a Babbitt Bucket, or similar device, for clearing the walkway below of the excess chain.
		Buried valves shall have extension stems to grade with square nuts and cast iron or steel pipe extensions. Stem supports shall prevent shearing of the stem.	
5	Actuator Sizing	Oversize actuator to allow for aging/corrosion/scaling/ clogging of equipment.	
6	Surge Control	Specify speed of opening and closing to avoid significant increase in pressures.	

LAST UPDATED			Sep 1, 2025
Item	**Parameter**	**Criteria**	**Notes**
7	Factory Testing Data	Submit Factory Acceptance Test data before shipment of the valve. The data shall also include certification of quality and test results for factory-applied coatings.	
8	Labeling and Valve Tags	Label all valves with manufacturer's name and working pressure cast in raised letters on valve body.	
		A Type 316 SS tag that includes the valve Reference Number shall be mounted to the valve with Type 316 SS attachments.	
9	Painting and Coating (General)	Required for the exterior surfaces of valves.	
		Required for the wet interior surfaces of ferrous valves.	
	Painting and Coating (Buried Valves)	Epoxy coated and wrapped with polyethylene encasement; minimum of 8 mils DFT.	Exterior of all buried valve shall be coated with 8 mils of two-part epoxy coating.
	Painting and Coating (Above-ground Valves)	Ferrous interior surfaces: Fusion Bonded Epoxy; minimum of 10 mils DFT.	.
		Ferrous exterior surfaces: Fusion Bonded Epoxy; minimum of 10 mils DFT.	Exterior of valve above ground shall be coated with standard factory enamel paint to be top coated in the field by the Contractor
		Non-ferrous surfaces: Coat machined, polished, and non-ferrous surfaces (including gears, bearing surfaces and similar unpainted surfaces) with corrosion prevention compound which shall be maintained during storage and until equipment begins operation.	
10		Conduct on closed valves.	

LAST UPDATED			Sep 1, 2025
Item	**Parameter**	**Criteria**	**Notes**
	Pressure Testing, Field	Test system at pressure equal to 1.5 of design pressure. Maximum system pressure test shall not exceed valve manufacturer's maximum pressure limit.	
11	Bolts, Nuts, Studs, Washers, Gaskets	All bolts, nuts, studs and washers shall be of Type 316 stainless steel. Buried service shall be stainless-steel 316 with bituminous coating	
		Gaskets shall be full-face type. Gasket material shall conform to manufacturer's recommendations.	
12	End Connections	2.5-inch and smaller may be provided with threaded or flanged end connections	
		3-inches and larger require flanged end connections	
		Unless otherwise shown or otherwise specified, all flanged valves shall have ends conforming to AWWA C115, 125 lb. flange.	
13	Manufacturer	A single manufacturer shall be made responsible for coordination of design, testing, and furnishing each valve.	Provide a list of local installations.
		Where 2 or more valves of the same type and size are required, the valves shall be furnished by the same manufacturer.	
		Shall have a successful record of not less than 5 years in the manufacture of the valves indicated	
		Require manufacturer to provide Certificate of Proper Installation.	
14	Position Indicator	Provide valve position indication: parallel arrow = open, perpendicular arrow = closed.	

2.2.2 Gate Valves

LAST UPDATED	Sep 1, 2025

Item	Parameter	Criteria	Notes
0	Scope	This document applies to gate valves.	
1	Type	Types: -Resilient-seated (conform to AWWA C509). -Metal-seated double disk	
2	Manufactures	Manufacturers: DeZurik. -Or equal	
3	Pressure	Rated 250 PSI.	Minimum.
4	Materials	Body: -Ductile iron. Trim: 316 SS	
5	End Connections	Type: -Exposed: flanged ends conforming to ANSI B16.1, Class 125, unless otherwise specified. -Buried: mechanical joint ends conforming to ANSI A21.11. Bell and spigot end connections by IEUA approval only.	
6	Size	Maximum 16”.	

2.2.3 Check Valves

LAST UPDATED			Sep 1, 2025
Item	**Parameter**	**Criteria**	**Notes**
0	Scope	This document applies to swing check, slanting disc, chemical check, and air service check valves.	
1	Swing Check	Type: -Full opening passages. -Flanged cover piece (for access to disc). -Outside lever and spring. -Air cushioned or hydraulic cushioned, controlled closing.	
		Size: 3-inches and larger.	
		Pressure: Rated 250 PSI working pressure.	
		Manufacturers: APCO/DeZurik. -Or equal	
		Body: Heavy Cast or Ductile Iron.	
2	Slanting Disc	Type: -55 degree seating angle. -Guaranteed not to stick in closed position. -Flanged connections for Dashpot or Hydraulic Snubber. -Position indicator.	
		Pressure: Rated 250 PSI working pressure.	
		Manufacturers: APCO/DeZurik. -Or equal	
		Body: Ductile Iron, Carbon Steel, and Stainless Steel.	
3	Chemical (Type Check Valve)	Type: -Self-contained, straight-through design. -Used for all liquid chemical feed systems.	
		Material: Chlorinated poly(vinyl chloride (CPVC), conforming to ASTM8F441.	

LAST UPDATED			Sep 1, 2025
Item	**Parameter**	**Criteria**	**Notes**
		Manufacturers: Ryan Herco. -GF Plastic Systems. -Asahi/America. -Or equal	
4	Air Service (Type Check Valve)	Type: -Double Door Check Valve. - Wafer or Lugged Style -Operate without hammer or shock. -Spring loaded. -Normally closed.	
		Body: 316 Stainless Steel.	
		Manufacturers: APCO/DeZurik. -Or equal	
		Hinge and stop pins 316 SS.	
5	End Connections (all check valve types)	Flanged (conforming to ANSI/ASME B16.1), Class 125, unless otherwise shown or otherwise specified	
6	Position Switches (all check valve types)	Housing: 316 Stainless Steel.	
		Manufacturers: -Westlock Silver Bullet Model 316. -Or equal.	

2.2.4 Double Offset Butterfly Valves

LAST UPDATED			Sep 1, 2025
Item	**Parameter**	**Criteria**	**Notes**
0	Scope	This section applies to all types of double offset butterfly valves for reclaimed water applications	Double Offset, AWWA
1	Materials	Ductile Iron Body (A536 65-41-12)	
		Flanged End Connection (AWWA)	
		Shaft Seal: Dry Shaft or Wet Seal	EPDM O-rings or Chevron V-Type Packing (pressure energized seal only)
		Trim: 316 SS	
2	Size	8” and above	6” and under refer to Gate Valve Guidelines
3	Maximum Flow Velocity	16 fps (Bi-Directional Sizing Required)	
4	Manufacturers	DHC (BTD), VAG (EKN AWWA), or IEUA pre-approved equal	
5	Pressure Class	Class 250B and Class 150B Class 250 with ANSI 125 flanges (Back Spotting of Flanges Required)	
6	Disc	Ductile iron ASTM A536 65-45-12, 316 Stainless Steel	
		Double offset disc design for all valves	
		Prior to application of required coating install stainless steel seat edge (where applicable).	
		Mechanically secured to shaft with Type 304 stainless steel, straight through taper pins and locking nuts (where applicable).	Material selection for pins shall be based on pressure class
		No travel stops for disc on interior of body	
		Bubble tight with rated pressure applied from either side of valve.	
		Bi-directional for control of flow from either direction.	
7	Rubber Seats	Rubber seats shall be in-body or disc and the retainer shall be a (1-piece) 316 stainless steel seat retainer.	

LAST UPDATED			Sep 1, 2025
Item	**Parameter**	**Criteria**	**Notes**
8	Disc Seating Edge	Type 316 Stainless Steel or Nickel Aluminum Bronze.	
		Seat shall completely cover and envelope the entire leading edge of the disc.	
		Valves disc that do not completely cover the disc edge or that have coated disc edges are not acceptable.	
9	Shaft Seals	Shaft seals shall be EPDM O-ring or Chevron V-type pressurized seals only.	
10	Operators	Sized for bi-directional flow AWWA Worm Gear: 300 ft-lb input torque to stop	
11	Input Torque	Required input torque with maximum hand wheel pull of 80lbs and 150 ft. lbs. for 2" operating nuts. Per AWWA C504	
12	Gear Reducers	Totally enclosed, permanently lubricated and sealed gear reducers.	
		Self-locking with open and close stops provided to limit valve disc travel.	
		Worm Gear (SAMBO AWWA or IEUA pre-approved equal).	
		Buried service gears shall be minimally 90% grease packed with a generous slathering of all interior surfaces.	
		Submit calculations for valve torque requirements to Engineer as part of Shop Drawing submittal package. Velocity for dynamic torque must be 16 fps.	Mill Test Reports Shall Be Required for Plain Stem Valve Metallic Components (Operators Excluded)
13	Compliance	Compliant with AIS requirements (for SRF AIS Funding) - Manufactured using Iron and Steel products produced in the United States.	
		In Accordance with AWWA C504.	

2.2.5 Pressure Reducing/Pressure Relief Valves

LAST UPDATED			Sep 1, 2025
Item	**Parameter**	**Criteria**	**Notes**
0	Scope	This document applies to pressure reducing, pressure sustaining, flow control, level control, and pressure relief valves.	
1	Type	Single diaphragm globe or angle valve.	
		Hydraulically operated, adjustable, pilot controlled.	
		Add anti-cavitation trim, surge anticipator where required.	
2	Materials	Body Materials: Ductile Iron (ASTM A 536).	
		Trim: 316 SS.	
3	Pressure	Rated: 250 PSI.	
4	Manufacturers	Manufacturers: Cla-Val Company. -Or equal	

2.2.6 Diaphragm Valves

LAST UPDATED			Sep 1, 2025
Item	**Parameter**	**Criteria**	**Notes**
0	Scope	This document applies to diaphragm valves.	
1	Service Types	<u>Service Types:</u> -Chemical. -Water.	
2	Body	Materials: PVC; CPVC; PVDF; and 316SS where appropriate..	
3	Diaphragm	<u>Materials:</u> -EPDM. -TFE	
4	Manufacturers	<u>Manufactures:</u> -ITT Grinnel. -Asahi/America. -Hayward -RG Sloane -Chemtrol -	

2.2.7 Air Release and Vacuum Valves

LAST UPDATED			Sep 1, 2025
Item	**Parameter**	**Criteria**	**Notes**
0	Scope	This document applies to air release, air and vacuum, and combination air valves.	
1	Air Release Valve (ARV)	Type: Float operated, compound lever.	
		Include isolation valve to allow removal of valve without shutting down the equipment.	
2	Air and Vacuun Valves (AVV)	Float has no direct contact with air and water.	
		Float is centered or peripheral guided for positive shutoff into seat.	
		Seat shall be fastened into the valve cover.	
3	Combination Air Valves (CAV)	Type: Single-body construction designed to provide all functions within one housing.	
4	Air Valve for Vertical Turbine Pumps	<u>Types:</u> -3-inches and smaller: AVV with throttling device. -4-inches and larger: Dual body CAV mounted on top of surge check.	
5	Pressure	See Air Valve Sizing Table in 2.1.8	
6	Materials	Body: Cast Iron, Ductile Iron, Stainless steel or composite materials.	
		Trim: 316 SS.	
7	Manufacturers	<u>Manufacturers :</u> -A.R.I. Flow Control Accessories. -See Section 2.2.8.	

2.2.8 Air Valve Sizing

LAST UPDATED				Sep 1, 2025
Air Valve Sizing				
Service	**Valve Type**	**Pressure Range**	**Manufacturer and Model**	**Notes**
Potable / Reclaimed Water	ARV	≤ 150 PSI	-A.R.I. S-050	
		> 150 PSI	-A.R.I. S-015	
		> 500 PSI	-A.R.I. S-016	
	AVV	≤ 150 PSI	-A.R.I. K-060	
		> 150 PSI	-A.R.I. K-060	K-060 (3-232 psi) K-060 HF/K-062 (3-360 psi) K-064 (3-580 psi)
		> 500 PSI	-A.R.I. K-064	
	CAV	≤ 150 PSI	-A.R.I. D-040	
		> 150 PSI	-A.R.I. D-060-C HF	D-060-C HF/D-062 HF (up to 360 psi)
		> 500 PSI	-A.R.I. D-064-C HF	
Sewer / Wastewater Treatment Plants	ARV	≤ 150 PSI	-A.R.I. S-020/S-021/S-025 Family	Small-orifice ARVs aimed at potable service (S-050) can foul quickly on WWTP headers. The S-020 / S-025 / D-023 families keep the orifice

LAST UPDATED				Sep 1, 2025
Air Valve Sizing				
Service	**Valve Type**	**Pressure Range**	**Manufacturer and Model**	**Notes**
				out of the flow path and add an internal "rolling seal" to shed grease and rags.
	AVV	≤ 150 PSI	-A.R.I. K-020	
	CAV	≤ 150 PSI	-A.R.I. D-023	

2.2.9 Plunger Valves

		LAST UPDATED	Sep 1, 2025
Item	**Parameter**	**Criteria**	**Notes**
0	Scope	This document applies to plunger valves.	
1	Manufacturers	VAG-Armaturen.	
		Minimum 7 years of continuous product history in the USA, 10 years total experience, and 25 installations in US.	
2	Performance	Capable of throttling to 0.1 cfs flow control setpoint.	
3	Noise	Max operating noise: 55 decibels at 150 feet away.	
		Sound attenuation jacket is permitted to limit noise.	
4	Type	Internal slider-crank mechanism.	
5	Size	6”, Minimum.	
6	Materials	Body: Ductile iron.	
		Trim: 316 SS.	

2.2.10 Plug Valves

		LAST UPDATED	Sep 1, 2025
Item	**Parameter**	**Criteria**	**Notes**
0	Scope	This document applies to plug valves.	
1	Manufacturers	Manufacturers: DeZurik. -Or approved equal	
2	Performance	Full Compliance to AWWA C517 (Resilient-Seated Cast-Iron Eccentric Plug Valves) Flushing Body 150 psi Shutoff Pressure rating for both uni-directional and bi-directional Every Valve is Seat and Shell Tested	
3	Body	ASTM A126 Class B cast iron	
4	Port	80-92 % Port Area	Induces higher headloss than full port, but has longer service life. Apply for non-sludge or grit applications.
		Full Port (100% Port)	Consider 100% Port for sludge or grit applications.
5	Seat	Raised Welded Nickel Seat 1/8-inch minimum thickness welded overlay seat of not less than 95% pure nickel. Seat area shall be raised, with raised surface completely covered with weld to ensure that the plug face only contacts a nickel surface. Use CR (Chloroprene Rubber, Neoprene) for any digester gas valve applications. Use Buna-N for other applications.	
6	Packing	Multiple V-Ring or U-Cup self adjusting	Non-adjustable packing shall not be acceptable
7	Bearings	Sintered 316 Stainless Steel	
8	Grit Seals	Trunnion Top and Bottom	
9	Gear	Worm gear	

2.2.11 Sluice/Slide Gates

		LAST UPDATED	Sep 1, 2025
Item	**Parameter**	**Criteria**	**Notes**
0	Scope	This document applies to sluice or slide gates.	
1	Design Requirement	The design requirements for the slide, frame and guides shall be either "Standard" or "Heavy Duty". The design shall meet the requirements of AWWA C561, latest edition,	
		The "Standard" or "Heavy Duty" gate design shall be determined by the "gate factor"	
		The "gate factor" is the product of the width times the design head	
		If the "gate factor" exceeds 120, the "Heavy Duty" design shall be used.	
		The "Heavy Duty" gate may also be selected regardless of the "gate factor" number, if it is designated in the Gate Schedule	
2	Manufacturers	- Waterman	
		- Whipps	
		- Fontaine-Aquanox	
		-Or approved equal	
3	Materials	Body: Stainless Steel, Type 316.	Type of material should be reviewed for suitability for environment. 316 L should be used for all welded components
		Gate: Stainless Steel, Type 316.	
		Trim: 316 SS.	
		Slide gates, seals: - UHMWPE for sides and top - Neoprene or EPDM for bottom	
4	Operational Reliability	**Failure-free operation:** The gate must operate reliably without sticking, jamming, or requiring excessive force to open or close. **Water-tightness:** Sealing surfaces and mechanisms must prevent leakage, particularly under varying pressure conditions. **Corrosion resistance:**	

		LAST UPDATED	Sep 1, 2025
Item	**Parameter**	**Criteria**	**Notes**
		The gate and its components must be made of materials that can withstand the corrosive effects of the fluid and environment it will be exposed to.	
5	Structural Integrity and Load Bearing	**Structural stability:** The gate must be designed to withstand various loads, including hydrostatic pressure from the water column, dynamic forces, and any other anticipated loads. **Gate thickness and beam design:** The thickness of the gate and the design of supporting beams must be sufficient to handle anticipated loads without excessive deflection or deformation.	
6	Flow Control and Performanc	**Accurate flow regulation:** The gate must be designed to control flow rates and pressures effectively, allowing for precise adjustment of water levels. **Gate size and shape:** The size and shape of the gate must be appropriate for the intended application, considering factors like flow rate, pressure, and space constraints. **Sealing mechanisms:** The sealing mechanisms (e.g., rubber seals, wedging devices) must be reliable and effective in preventing leakage.	
7	Heavy Duty Frame	Formed Stainless Steel Plate and/or structural members to provide rigid, one-piece frame.	
		Minimum section thickness of all members shall be 1/4-inch. When the “gate factor” exceeds 240, minimum section thickness of all members shall be 3/8-inch.	

		LAST UPDATED	Sep 1, 2025
Item	**Parameter**	**Criteria**	**Notes**
8	Gates: Standard Slide	Deflection shall not exceed 1/720 of the span of the gate or 1/16" whichever is less, when under the maximum design head	
		Design for the maximum design head specified, with a minimum safety factor of 4 with regard to ultimate tensile, compressive and shear strengths published in the referenced ASTM material standards.	
9	Gates: Heavy Duty Slide Design	Minimum section thickness of all members, except seal retainers, shall be 1/4-inch. When "gate factor" exceeds 240, the minimum section thickness of all members, except seal retainers, shall be 3/8-inch.	
		Heavy Duty slide shall include an increased section at insertion into the guides (thick-edge design). When the "gate factor" exceeds 120, the minimum gate edge thickness inserting into the guide groove shall be a 1 ½" plate, or a boxed fabrication, suitably designed, to achieve for each foot of slide height a minimum section modulus of 3.50 $inch^3$ as well as at sections through the horizontal ribs. When the "gate factor" exceeds 240, the minimum gate edge thickness inserting into the guide groove shall be a minimum 2" thick plate, or a boxed fabrication, suitably designed, to achieve for each foot of slide height, a minimum section modulus of 7.00 $inch^3$ as well as at all sections through the horizontal reinforcement ribs.	
10	Seals	Seal shall be self-adjusting - UHMWPE for side and top seals - Shall be neoprene or EPDM for bottom seals.	

		LAST UPDATED	Sep 1, 2025
Item	**Parameter**	**Criteria**	**Notes**
11	Stems	Stem diameter, stem guide quantity and stem guide spacing shall provide a slenderness ratio (l/r) not exceeding 200 Tensile strength shall be suitable to withstand the stem design force, as defined in AWWA C561, with a safety factor of 5 on the ultimate tensile strength published in the referenced ASTM material standards	
		Compressive strength shall be suitable to resist buckling at two times the stem design force, as defined in AWWA C561. Determine critical buckling load using Euler Column formula defined in AWWA C561, where C=2 Gates having width greater than 2 times the height shall be provided with 2 stems and 2 lifting mechanisms connected by a tandem shaft.	

2.2.12 Miscellaneous Valves

			LAST UPDATED Sep 1, 2025
Item	**Parameter**	**Criteria**	**Notes**
0	Scope	This document applies to ball valves; solenoid valves; and pet cocks.	
1	Ball Valves	General: Line size ball valve and union shall be installed upstream of each solenoid valve, in-line flow switch, or other in-line electrical device for isolation during maintenance.	
	PVC Ball Valves (Sizes 1/2-inch to 4-inches)	Materials: Body, ball, stem and connector - Schedule 80 PVC or CPVC.	
		Type: Double block (or full block) designed to prevent seal carrier blow-out.	
		<u>Pressure:</u> -Rated to 150 PSI at 70°F. -90° ON/OFF actuation.	
		<u>Manufacturers:</u> -Hayward (Sizes 1/2-inch to 4-inches). -Spears. -M&T Plastic Inc. (Sizes 1/2-inch to 6-inches) -The Harrington Corp. (Sizes 1/2-inch to 4-inches). -Ryan Herco Products Corp. (Sizes 1/2-inch to 4-inches). -or approved equal.	
	Bronze or SS Ball Valves (Sizes 1/2-inch to 4-inches)	<u>Type:</u> -For general water and air service. -Top entry type. -Screwed ends. -Full bore ports. -Hand lever operators.	
		<u>Materials:</u> -All-bronze or SS. -Teflon seats.	
		Pressure: Minimum rating of 250 PSI for Bronze or 1,000 PSI WOG (cold, non-shock).	

		LAST UPDATED	Sep 1, 2025
Item	**Parameter**	**Criteria**	**Notes**
		Manufacturers: -Apollo Ball Valve Division. -Or equal.	
2	Solenoid Valves	Type: -Two-way, normally closed (i.e., closes when de-energized). -Packless construction. -Threaded ends. -Threaded conduit connection. -Strainer to be installed upstream of each valve.	
		Materials: -Seat: Resilient Buna "N" and Teflon. -Body: Forged brass or stainless steel body and ball where appropriate -Internal parts (in contact with fluid): Series 300 and 400 stainless steel.	
		Manufacturers: ASCO/DeZurik. -Or equal	
3	Pet Cocks (2.5-inch and smaller)	Provide lever or tee handle operator.	
		Materials: All brass (ASTM B 16).	
		Manufacturers: Lunkenheimer Figure 478 or 479. -Or equal	

2.2.13 Valve Actuators

		LAST UPDATED	Sep 1, 2025
Item	**Parameter**	**Criteria**	**Notes**
0	Scope	This document applies to all valve actuating equipment. This includes manual and automated electric and pneumatic actuators.	
1	Chain actuators	Required for manual shut-off valves mounted higher than 6-feet above working level.	
2	Spur Gear and Hand wheel	<u>Required for:</u> - 8-inches and larger. -Where chain actuator is required.	
3	Automated Electric Actuators	Manufacturers: AUMA. -Or equal	Must meet area classification requirements.
4	Automated Pneumatic Actuators	Manufacturers: Fisher. -Or equal	
5	Manual Operator (exposed)	<u>Types:</u> -Worm gear drive and nut. -Hand wheel or chain.	
		Chain wheel, sprocket, and aluminum chain required if mounted more than 6 feet above the operating floor.	
6	Manual Operator (buried valves)	Provide valve box, 2-inch square operating nut, and position indicator.	
		Extension: required if top of valve nut is greater than 12-inches below top of valve box.	
7	Valve Boxes (buried valves)	Material: -Cast iron. -Concrete. -Or similar.	
		Cover Size: allow operation of valve actuators.	
		<u>Cover Marking:</u> -Potable Water: IEUA Water. -Recycled Water: IEUA RW. -Sanitary Sewer: IEUA Sewer.	

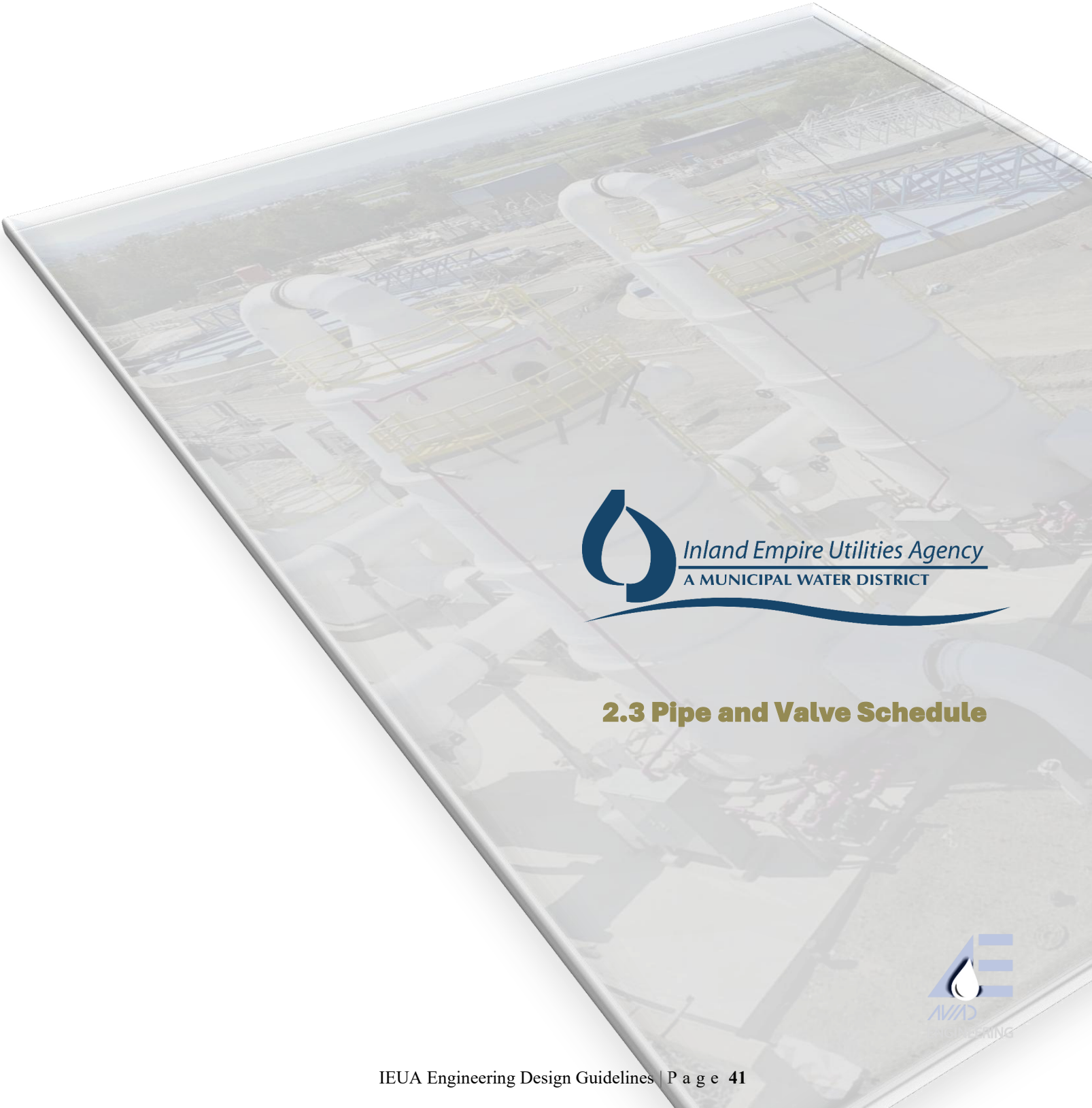

Inland Empire Utilities Agency
A MUNICIPAL WATER DISTRICT

2.3 Pipe and Valve Schedule

2.3 Pipe and Valve Schedule

LAST UPDATED			Sep 1, 2025
Item	**Pipe Material**	**Preferred Type of Valve**	**Preferred Manufacturers**
Process (> 3")			
FORCEMAIN	HDPE, Steel, Ductile Iron, ANSI A21, 51 (AWWA C151) AWWA C900	Plug	DeZurik, or equal
INFLUENT / EFFLUENT	Steel, AWWA C200, Welded.	Plug (in vault),	DeZurik, or equal
		Gates (Knife)	Waterman, Fontaine-Aquanox
FILTER INFLUENT		Plug (in vault)	DeZurik, or equal
SECONDARY EFFLUENT		Plug (in vault)	DeZurik, or equal
TERTIARY EFFLUENT		Plug (in vault)	DeZurik, or equal
WASTE BACKWASH OVERFLOW		Plug (in vault)	DeZurik, or equal
FINAL EFFLUENT		Plug (in vault)	DeZurik, or equal
		Gates	Waterman, Fontaine-Aquanox
RECYCLED WATER		Plug (in vault)	DeZurik, or equal
		Gates	Waterman, Fontaine-Aquanox
AERATION BASIN EFFLUENT		Plug (in vault)	DeZurik, or equal
		Gates	Waterman, Fontaine-Aquanox
INTERMEDIATE EFFLUENT		Plug (in vault)	DeZurik, or equal
		Gates	Waterman, Fontaine-Aquanox
PRIMARY EFFLUENT	Steel, AWWA C200, Welded or Ductile Iron, ANSI A21, 51 (AWWA C151).	Plug (in vault)	DeZurik, or equal
SLUDGE / SCUM / FROTH	Ductile Iron, ANSI A21, 51 (AWWA C151), Glass-lined or Steel Sch. 40, ASTM A120, Glass-lined, HDPE (below ground only).	Plug	DeZurik, or equal
CIRCULATED SLUDGE		Plug	DeZurik, or equal
RAW SLUDGE		Plug	DeZurik, or equal
THICKENED SLUDGE		Plug	DeZurik, or equal
MIXED LIQUOR		Plug	DeZurik, or equal

LAST UPDATED Sep 1, 2025			
Item	**Pipe Material**	**Preferred Type of Valve**	**Preferred Manufacturers**
RAS / WAS / SUPERNATANT	Ductile Iron, ANSI A21, 51 (AWWA C151), Glass-lined, HDPE (below ground only).	Plug	DeZurik, or equal
THICKENER PRESSURIZED RECYCLE		Plug	DeZurik, or equal
THICKENER SUBNATANT		Plug	DeZurik, or equal
DIGESTER SUPERNATANT		Plug	DeZurik, or equal
CENTRATE	Ductile Iron, ANSI A21, 51 (AWWA C151), Glass-lined or PVC, ASTM D2241, HDPE (below ground only).	Plug	DeZurik, or equal
DIGESTED SLUDGE	Ductile Iron, ANSI A21, 51 (AWWA C151), Glass-lined or PVC, ASTM D2241, HDPE (below ground only).	Plug	DeZurik, or equal
SLUDGE FILTRATE	Ductile Iron, ANSI A21, 51 (AWWA C151), Glass-lined or PVC, ASTM D2241, HDPE (below ground only).	Plug	DeZurik, or equal
EMERGENCY BASIN RETURN	Ductile Iron, ANSI A21, 51 (AWWA C151).	Plug	DeZurik, or equal
DRAIN	Ductile Iron, ANSI A21, 51 (AWWA C151).	Plug	DeZurik, or equal
STORM DRAIN	RCP, AWWA C302.	Plug	DeZurik, or equal
STRUCTURE UNDERDRAIN	Ductile Iron, ANSI A21, 51 (AWWA C151).	Plug	DeZurik, or equal
SANITARY SEWER	Extra Strength. PVC or HDPE	Plug	DeZurik, or equal

LAST UPDATED Sep 1, 2025			
Item	**Pipe Material**	**Preferred Type of Valve**	**Preferred Manufacturers**
STRUCTURE UNDERDRAIN COLLECTOR	Ductile Iron, ANSI A21, 51 (AWWA C151).		
PLANT INFLUENT	Glass-Lined Ductile Iron, ANSI A21, 51 (AWWA C151), HDPE (below ground only).	Plug (in vault).	DeZurik, or equal
GRIT SLURRY	Ductile Iron AWWA C151, HDPE (below ground only).	Plug	DeZurik, or equal
Misc. Piping, all sizes			
FUEL OIL RETURN	Steel, ASTM A120; Sch. 40, Black, Welded.	Ball	Watts, Apollo
FUEL OIL SUPPLY		Ball	Watts, Apollo
LUBE OIL		Ball	Watts, Apollo
WASTE LUBE OIL		Ball	Watts, Apollo
HOT WATER RETURN	Steel, ASTM A120, Sch. 40, Black, Welded. Ductile Iron, ANSI A21, 51 (AWWA C151), HDPE (below ground only).	Ball	Watts, Apollo Include insulation in pipe materials for hot water return and supply piping.
HOT WATER SUPPLY	Steel, ASTM A120, Sch. 40, Black, Welded. Ductile Iron, ANSI A21, 51 (AWWA C151), HDPE (below ground only).	Ball	Watts, Apollo Maximum temperature is 200 degrees F Include insulation in pipe materials for hot water return and supply piping.
INSTRUMENT AIR	Stainless Steel 316SS, ASTM A312, Sch. 80.	Ball	Swagelok
DIGESTER GAS (Low Pressure)	Stainless Steel 316SS, ASTM A312, Sch. 10.	Butterfly, Eccentric Plug	DeZurik, or equal
VACUUM	Stainless Steel 316SS, ASTM A312, Sch. 80.	Ball	Swagelok
PLANT AIR	Stainless Steel 316SS, ASTM A312, Sch. 80	Ball	Swagelok
FIRE PROTECTION SPRINKLER SYSTEM	Steel, ASTM A120, Sch. 40, Black.	By Code	By Code

LAST UPDATED Sep 1, 2025			
Item	**Pipe Material**	**Preferred Type of Valve**	**Preferred Manufacturers**
ENGINE COOLING WATER RETURN	Steel, Ductile Iron, ANSI A21, 51 (AWWA C151).		
SUMP PUMP DISCHARGE	Ductile Iron, ANSI A21, 51 (AWWA C151).	Plug	DeZurik, or equal
ENGINE EXHAUST	Steel, ASTM A120, Sch. 40, Black, Welded. Stainless Steel 316SS, ASTM A312, Sch. 40S.	N/A	Caterpillar
	Follow Caterpillar recommendations.		
LIQUIFIED AERATION	Stainless Steel 316SS, ASTM A312, Sch. 40S.	Butterfly, eccentric butterfly	DeZurik, Fisher, or equal
LIQUID PETROLEUM GAS	Steel, ASTM A106 or A53, Sch. 80, Seamless, Black.	By code	
RAIN WATER LEADER	Steel, ASTM A120, Sch. 40, Black, Welded.		
DEFOAMING CHEMICAL SOLUTION	PVC, Sch. 80.	Ball	Asahi/America, Spears
PLANT DRAIN	PVC, Sch. 80 or Ductile Iron, ANSI A21, 51 (AWWA C151).	Plug	DeZurik, or equal
POTABLE WATER	<u>Distraction / Transmission:</u> - PVC (AWWA C900 or C905, CPVC (ASTMF 441), Sch. 80 - Ductile Iron, ANSI A21, 51 (AWWA C151) - Welded Steel <u>Plumbing:</u>		

LAST UPDATED			Sep 1, 2025
Item	**Pipe Material**	**Preferred Type of Valve**	**Preferred Manufacturers**
	- Sch. 80 PVC		
LANDSCAPING SPRINKLER SYSTEM	PVC, Sch. 80 or Copper, ASTM B88, Type K.		
DEMINERALIZED WATER	PVC, Sch. 80 or FRP.	Ball	Asahi/America, Spears
PLANT OVERFLOW	Steel, AWWA C200, Welded or RCP, AWWA C302.	Gates	Waterman, Clow
RAW WATER	Steel, AWWA C200, Welded or RCP, AWWA C302.		
SANITARY DRAINS AND VENTS	Steel, ASTM A120, Sch. 40, Black, Welded.		
SAMPLE LINES (SEE LIST AT RIGHT)	Ductile Iron, ANSI A21, 51 (AWWA C151) or PVC, Sch. 80.	Ball	Swagelok
CHEMICAL DRAIN AND VENT	Polypropylene, ASTM D2146, Sch. 40, Heat Fused Joints or Tempered Class Pipe.	Ball	Asahi/America, Spears
FILTER SURFACE WASH WATER	PVC, Sch. 80.		
UTILITY WATER (NON-POTABLE WATER)	Copper, ASTM B88, Type K or Ductile Iron, ANSI A21, 51 (AWWA C151); Distraction / Transmission: - PVC (AWWA C900 or C905, CPVC (ASTMF 441), Sch. 80 - Ductile Iron, ANSI A21, 51 (AWWA C151)		

LAST UPDATED			Sep 1, 2025
Item	**Pipe Material**	**Preferred Type of Valve**	**Preferred Manufacturers**
	- Welded Steel Plumbing: - Sch. 80 PVC		
FROTH SPRAY	PVC, Stainless Steel 316SS, ASTM A312, Sch. 40S.		
FOUL AIR	FRP.		
Chemical Storage and Feed Facilities			
HYPOCHLORITE	Sch. 80 CPVC. Double contained in buried and unburied locations Wet End Tubing Material: Flex-A-Prene Fittings: PVDF	Ball	Asahi/America, Spears
LIQUID ALUM		Ball	Asahi/America, Spears
AMMONIUM SULFATE			
SODIUM BISULFITE			
CITRIC ACID			
CAUSTIC SODA			
ANTI SCALANT			
BRINE			
POLYMER - ANIONIC		Ball	Asahi/America, Spears
POLYMER - CATIONIC		Ball	Asahi/America, Spears
POLYMER - NONIONIC			
OZONE	PVC, Sch. 80 or Stainless Steel 316SS, ASTM A312, Sch. 10S.		
SODIUM SILICATE	PVC, Sch. 80 or Steel, ASTM A120, Sch. 40, Black, Welded.		
SULFURIC ACID	Stainless Steel 316SS if <10% concentration, ASTM A312, Sch. 40S. Pipe joints to be welded.	PVDF ball or diaphragm valves, or TFE lined steel plugs for >10% acid concentration.	
LIME SLURRY	Flexible Rubber Hose.		

LAST UPDATED			Sep 1, 2025
Item	**Pipe Material**	**Preferred Type of Valve**	**Preferred Manufacturers**
SULFUR DIOXIDE (GAS OR LIQUID STATE)	Steel, ASTM A106 or A53, Sch. 80, Seamless, Black.		
Channel Control/Isolation			
HEADWORKS	N/A	Sluice	Fontaine, Waterman, Whipps

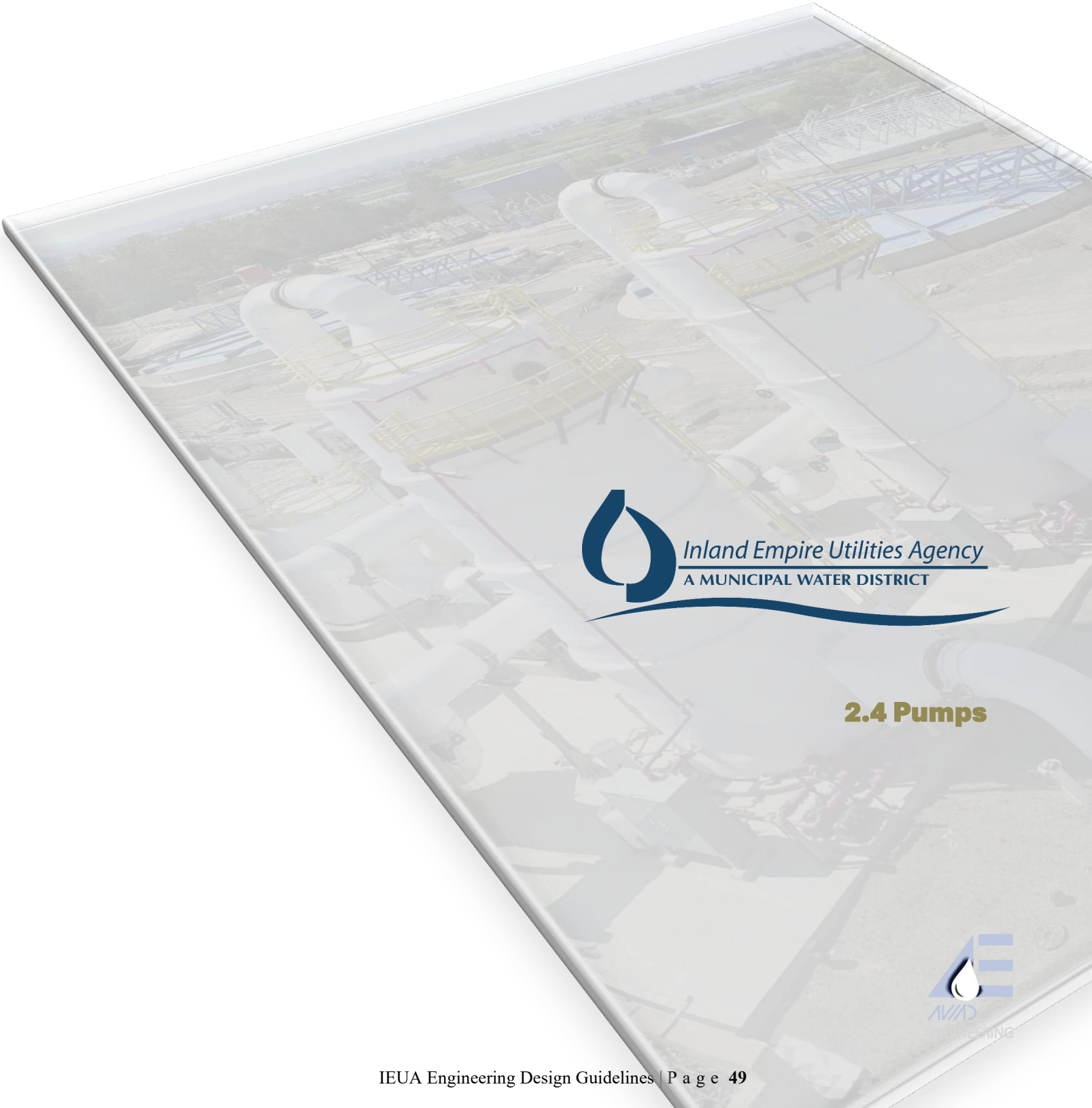

Inland Empire Utilities Agency
A MUNICIPAL WATER DISTRICT

2.4 Pumps

2.4 Pumps

2.4.1 Pumps, General

		LAST UPDATED	Sep 1, 2025
Item	**Parameter**	**Criteria**	**Notes**
0	Scope	This document provides guidelines for general pump requirements, which shall be applicable to pump installations.	
1	Configuration	The pumps and pumping appurtenances shall be by a single manufacturer responsible for furnishing and functional operation of complete pump system.	
2	General	No cavitation shall be allowed in pumps operating within the stable operating range for the specified operating conditions. For the purposes of this provision, cavitation shall be recognized and accepted as being present in a pumping unit if cavitation noise can be perceived either by the human ear or by acoustic instruments or devices. The presence or absence of cavitation noise shall be verified by the AGENCY and/or its consultant during both the factory/field performance tests of the pumps and during operation of the pumps up to the end of the warranty period. To assist in revealing potential cavitation during the factory/field performance tests, in addition to all other required tests, the Manufacturer shall force the pumps to operate at the specified minimum net positive suction head available for each of the following conditions: minimum flow rate, design flow rate and head, and maximum flow rate.	
3	Testing	Engineer to ensure pumps and motors are tested at factory. Minimum of 7 certified sets of test data shall be submitted. Acceptance criteria shall be in accordance with ANSI/HI 14.6" Grade 1U.	Verity the testing range falls within operational performance range Flow ±10%, Head ±6%

		LAST UPDATED	Sep 1, 2025
Item	**Parameter**	**Criteria**	**Notes**
4	Design	Specify pump type and identify process. Specify performance curve and pump data. Specify electrical requirements and controls. Assemble drawings showing location and process. Specify pump drive and motor. Shall require Contractor to produce bearing calculations, indicate points on H/Q curves, pump detailed description, installation drawings.	
5	Stuffing Boxes Mechanical Seal	Where indicated for the pump seal, they shall be of the best quality, using the Manufacturer's suggested materials best suited for the specific application. For drainage and liquids containing sediments, the seals shall be fresh-water flushed, using lantern rings. Unless otherwise specified, the packing material shall be interlaced Teflon braiding, containing 50 percent ultrafine graphite impregnation to satisfy the following: Shaft speeds up to 2500 fpm or Temperatures up to 500 degrees F. Mechanical Seals: rotating balanced O-ring type. Water lubrication - cooling. Materials: Metal parts except springs: 316 stainless steel. Springs: Hastelloy C. Seal faces: Tungsten carbide, except where required for chemical resistance or in the presence of oxidants. In such cases, follow pump manufacturer's recommendation. Elastomers: Viton.	*IEUA : Mechanical Seals Yes – depends where they are – how accessible they are If using mechanical seals, use Couplers or Split Seal if in a location that is difficult to access. On a smaller pump IEUA would want packing (following IEUA approval) Access for repairs should be facilitated for IEUA.
6	Flanges (suction and discharge)	Cast Iron (ANSI/ASME B16.1), Class 25, 125, 250, and 800. Or ANSI/ASME B16.5. Or ASTM A-36 steel plate with a minimum wall thickness of ¼ inch.	

		LAST UPDATED	Sep 1, 2025
Item	**Parameter**	**Criteria**	**Notes**
7	Lubrication	Vertical pump shafts (clean water) - Product water lubricated; Deep-well/dry barrels - Water or oil lubricated bearings, seals, and enclosed line shafts. Vertical propeller, mixed-flow, and turbine pumps or bowl sizes 10-inches and larger (other than deep well pumps) - Stainless steel tube attached to the column for grease lubrication of the bottom bearing	
8	Vortex Suppressors	Provide for vertical pumps with marginal submergence. In accordance with Hydraulic Institute requirements	
9	Pump Casing	Ductile Iron, Austenitic (ASTM A 439).	
		Cast iron, Stainless steel or Bronze.	
		Stainless Steel, Type 416 or 316, SAE63 Bronze.	
		Hot-dipped galvanized (not buried or submerged), stainless steel (buried or submerged).	
10	Pump Guards	All rotating surfaces must be guarded Pump guards are to be provided by the manufacturer	Most guard requirements are written around a point of service -- pumps do not have a point of service

2.4.2 Horizontal Centrifugal Pumps

			LAST UPDATED Sep 1, 2025
Item	**Parameter**	**Criteria**	**Notes**
0	Scope	This document applies to horizontal, variable-speed, nonclor or nonclog mixed flow centrifugal pumps.	
1	Operation	1200* rpm, maximum, ventilated spaces.	*Maximum shaft speed dependent on casing/ impeller diameter
		Waste Activated Sludge or Return Activated Sludge, up to 15,000 mg/l suspended sludge, 6.5-8.5 pH, 50-95 degrees F.	
2	Liquids	Unscreened municipal wastewater solids.	
		Unscreened industrial wastewater solids.	
3	Materials	Casing - Cast iron.	
		Suction and discharge flanges - provide by pressure class.	
		Volute lining - Fusion bonded epoxy.	
		Impeller - Silicon bronze.	
		Shaft - Stainless steel type 316.	
		Bearings - minimum 100,000 hours, grease lubricated.	
4	Drive	Horizontal inverter-duty.	
5	Manufacturers	See Pump Schedule.	

2.4.3 Submersible Sump Pumps

			LAST UPDATED Sep 1, 2025
Item	**Parameter**	**Criteria**	**Notes**
0	Scope	This document applies to submersible sump pumps.	
1	Operation	Intermittent and continuous, submerged.	
2	Liquids	Process water.	
		Surface runoff.	
		Washdown.	
3	Materials	Shaft: Stainless Steel 316.	
		Impeller: cast iron or SAE63 bronze.	
		Seal: mechanical, single or double, in an oil reservoir.	
		Hardware: exposed shall be stainless steel 316.	
		Connection: flange or screw with neoprene pressure hose.	
4	Drive	Submersible electric.	
5	Manufacturers	See Pump Schedule.	

2.4.4 Submersible Wastewater Pumps

			LAST UPDATED Sep 1, 2025
Item	**Parameter**	**Criteria**	**Notes**
0	Scope	This document applies to submersible wastewater pumps.	
1	Operation	Constant speed, on/off cycling, submerged partially submerged or dry condition up to 65' depth.	
2	Liquids	Process drainage from cleaning and maintenance activities, up to 15,000 mg/l suspended sludge, 50-95 degrees F.	
		Unscreened wastewater solids, RAS, WAS.	
	Materials	Casing: Cast iron Class 30.	
		Pump lining - Fusion bonded epoxy.	
		Shaft: Stainless steel 329, 316.	
		Impeller: Cast stainless steel.	
		Seal: tandem double mechanical, in an oil reservoir.	
		Hardware: exposed shall be stainless steel 316.	
		Bearings: bronze.	
		Maximum efficiency, minimum, percent: 65.	
3	Drive	Max motor: 5 hp, 460 v, 1750 rpm.	
4	Manufacturers	See Pump Schedule.	

2.4.5 Sludge Dewatering Piston Pumps

		LAST UPDATED	Sep 1, 2025
Item	**Parameter**	**Criteria**	**Notes**
0	Scope	This document applies to dewatering sludge piston pumps.	
1	Operation	Continuous duty, reciprocating, dual piston, single discharge.	
		Sludge cake, 20-30% solid concentrations.	
2	Liquids	Digested dewatered municipal wastewater sludge.	
		Inorganic solids with moderate abrasive characters.	
3	Type	Pistons: Steel or stainless steel face and core.	
		Piston head: Buna-N (Nitrile) rubber bonded to steel core.	
		Rods: High strength steel, hard chrome plated; or chrome steel.	
4	Drive	TBA	
5	Manufacturers	See Pump Schedule.	

2.4.6 Positive Displacement Rotary Lobe Pumps

		LAST UPDATED	Sep 1, 2025
Item	**Parameter**	**Criteria**	**Notes**
0	Scope	This document applies to positive displacement rotary lobe pumps.	
1	Operation	Polymer.	
2	Mounting	On concrete pad in weather exposed location. Baseplate shall be galvanized.	
3	Materials	Casing: Stainless steel, Type 316.	
		Shaft: stainless steel Type 316.	
		Shaft Sleeve: Stainless steel, Type 316.	
		Pump: Minimum of two tri-lobe rotors driven through positive timing gears, bearing assembly direct.	
		Hardware: Stainless steel, Type 316.	
		Feed Pump: Inverter-duty, NEMA 4X control panel with VFD, 480 Vac.	
4	Manufacturers	See Pump Schedule.	

2.4.7 Progressive Cavity Pumps

		LAST UPDATED	Sep 1, 2025
Item	**Parameter**	**Criteria**	**Notes**
0	Scope	This document applies to progressive cavity pumps for sludge feed service.	
1	Operation	Digested moderately abrasive sludge, organic solids and small inorganic particles, 6-9 pH, 60-105 degrees F.	
2	Materials	Pump body: Cast iron.	
		Shaft: 416 chrome steel or AISI 4120 chromium nitride coating.	
		Rotor and Stator: Two-stage convoluted rotor, convoluted stator.	
		Hardware: Stainless steel, Type 316.	
		Rotor Drive Configuration: Gear joints: Alloy steel, grease lubricated crowned, with ridge spline design. Pivot joints: alloy steel, cartridge design cross journal connected by connecting rod. Pin joints: High temperature grease lubricated, positively sealed and lubricated.	
		Shaft seals and bearings: bearings shall be 100,000 hour minimum, grease lubricated.	
3	Drive	Closed coupled block: direct coupled motor and gear reducer or gear motor Bearing assembly -V-belt: V-belt drive.	
4	Manufacturers	See Pump Schedule.	

2.4.8 Vertical Turbine Pumps

			LAST UPDATED Sep 1, 2025
Item	**Parameter**	**Criteria**	**Notes**
0	Scope	This document applies to vertical turbine pumps.	
1	Operation	Recycled water, 6-8 pH, 50-95 degrees F.	
2	Materials	Pump body: Epoxy-coated cast iron.	
		Shaft: 316 stainless steel.	
		Hardware: Stainless steel, Type 316.	
		Rotor Drive Configuration: Gear joints: Alloy steel, grease lubricated crowned, with ridge spline design. Pivot joints: alloy steel, cartridge design cross journal connected by connecting rod. Pin joints: High temperature grease lubricated, positively sealed and lubricated. Impeller: Silicon bronze	
		Shaft seals and bearings: bearings shall be 100,000 hour minimum, grease lubricated. Seal: Mechanical	
3	Drive	Vertical, solid/hollow shaft, high efficiency & thrust, variable speed.	
4	Manufacturers	See Pump Schedule.	

2.4.9 Centrifugal & Axial Pumps

			LAST UPDATED Sep 1, 2025
Item	**Parameter**	**Criteria**	**Notes**
0	Scope	This document applies to centrifugal and axial pumps.	
1	Operation	Suction speed shall be calculated IAW ANSO/HI 1.3. Suction specific speed shall not exceed 12,500.	
		Return activated sludge, up to 15,000 mg/l suspended sludge, 6.5-8.5 pH, 50-95 degrees F.	
2	Liquids	Unscreened municipal wastewater solids.	
		Unscreened industrial wastewater solids.	
3	Type	Rigid sphere, 3" min passing through the pump from inlet to discharge.	
4	Drive	Electric motors only.	
5	Manufacturers	See Pump Schedule.	

2.4.10 End-Suction Centrifugal Pumps

		LAST UPDATED	Sep 1, 2025
Item	**Parameter**	**Criteria**	**Notes**
0	Scope	This document applies to horizontal, end-suction centrifugal pumps.	
1	Operation	Utility water - potable, recycled.	
		Boiler, heat loops, brine solutions.	
2	Materials	Casing - Cast iron.	
		Suction and discharge flanges - provide by pressure class.	
		Volute lining - Fusion bonded epoxy.	
		Impeller - Silicon bronze.	
		Shaft - Stainless steel type 316.	
		Seals - mechanical.	
		Bearings - minimum 100,000 hours, grease lubricated.	
3	Manufacturers	See Pump Schedule.	

2.4.11 Pumps Schedule

		LAST UPDATED	Sep 1, 2025
Item	**Pump Type**	**Preferred Manufacturers**	**Notes**
Process Stream			
Influent Pumping-Dry Pit	Vertical, non-clog centrifugal.	Flygt non-clog, Vaughan	
Influent Pumping-Wet Well	Submersible.	Flygt, Vaughan, ABS-Sulzer	
Grit Removal	Vortex units followed by grit cyclones and screw Classifiers.	Pista Grit, Evoqua, Smith & Loveless	RP-1 Classifier. Preferred type. Aerated grit chambers are not recommended.
Grit Pump	Recessed Impeller centrifugal with air sparge.		Same as RP-5, Vortex.
	Submersible sump.	ABS-Sulzer	Same at RP-5.
Grit Conveyance	Horizontal screw conveyors.		UHMW replaceable lining. IEUA preference for screw conveyors or cake pumps? IEUA Preferred Manufacturer
Primary Sludge	Progressive cavity.	Seepex, Moyno	Preferred generally-6" piping recommended. Progressive cavity is preferred.
	Centrifugal.	WEMCO Hidrostal non-clog impeller, Vaughan	

		LAST UPDATED	Sep 1, 2025
Item	**Pump Type**	**Preferred Manufacturers**	**Notes**
			Plunger pump is labor intensive from a maintenance perspective. Diaphragm pumps are not recommended for this application due to diaphragm ruptures. High pressure piston pumps are heavy maintenance. Rotary lobe pumps are not good for primaries with ineffective screening.
Scum	Submersible chopper centrifugal.	Flygt non-clog, Vaughan Recirculation, ABS-Sultzer	
		WEMCO Hidrostal.	
Secondary Scum	Submersible chopper centrifugal.	Flygt non-clog, Vaughan, ABS-Sulzer	
Return Activated Sludge (RAS)	Mixed flow.		
	Centrifugal.	Allis Chalmers, Vaughan	
	Vertical Turbine Solid Handling.	Fairbanks Morse	
	Low head propeller (axial flow)		Only to be used with adequate fine screening prior to MBR.
RAS/WAS Sump	Submersible sump.	ABS-Sulzer	
Waste Activated Sludge (WAS)	Centrifugal screw pumps.		
	Centrifugal.	Worthington / Fairbanks Morse.	
Thickened Waste Activated Sludge (TWAS)	Progressive Cavity.	Allweiler, Seepex, Moyno.	Monoflo has not had good longevity.

		LAST UPDATED	Sep 1, 2025
Item	**Pump Type**	**Preferred Manufacturers**	**Notes**
DAF Secondary Thickener Subnatant	Horizontal, Centrifugal, Non-Clog.	Summit, Vaughan, WEMCO.	
Digester Feed Blended Primary/TWAS	Progressive Cavity.	Allweiler, Seepex, Moyno.	
Digester Mixing	Chopper centrifugal.	WEMCO Hidrostal, Vaughan.	
Digester Secondary Heat Loop	ANSI Horizontal end suction.	Aurora.	
Digester Sludge Heating Recirculation	Chopper or screw centrifugal.	WEMCO Hidrostal, Vaughan.	
Digested Sludge Transfer	Progressive cavity.	Allweiler (NEMO, Seepex are both good alternatives), Moyno.	No gear joints, Larger packing water line.
Dewatering Feed	Progressive cavity.	Allweiler.	
	Rotary Lobe.	Vogelsang.	
Dewatered Sludge	Dewater sludge piston.	Schwing Bioset, Putzmiester.	Prefer screw conveyors.
Aeration Basin	Submersible.	ABS-Sulzer	
Return Water	Submersible.	Flygt, Vaughan, ABS-Sulzer	
Primary Heat Loop	ANSI Horizontal end suction.		
Utility Water	ANSI Horizontal end suction.		
Boiler Recirculation	ANSI Horizontal end suction.		
Recycled Water	Vertical Turbine.		

Inland Empire Utilities Agency
A MUNICIPAL WATER DISTRICT

2.5 Chemical Storage and Feed Facilities

2.5 Chemical Storage and Feed Facilities

2.5.1 Chemical Storage and Feed Facilities, General

			LAST UPDATED Sep 1, 2025
Item	**Parameter**	**Criteria**	**Notes**
0	Scope	This document applies to Chemical Storage and Feed Facilities.	
1	Design Approach	Select proper material for chemical compatibility.	
		Define specific safety requirements for chemical handling.	
2	Access	Identify all requirements for maintenance and operations.	

2.5.2 Chemical Metering Pumps

			LAST UPDATED Sep 1, 2025
Item	**Parameter**	**Criteria**	**Notes**
0	Scope	This document applies to Chemical Metering Pumps.	
1	Containment	All pumps shall be contained to prevent chemical spills.	Chemicals to be located in the same containment area shall not pose potential hazards.
		Pump platforms shall be at least as high as containment wall.	
		Use reinforced concrete base or applicable as provided by manufacturer.	
2	Suction	Set tank height so metering pump suction line is full when only a few inches of liquid remain in tank.	
3	Duty / Standby	For 1 to 4 duty pumps per injection point, include 1 standby pump.	
		Standby pump should utilize a common discharge header.	
4	Type	Peristaltic Pump Types (Ferric Chloride, Hypochlorite, Bisulfite, Peroxide, Caustic, Polymer, Other Acids).	
		Equipped with compression rollers that are retractable for tube loading. One roller shall be fully engaged with the tubing at all times to prevent backflow or siphoning.	
		Use no check valves or diaphragms and shall require no dynamic seals in contact with the pumpage.	
		Dry self-priming, capable of being run dry without damaging effects to pump or tube, with a maximum suction lift of 15 feet wc.	
		Chemical metering pumps shall have Ethernet interface with control capability and support for CIP communications with Control Logix.	
	Tubing	Provide a tubing element with molded fittings, which shall be self-locating when fitted into the pump head.	
		Replaceable with no disassembly of the pump head.	

		LAST UPDATED	Sep 1, 2025
Item	**Parameter**	**Criteria**	**Notes**
		Select material and size for the chemical being metered.	
		Supply four tube elements of the specified size per pump.	
5	Manufacturers	Watson Marlow.	
		FLEXFLO by Blue-White Ind.	
		Or equal.	
6	Accessories	Quick disconnect flush connection, Pressure Relief Valve, Pressure Indicator/Pressure Switch High, Calibration Column, Leak Detection.	
	SCADA Indicators	SCADA Guidelines (see Appendices), Leak Detection.	
		Provide per OSHA requirements.	

2.5.3 Chemical Storage Facilities

		LAST UPDATED	Sep 1, 2025
Item	**Parameter**	**Criteria**	**Notes**
0	Scope	This document applies to Chemical Storage Facilities.	
1	Days of Storage	7 days minimum.	15 days max preferred.
		Consider degradation characteristics for chemicals such as Hypochlorite in establishing solution strength and storage requirements.	
2	Accessories	Ultrasonic or radar level sensor.	
3	SCADA Indicators	SCADA Guidelines (see Appendices).	
4	SCADA Alarms	High Level--90 percent. Low Level--15 percent. Low-Low Level--10 percent.	
5	Awning	Provide awning for chemical storage and feed facilities.	Consider access hatches/panels for tank replacements.
		Consider future solar panels in awning design.	
6	Access	Allow proper truck or forklift entry and exit.	
7	Loading Area	Utilize common loading facilities with secondary containment.	
8	Screening/Shade	Consider screening and shade to maintain chemical integrity. This is significant for Hypochlorite solution.	
9	Coating/Painting	Consider chemical compatibility with specified coating and paint.	
		Consider staining property of the chemical when specifying coating and paint	
10	Ladder with Gage	Tanks exceeding 10 feet in height shall be provided with an exterior ladder equipped with a safety cage meeting current OSHA requirements. The ladder shall be Fabricated of fiberglass reinforced plastic shapes.	

		LAST UPDATED	Sep 1, 2025
Item	**Parameter**	**Criteria**	**Notes**
		A clear width of at least 18 inches, with rungs at least ¾ inch diameter and spaced not more than 12 inch apart, and a clearance of at least 7 inches between the back of the ladder and the tank wall.	
11	Safety Handrails and Kickplates	Safety Handrails and Kickplates meeting current OSHA requirements shall be provided around the top of each tank.	
		The handrail shall be attached to the ladder side rails, and anchored to the tank head. A self-closing safety gate shall be provided at the ladder access opening.	
12	Safety Shower/Eye Wash	Provide per OSHA requirements.	

Inland Empire Utilities Agency
A MUNICIPAL WATER DISTRICT

Engineering Design Guidelines

Section 3- Heating, Ventilation, and Air Conditioning (HVAC)

AVAD ENGINEERING

Section 3- Heating, Ventilation, and Air Conditioning (HVAC)

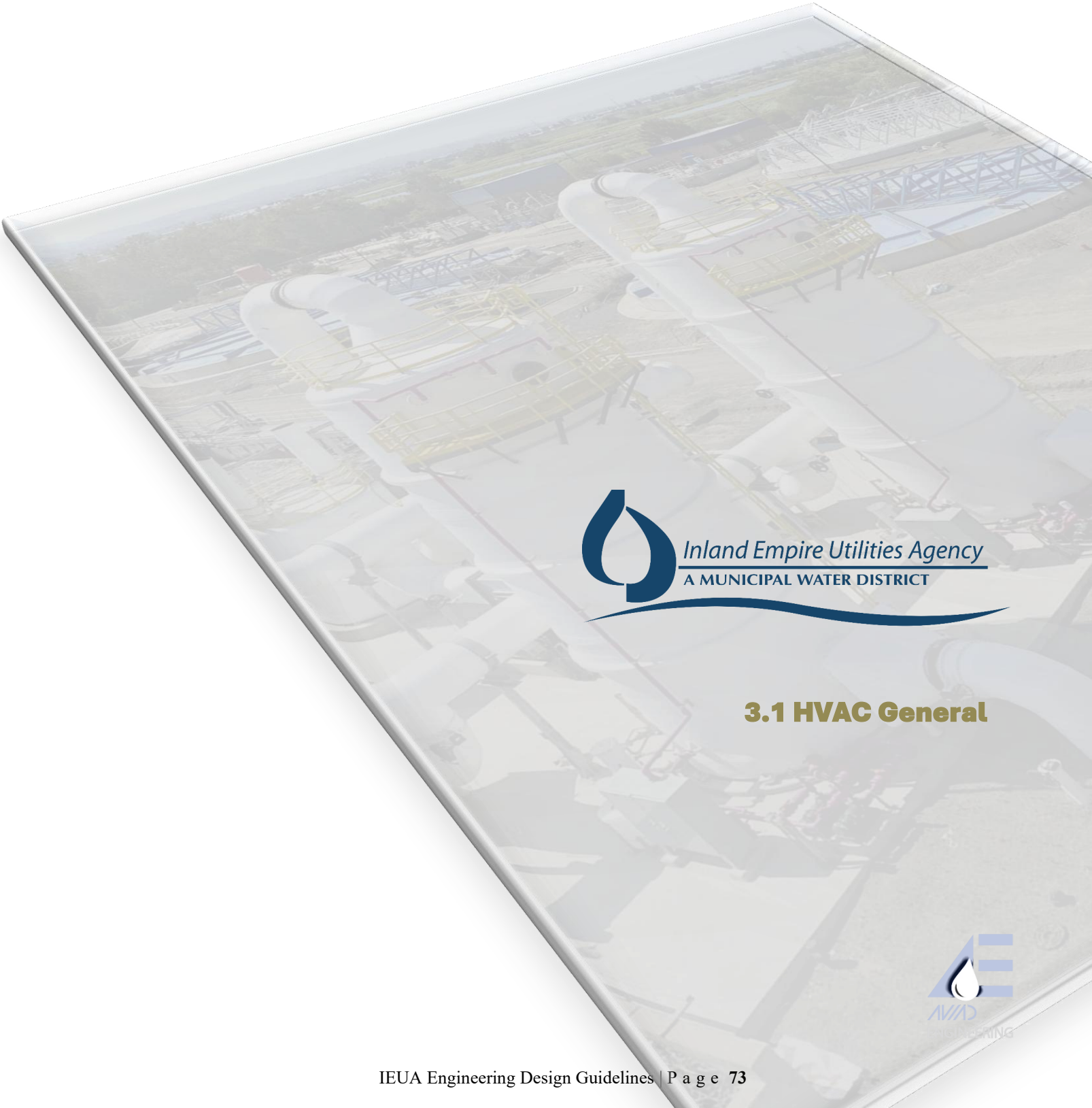

Inland Empire Utilities Agency
A MUNICIPAL WATER DISTRICT

3.1 HVAC General

3.1 HVAC General

		LAST UPDATED	May 1, 2024
Item	**Parameter**	**Criteria**	**Notes**
0	Scope	This document applies to all heating, ventilation, and air conditioning equipment and design.	
1	System Configuration Options	-Unitary equipment -Centralized heating and cooling system -Composite (combined) system	
		AC systems shall be consolidated where possible.	
		Redundancy is required in electrical rooms, server rooms, control rooms, and in other critical locations.	
2	Unitary Equipment Application	Use for small and remote buildings or system that require stand-alone or redundant cooling equipment.	
		Do not use where maintenance is difficult or access is limited.	
		Outdoor equipment, such as air-cooled condenser coils, corrode quickly if exposed to vapor/condensate of a sewage treatment process.	
		Not suitable for 100% outside air systems.	
3	Central System Application	Use for localized heating and cooling of groups of buildings.	
		Use hot water heating boilers and steam boilers.	
4	Composite System Application	Use if a central system can handle a group of buildings, but unitary system(s) are needed for remote or distant buildings.	
5	Weather Conditions	Summer conditions: select 0.5% design dry-bulb and coincident wet-bulb temperatures.	
		Winter conditions: select 0.6% design temperatures.	
		Use latest ASHRAE climatic data for the region.	

LAST UPDATED May 1, 2024			
Item	**Parameter**	**Criteria**	**Notes**
6	Equipment Access	Minimum 30-inches around all equipment.	
		When located on roof, proper accessibility and maintenance clearances are required. This includes stairs/ladders, platform, catwalk, handrails, etc.	
7	Equipment Location	Where possible, minimize long duct runs.	
		Unless necessary, do not mount equipment on roofs (adds expense of access ladders/catwalks and cranes are required to install/remove equipment).	
8	Intake/Exhaust Locations	Locate intakes considering prevailing wind direction and potential sources of odorous, toxic, or corrosive gases, and environmental conditions.	
		Do not route exhausts where they can feed air intakes.	
		Do not route exhausts toward the entry points of confined spaces.	
9	Ventilation	Ventilation is required for all buildings, equipment rooms, galleries, and storage areas.	
10	Odorous, Hazardous, and Special Environments	FRP fans, housings, and assemblies are required in corrosive environments (i.e., hydrogen sulfide).	
		Minimize potential for fire and explosion.	
		Maintain concentrations of hazardous gases to levels below those considered dangerous to personnel.	
		Headworks: -Run ventilation system continuously. -Exhaust air directly to odor control facilities rather than recirculate. -Maintain negative pressure. -Provide alarms activated by gas detectors at all entrances.	

LAST UPDATED May 1, 2024			
Item	**Parameter**	**Criteria**	**Notes**
		Computer / Control Rooms: -Do not use more than 10% outside air for cooling.-Provide special equipment with dehumidification capabilities and three-stage air filtration system.-Maintain positive pressure.	
		Locate exhaust points as close as possible to potential sources of odors or hazardous gases.	
		In chemical gas areas, locate supply points near the ceiling and exhaust points near the floor.	
		Provide dust removal systems for areas that produce dust (e.g., air filter, electrostatic precipitators).	
		Provide oxygen sensors where pure oxygen is used for aeration.	
11	Insulation	Insulate ductwork for mechanically cooled spaces to prevent condensation.	
		Use piping and equipment insulation where the following items are needed: -Heat loss/energy conservation. -Personnel protection. -Condensation control. -Jacketed insulation on exterior refrigerant lines.	
12	Vibration / Noise Control	Provide vibration control on all floor-mounted or large ceiling-hung air moving equipment.	
		Incorporate seismic bracing and restraints into large HVAC vibration isolation equipment and all suspended equipment.	
		Use duct silencers in conjunction with exhaust fans at areas containing equipment which generates substantial noise.	
		Control noise to meet local codes and regulations.	

		LAST UPDATED	May 1, 2024
Item	**Parameter**	**Criteria**	**Notes**
		In administration areas, insulate the interior of fans, air-handling units, and critical ducts.	
13	Fans and Air Handling Units	Use centrifugal, wall-mounted fans to exhaust the air.	
		The unit housing and coils shall be constructed on non-corrosive materials.	
14	Materials	Components: -non-ferrous. -bronze anodized aluminum. -FRP. -stainless steel. -Galvanized steel (only in locations not exposed to water, ground water, or sewer gas).	
		FRP shall have a flame spread of < 25 and smoke propagation < 400.	
		Consider fire-resistant FFRP ductwork in all hazardous and highly corrosive areas.	
15	Energy Efficiency	Design on steady-state heat transfer conditions with buildings and processes us use 24 hours per day.	
		Do not count thermal storage in the building mass to reduce the design loads.	
		Base calculation on ASHRAE Fundamentals.	
16	Boilers	Types: hot water heating and steam.	
		Fuels: natural gas, sludge digester gas, or both.	
		Do not use electric heating coils, unless at remote site without gas supply or small heating demands.	
		Follow applicable codes and SCAQMD regulations.	
		Include provisions for thermal expansion.	

LAST UPDATED May 1, 2024			
Item	**Parameter**	**Criteria**	**Notes**
		Provide heat for these central systems by natural gas fired high efficiency low temperature hot water boilers operating at over 90 percent low heating value (LHV) fuel to hot water efficiency.	
		Provide modulating control on 100 percent outside air systems.	
17	Ductwork	<u>Insulation:</u> -Double wall for outside. -Single wall for inside.	
		<u>Material:</u> -Typical: Galvanized steel. -Buried: HDPE. -Aeration areas: 316 SS. -Foul air: FRP.	
18	Refrigerant	Shall not be on EPA Phase-out List 2 years after announcement.	
19	Coils	Type: Copper Tubing with Aluminum Fins.	
		Coating: Use coated coil, unless otherwise noted.	
		Cleaning: Provide utility water tap with quick disconnect and hose.	
20	Manufacturers	See Section 3.2 (AC Units)	
21	Dampers	Use dampers on every header.	
		Use motorized dampers for 1+1 unit arrangement.	
		Use backdraft dampers if two units are feeding into same line	
22	Condensate Line Material	Copper.	
23	Alarms/Controls	Provide SCADA alarms for critical HVAC items. Provide room temperature monitoring at SCADA for critical areas.	
24	Slope and Drain	Provide slope with drain capture. 1% slope with flow and 2 % slope against flow.	
25	Floor Drain for Equipment	Use Josam E2 Series or equal for significant drain flows.	

		LAST UPDATED	May 1, 2024
Item	**Parameter**	**Criteria**	**Notes**
27	EMS Controls	JCI, Carrier IVU or Tridium.	
28	Minimum SEER	2 more than California minimum.	
29	Thermostat	Debonair if available.	
30	Access to AC Control Panel	Use hinged door rather than screws.	
31	Controls	Critical HVAC systems (e.g., in electrical rooms, SCADA rooms, server rooms, etc.) require remote monitoring and/or alarming	

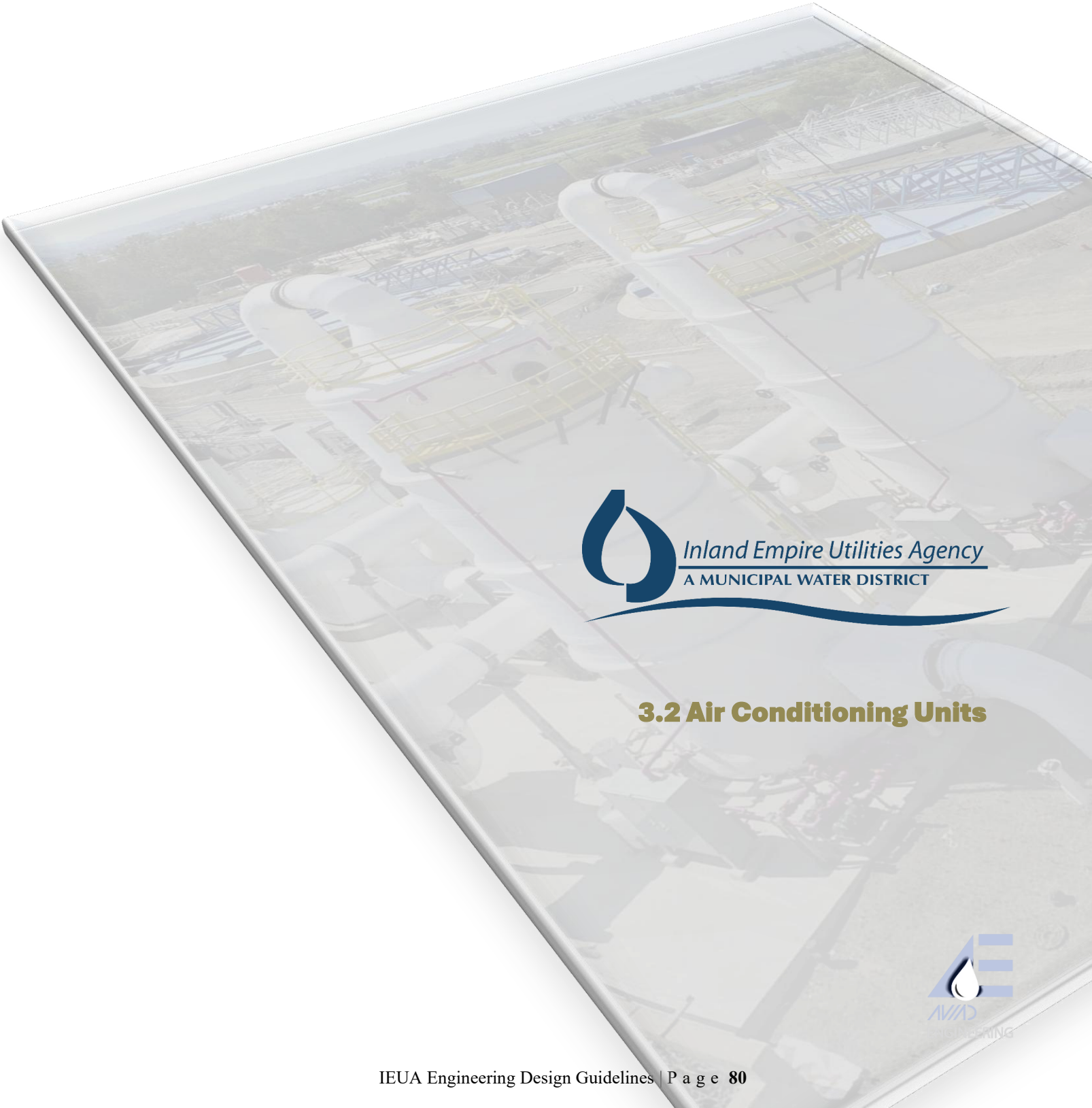

Inland Empire Utilities Agency
A MUNICIPAL WATER DISTRICT

3.2 Air Conditioning Units

3.2 Air Conditioning Units

		Last Updated	May 1, 2024
Item	**Parameter**	**Criteria**	**Notes**
0	Scope	This document applies to air conditioning units.	
1	Warranty	All AC Units require 1-year manufacturer's warranty.	
2	Acceptable Manufacturers	-Carrier. -Trane. -Liebert. -Mitsubishi (split systems)	
3	Cabinet and Frame	Materials: -Base frame: phosphatized, zinc coated 18 gage steel. -Doors and Access panels: 18 gage steel. -Cabinet Insulation: Fireproof material or foil faced glass fiber. -Exterior finish: Textured vinyl enamel to match computer equipment. -Roof mounted: 12 gage zinc coated steel with weatherproof seal.	
		Thermally and acoustically line cabinet interior equal to one inch thick of 1.5 lb./cf. density duct liner material, meeting requirements of NFPA 90A.	
		Panels shall be gasketed, with quick release hinged with latches and handles.	
4	Condensate Pan	Provide an insulated condensate pan under the evaporator coil. Provide copper condensate drain pipe complete with union, trap and open tee at discharge of trap, connect drain to condensate sump pump as specified hereinafter.	
5	Compressors	Type: -Hermetic. -Semi-hermetic.	
		Provide crankcase heaters, discharge muffler, and related components for proper operation.	

Last Updated			May 1, 2024
Item	**Parameter**	**Criteria**	**Notes**
		Use dual compressors for units larger than 5 tons.	Check availability.
		Compressor shall be serviceable without dismantling other components.	
6	Condensers	Provide air cooled units with matched air cooled condenser consisting of corrosion resistant cabinet, incorporating copper tube aluminum fin condenser coils arranged for minimum of two circuits and multiple direct drive condenser fans with inherently protected motors. Operating controls shall permit fan cycling for head pressure control.	
7	Filters	Provide removable, disposable pleated cartridge type filters with efficiency of 60 percent by NBS atmospheric dust spot method. Mount filters in top of cabinet in a track or holding device designed to preclude air bypass.	
8	Evaporator Coils	Type: Horizontally split face coils.	
		Material: Seamless copper tubes expanded into aluminum fins.	
9	Evaporator Fans and Motors	Fans shall be arranged to draw air through the cooling coils.	
		Type: multi-blade up flow propeller.	
		Fans shall be provided with vibration isolation from the unit casing.	
		Each fan shall be independently driven by heavy duty drip proof permanently or grease lubricated ball bearing motor with built-in current and overload protection.	
		Motors shall be installed on an adjustable base.	
10	Controls	All temperature sensors shall be mounted within the unit in the return air stream.	
		Temperature control shall be set to maintain 75 degrees F DB.	

Last Updated			May 1, 2024
Item	**Parameter**	**Criteria**	**Notes**
		High pressure fan control or economizer to be installed for low ambient temperature conditions.	
		The control and readout panel shall indicate the following: cooling operating stages, loss of air flow, dirty filters, high and low.	
11	Condenser and Evaporator Coils	3/8 inch OD seamless copper tube mechanically bonded to aluminum fins.	
12	Air Filters	Indoor: Continuous filament, pleated, 2-inch thick, viscosine coated removable media with filter cell.	
		Outside: Camfil Farr, with rainguard and PVC coated bird screen.	
		Flow rate: 200 cubic feet per minute with less than 0.25 water column drop.	
		Locate in dry areas.	
13	MCC Rooms	AC Package unit pad mounted with supply and return ductwork.	Is IEUA ok with high efficiency package wall mounted AC units?
14	Cabinet AC	Ice Qube or Mclean stainless steel for outdoor use.	

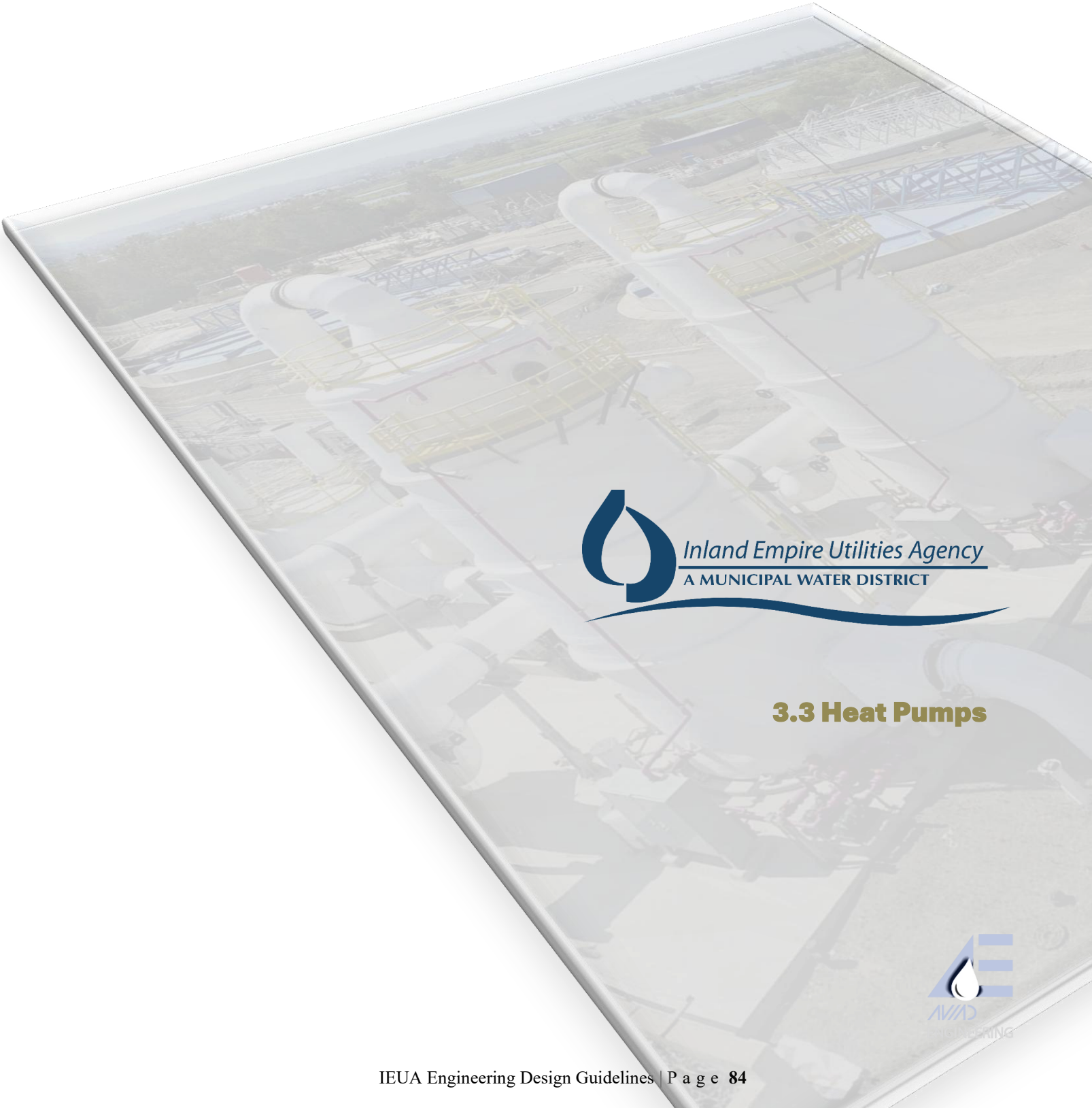

Inland Empire Utilities Agency
A MUNICIPAL WATER DISTRICT

3.3 Heat Pumps

3.3 Heat Pumps

		LAST UPDATED	May 1, 2024
Item	**Parameter**	**Criteria**	**Notes**
0	Scope	This document applies to heat pump units.	
1	Approved Manufacturers	Carrier.	
2	Ambient Conditions	Capable of operating at rated capacities at 120 degrees F.	
3	Materials	-Casing: 18 gage zinc coated steel. -Exterior surface: phosphatized, painted with epoxy primer, and finished with baked enamel. -Motor / Fan mounts: heavy zinc coating. -Coil frame: Minimum 12 gage zone coated steel.	
4	Condenser Fan and Drive	Type: axial flow propeller fan.	
		Material: Zinc plated or aluminum.	
5	Refrigerant Compressor	Type: hermetic reciprocating or scroll compressor.	
6	Condensing Coil	Seamless copper tubing and heavy-duty aluminum fins.	
7	Application	Office Space only.	

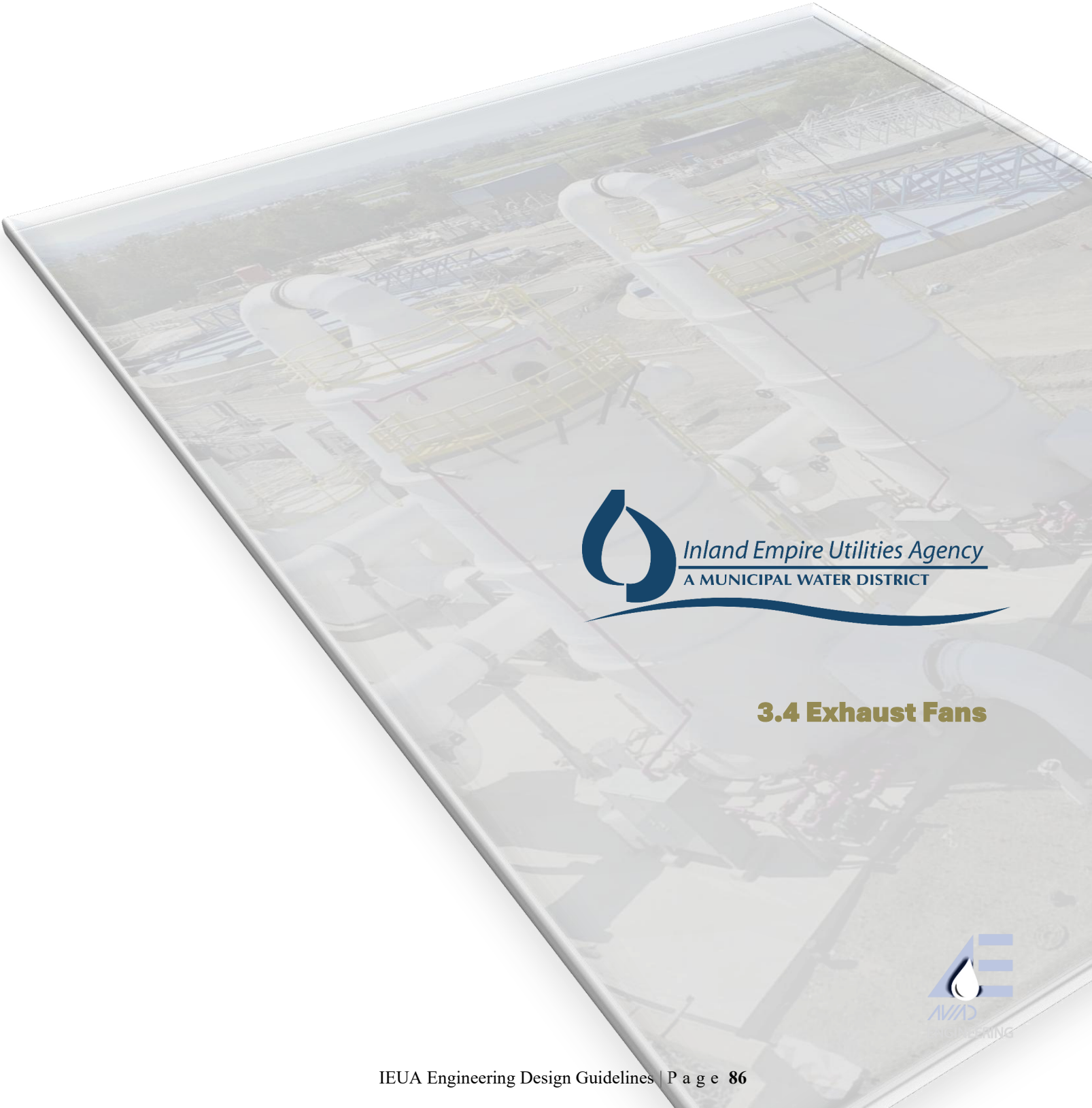

Inland Empire Utilities Agency
A MUNICIPAL WATER DISTRICT

3.4 Exhaust Fans

3.4 Exhaust Fans

LAST UPDATED			May 1, 2024
Item	**Parameter**	**Criteria**	**Notes**
0	Scope	This document applies to exhaust fans.	
1	Materials	-Fans: Fiberglass reinforced plastic, fire retardant. -Housing: Fiberglass reinforced vinyl-ester. -Metal components: coated with corrosion proof UV inhibited gel. -Fan shaft seal: Teflon seal between shaft and housing.	
2	Manufacturers	-Hartzell Fan, Inc. -Swarthout, Inc. -Greenheck.	
3	Type	Extruded flanged mounted louver with an integral draft damper.	
4	Housing	Provide corrosion resistant solid fiberglass reinforced plastic design with construction classification suitable for pressure range.	
5	Shaft bearings	Heavy-duty, grease lubricated, sealed, self-aligning, frictionless ball bearings, L-10 minimum life ratings of 50,000 hours.	
6	Hood and Bird Screen	FRP hood complete with guard securely anchored to hood inlets.	

Inland Empire Utilities Agency
A MUNICIPAL WATER DISTRICT

3.5 Ductwork and Accessories

3.5 Ductwork and Accessories

LAST UPDATED			May 1, 2024
Item	**Parameter**	**Criteria**	**Notes**
0	Scope	This document applies to HVAC ductwork and accessories.	
1	Materials	Select corrosive resistant material compatible with environment.	
2	Hanging Ductwork	Do not use straps for hanging ductwork, instead use angled rods constructed from the same material as the duct.	
		Hanger rods: Duct half perimeter up to 72 inch: 3/8 inch at 8 feet spacing. Duct half perimeter greater than 72 inch: 1/2 inch at 6 feet spacing.	
3	Sleeves	20 gage galvanized steel sleeve, caulked airtight with fire resistant sealant required when duct passes through masonry wall, partitions, or floors.	
4	Weatherproof Duct	16 gage galvanized steel.	
5	Air Volume Extractors	Manufacturers: -Hart and Cooley. -Titus.	
		Material: Aluminum.	
		Blades: Gang-operated curved adjustable blades controlled through a manual adjusting lever.	
6	Splitter Dampers	Manufacturers: -Hart and Cooley. -Titus.	
		Material: Aluminum.	
		Adjustment: Manual adjusting lever with locking device.	
7	Volume Dampers	Manufacturers: -Honeywell. -Arrow United Industries, Inc.	
		Material: Match Duct.	
		Blades: opposed blades, key operated with vinyl edge seals.	

LAST UPDATED May 1, 2024			
Item	**Parameter**	**Criteria**	**Notes**
		Provide outside handle, quadrant, approved position indicator, locking device and linkage for manual operation or motorized operation.	
		Performance:-Damper Leakage: Not more than 16 cfm per square foot at 4-inch W.G.-Certification: Manufacturer shall provide certified test data.	
8	Belt Guards	Expanded hinged steel or hinged sheet steel for weather protection where required.	
		Fabricate guards to receive 2-inch larger pulleys without alteration to the guard.	
9	Flexible Connections: (For air handling units)	Material: -3/16-inch thick, 6-inch wide fabric reinforced neoprene. -0.080 gauge, 3-inch wide aluminum strip.	
10	Turning Vanes	Same material as ducts. Vanes shall be 2-inch blades for ducts up to 18 inches in either dimension and shall be 4-1/2 inch blades for larger ducts.	
		Vanes: Double thickness for supply and exhaust/return ductwork. Finished with an air dried phenolic corrosion resistant coating prior to installation.	
11	Screens	1/2 inch mesh, stainless steel metal screen with stainless steel frame.	
12	Registers, Grilles, and Diffusers	Manufacturers: -Carnes -Hart and Cooley -Titus	
13	Supply Registers	Type: Individually adjustable	
		Frame and Blades: Aluminum in aluminum and galvanized steel ducts. SS in SS or FRP ducts.	
14	Smoke Dampers	Comply with fire and mechanical Codes.	

LAST UPDATED			May 1, 2024
Item	**Parameter**	**Criteria**	**Notes**
15	Supply Diffusers	Type: Square, step-down outlet with round neck.	
		Frame and Core: Aluminum in aluminum and galvanized steel ducts.	
		Provide combination volume control and equalizing deflector construction of same material as frame above.	

Inland Empire Utilities Agency
A MUNICIPAL WATER DISTRICT

3.6 Ventilation Schedule

3.6 Ventilation Schedule

LAST UPDATED May 1, 2024			
Area	**Ventilation Requirements**	**Room Condition Heat-Cool, °F**	**Duct Materials**
Administration/ Operation Building			
-Offices	15 to 20 cfm/person (4)	70/78	Aluminum, G.S.
-Meeting & Conference Rooms	15 to 20 cfm/person (4)	70/78	Aluminum, G.S.
-Toilet/Locker Rooms	100% exhaust	70/78	Aluminum
-Control/Computer Rooms	10% Outside air	72/72	Aluminum, G.S.
-Stairwells (enclosed)	100% Outside air (5)	50/85	Aluminum, G.S.
-Laboratories	100% exhaust (5)	70/75	FRP/SS
Maintenance Building			
-General		40/90	Aluminum, G.S.
-Shops and Offices		68/75	G.S.
Control Rooms/Centers			
-Attended	6 Air changes/hr.	68/75	Aluminum, G.S.
	10% Outside air.		
-Unattended or combined-with MCC	6 Air changes/hr.	55/85 (max.)	Aluminum, G.S.
	10% Outside air.		
Motor Control Center Rooms/ Buildings	6 Air changes/hr.	55/90	Aluminum, G.S.
	10% Outside air.		
HVAC Equipment Rooms	6 Air changes/hr.	No requirement	G.S.
Storage Rooms		No requirement	G.S.
Thickening Control Building	12 continuous air changes/ hour 100% outside air.	55/85	FRP
Digester Area			
-Gas Compressor Room (explosive, toxic)	12 continuous air changes/ hour 100% outside air, 30 changes/hour intermittent (1)	55/85	Anodized Aluminum, Type 316 SS, or RFP
Dewatering Building	12 continuous air changes/ hour 100% outside air	55/90	FRP

LAST UPDATED May 1, 2024			
Area	**Ventilation Requirements**	**Room Condition Heat-Cool, °F**	**Duct Materials**
Dewatered Biosolids Storage Building	12 continuous air changes/ hour 100% outside air	No requirement	Anodized Aluminum, Type 316 SS, or FRP
Chemical Areas			
-Chlorine (toxic, corrosive)	10-20 air changes/hour 100% outside air (3) (1)	60/90	FRP(3)
-Chemical Storage Rooms	10-20 air changes/hour 100% outside air (1)	60/90	
Peroxide Storage & Handling Areas	10-20 air changes/hour 100% outside air (1)	60/90	FRP
Chemical Handling	6 air changes/ hour 100% outside air (1)	55/85	FRP
Tunnels/Underground Gallery	Table 8.3, see NAPA 820	No requirement	G.S.
-w/o gas piping	6 air changes/ hour 100% outside air (1)		Aluminum, G.S., FRP
-w/gas piping (potentially explosive)	12 continuous air changes/ hour 100% outside air		Aluminum, G.S., FRP
Stairwells to Tunnels or Basement/Underground Structures			
Preliminary Treatment/ Headwork's Building	20-30 air changes/hour 100% outside air. Chemical scrubber	40-90	Aluminum, G.S., FRP
-Wet wells (explosive, toxic, corrosive, high humidity)	30 continuous ventilation air changes/hour 100% outside air	No requirement	Aluminum, G.S., FRP
-Screening (explosive, toxic, corrosive, high humidity)	20(8)-30(1) continuous ventilation air changes/hour 100% outside air	50/90	Aluminum, G.S., FRP
-Grit removal (high humidity, corrosive) room (above tank covers)	20(8)-30(1) continuous ventilation air changes/hour 100% outside air	50/90	Type 316 SS, or FRP

LAST UPDATED May 1, 2024			
Area	**Ventilation Requirements**	**Room Condition Heat-Cool, °F**	**Duct Materials**
Process Equipment Rooms	6[8]-12[1] Ventilation air changes/hour 100% outside air	50/85	FRP
Cogeneration Building	12 continuous air changes/ hour 100% outside air	40/90	Aluminum, G.S.
-General (explosive)	Ventilation air changes 100% outside air	50/95	FRP for process areas
-Offices (physically separated)	15 to 20 cfm/person [4]	70/78	Aluminum, G.S.
Oxygen Plant	Contract operation		Physically separate system from process ducts
-General (explosive and flammable) (20-foot minimum envelope around equipment)	12 continuous air changes/ hour 100% outside air	N/A	FRP for process areas
Process Area Offices	15 to 20 cfm/person [4]	70/78	Aluminum, G.S.

Table Footnotes:

[1] Higher ventilation rate when people are present

[2] Review NFPA 820 for specific process.

[3] Special ventilation requirements for chemical spills (refer to applicable NFPA standards).

[4] Review Title 24 and ASHRAE Standard 62-1989 for requirements

[5] Follow Title 24, BOCA, ASHRAE, and local codes for requirements.

[6] Refer to Title 24 for ventilation rate if refrigeration machines are housed indoors

[7] More restrictive than WEF MOP No. 8, Table 7-6

[8] Intermittent when people are not present

Inland Empire Utilities Agency
A MUNICIPAL WATER DISTRICT

Engineering Design Guidelines

Section 4- Electrical and Instrumentation & Control

Section 4- Electrical and Instrumentation & Control

Inland Empire Utilities Agency
A MUNICIPAL WATER DISTRICT

4.1 Electrical and I&C, General

4.1 Electrical and I&C, General

		LAST UPDATED	Sep 1, 2025
Item	**Parameter**	**Criteria**	**Notes**
0	Scope	This document provides guidelines for general electrical requirements which shall be applicable to electrical and instrumentation installations.	Consultant must include these requirements in Project Technical Specifications.
1	Configuration of Field Equipment	Field test results and field settings shall be recorded and submitted to the Owner for their records.	
	Prior to Factory Acceptance Testing	When a control, network, or IO panel is involved, we would expect the following before FAT occurs: • Approved panel drawings, loop drawings, network drawings • Approved IO list • P&IDs • Approved Process Control Narrative • Approved Factory Acceptance Testing (FAT) Plan • Conditionally approved programming submittals, HMI, PLC, Reports, Historian, config files, programming and data documentation, etc. • Signed contractor's bench test	
	Prior to startup/commissioning	Prior to startup, we would expect the following: • Approved panel drawings, loop drawings, network drawings • Approved IO List • P&IDs • Approved Process control Narrative • Factory Acceptance Testing completed successfully, and signed forms submitted • Approved start-up procedure, step by step plan, SDTI forms, and checklists	

		LAST UPDATED	Sep 1, 2025
Item	**Parameter**	**Criteria**	**Notes**
		• Training for IEUA Operational Technology and Operations staff has been completed. • Approved programming submittals, HMI, PLC, Reports, Historian, config files, programming and data documentation, etc.	
2	Factory Acceptance Testing	Factory Testing (prior to shipping): - Verify operation. - Simulate inputs and outputs as required. - Required on Control Panels and Equipment with motor controls - May be required on Generators and other equipment. - Where not specifically required Contractor shall provide factory test results, and advise with a 10 working day notice of intent to carry out tests so that IEUA can provide a representative to witness if they desire. • Third party electrical testing shall be performed by NETA-certified independent entity; NICET certification is accepted. • Electrical testing firm can not provide manufacturer certification or repairs.	

		LAST UPDATED	Sep 1, 2025
Item	**Parameter**	**Criteria**	**Notes**
		• Include testing for all redundancies, as applicable, including but not limited to: HMI server, alarm server, Direct Attached Storage (DAS) server, FactoryTalk® Live Data (FTLD) interfaces, Historian collective, power supplies, PLCs, UPSs, PRP/DLR. • All aspects of the control narrative are to be tested. • All failure modes are to be tested.	
3	Installation and Start-Up	Startup and Commissioning Plan: No startup or cutover activities shall be performed until the plan has been successfully approved by the Owner and Engineer in writing. The plan shall be specific to the project.	
		Retest: Engineer reserves the right to retest functions as needed to demonstrate that system performs as intended.	
		Final Acceptance: Engineer and Owner's decision shall be final regarding completeness of testing and final acceptance.	
		Contractor to provide Procedures, Forms, and Checklists: • Conduct all testing in accordance with, and documented on, Engineer accepted procedures, forms, and checklists. • Describe each test item to be performed. • Have space after each test item description for sign off by appropriate party after satisfactory completion.	

		LAST UPDATED	Sep 1, 2025
Item	**Parameter**	**Criteria**	**Notes**
4	Electrical Tests	Insulation Test:a. Test Bolted connections with low-resistance ohmmeter.b. Measure insulation resistance of each control circuit-to-ground.c. Insulation resistance test at 1,000 VDC on control wiring. For units with solid-state components, follow manufacturer recommendations. Minimum 2 Mohms test resistance.	
		Point-to-point Test: each hardwired point prior to calibration of devices.	
		Operational Test: a. Operation of control interlocks, indicating lights, relays, timers, push buttons. b. Thermal overload heater elements installed in each motor starter and properly sized. c. Demonstrate function of each system.	
		Performance Test: a. Prerequisites: Plan submitted and approved, other electrical tests completed. b. Verify sequence of operation. c. Acceptance requires successful functional performance test as witnessed by Engineer and/or Owner.	

		LAST UPDATED	Sep 1, 2025
Item	**Parameter**	**Criteria**	**Notes**
5	Demonstration and Training	Four (4) hours of instruction for each unique control panel, to be conducted at project site with Operators, Maintenance and Operational Technology (OT) staff. - Demonstrate control panel operation and system function. - Identify control panel devices and their function. - Identify special features and interface points. - Review standard maintenance practices.	Operator training shall demonstrate process control and operation through HMI/OIT (in a simulated environment if cannot be done on live system).
6	Preliminary Design	Report: - Identify where power is being sourced and confirm available capacity for the new system. - Submit calculations and electrical load summary.Describe controller being used, controller capacity, CPU usage, memory usage, software and hardware compatibilities and how the project will communicate with the IEUA SCADA system. - Describe scope of electrical work. - Emergency backup power. - Any local noise/air quality/other regulations that may impact on design of electrical equipment. - Any outstanding items that need to be addressed during detailed design. - Heat Mitigation requirements	

		LAST UPDATED	Sep 1, 2025
Item	**Parameter**	**Criteria**	**Notes**
		Single Line Diagrams: - Shall demonstrate general capacity and sizing of incoming lines (voltage and size —capacity and rating). - Show source of power. - Show the number of circuits. - Specific equipment ratings may not be required however enough detail needs to be provided to generate an accurate picture of the overall size and scope of the project.	
		Electrical Layout: - Lighting, Fire, Security, Communications, Building Services concept. Details of specific equipment is not required at this stage. - Cable Routing (conduit, tray, ladder, pull boxes, vaults, etc.) for main cables only. Details of small above ground cable routing for building services equipment is not necessary at this stage. - Approximate Instrumentation and Electrical Equipment locations. - Present on a single layout.	
		P&IDs-General Process flow with instruments identified.- For larger projects it may be useful to develop this further similar to the detail in Final Design Drawings however this should be determined based on the particular project.	

		LAST UPDATED	Sep 1, 2025
Item	**Parameter**	**Criteria**	**Notes**
7	Final Design Drawings	Control / Network / SCADA Block Diagram: - Show details of the communications interface with the plant or wide area network. - Panel Drawings and wiring diagrams should including details of panel location, panel size, heat load calculation A/C requirement, sunshade requirement, UPS power feed. For any existing panel(s) that will be modified, include panel drawings and wiring diagram to show modification needed.	IEUA to check design submittal for each Project.

		LAST UPDATED	Sep 1, 2025
Item	**Parameter**	**Criteria**	**Notes**
		P&IDs: - Show instrument symbols based on International Society of Automation (ISA) Standard S5.1. - Primary process flow shown left to right. - Primary process flow shown in heavier line type than secondary and utility lines. - Include the following: •Instruments significant to the process . •Mechanical equipment, valves, pumps, piping (sizes/materials), fittings, reducers and increasers, swages, etc. •Direction of flow. •Seismic category. •Quality level. •Interconnection references. •Annunciation inputs and outputs (across the top of the page). •Plant controller inputs and outputs (across the top of the page). •Vendor and contractor interfaces. •Identification of components and subsystems by others. •Reference to a vendor drawing for details not shown. •Instrument, pipeline, tank, valve ID or tag designations and names.	Information such as Seismic category and quality level can be placed in a note box.
		PLC IO Wiring Diagrams:- Showing all analog loops and digital IO wiring.- Show all IO (even un-used) to be wired to terminals.- Terminal strip to allow inputs to be wetted from field or panel (i.e. hot terminal or volt-free terminal for each input).	Provide IO List and Network Device List in Excel as part of the design.

		LAST UPDATED	Sep 1, 2025
Item	**Parameter**	**Criteria**	**Notes**
7	Final Design Drawings cont.	Single Line Diagrams: - Incoming lines (voltage and size, capacity and rating). - Incoming main fuses, potheads, cut-outs, switches and main and tie breakers. - Power transformers (rating, winding connection and grounding means). - Feeder breakers and fused switches . - Relays (function, use and type). - Current/potential transformers (size, type and ratio). - Control transformers. - All main cable and wire runs with their associated isolating switches and potheads (size and length of run). - All substations, including integral relays and main panels and the exact nature of the load in each feeder and on each substation. - Critical equipment voltage and size (UPS, battery, generator, power distribution, transfer switch, computer room air conditioning).	
		Electrical Layout: - Grounding & Bonding Connections. - Lighting, Fire, Security, Communications, Building Services. - Cable Routing (conduit, tray, ladder, pull boxes, vaults, etc.). Specify sizes and materials of all equipment. Provide means for determining the route taken by each cable. - Instrumentation and Electrical Equipment locations including ID or tag numbers. - Consider presenting each of these as separate layouts for larger projects.	

		LAST UPDATED	Sep 1, 2025
Item	**Parameter**	**Criteria**	**Notes**
		Cable Schedule:- Cable Number, To, From, Type, Size, Number of Conductors, Length (leave blank for contractor to complete), Notes, Conduit Route.- Numbering shall be as per IEUA requirements.	
7	Final Design Drawings cont.	Motor Elementaries, ATS control circuits, other control interfaces with MCC/Switchboard:- Per control requirements and typical.	
		Installation Details: - For all details not communicated in other drawings.	
		- Final Design Electrical Drawings should be developed in AutoCAD that shows cross references for all components within the drawings.	
8	Closeout Submittals	As-built drawings: - All wiring diagrams, panel layouts and design drawings shall be signed by the manufacturer/installer/site contractor to indicate the drawings are as-built. - Final set of wiring diagrams, panel layouts and design drawings to be submitted in AutoCAD and pdf format.	
		Device Configuration: - Include all device configuration in a tabular Microsoft Excel spreadsheet, including hardware ID, default device settings and final device settings. - An electronic copy shall be provided for all SCADA or PLC programs provided and closeout PLC Programs shall be fully commented in their native format.	

		LAST UPDATED	Sep 1, 2025
Item	**Parameter**	**Criteria**	**Notes**
		O&M Manual: - Manufacturer's installation, lubrication, operation and maintenance manuals. - HMI screen printouts and description of controls - Instruction for adjustments, calibration, troubleshooting and preventative maintenance. - Description of emergency power, interlocks, fire, security systems on larger sites. - Wiring diagrams for each control panel and motor control center. - As-built and record drawings. - Device Configuration. - One hardcopy bound set to be provided. - One electronic copy with copies of submitted documentation in Adobe Acrobat PDF format.	
9	Warranty	System Warranty: Minimum one (1) year beyond final acceptance on all hardware components, including parts and labor for any defects.	
		Third Party Warranties: Not accepted.	
10	Maintenance Materials Per Panel or Enclosure	Power Fuses: Provide three (3) spare fuses for each size.	
		Control Fuses: Provide six (6) spare fuses for each size.	
		Indicating Lamps: Provide two (2) spare Cluster LED-type for each color.	
		Keys: Provide three (3) spares for each unique enclosure lock.	
11	Coordination and Arc Flash Study	Evaluate if study is required by code. Coordination, Short Circuit, Arc	

		LAST UPDATED	Sep 1, 2025
Item	**Parameter**	**Criteria**	**Notes**
		Flash, and Harmonic Studies to be performed using ETAP Software.	
12	Tagging	Label equipment based on IEUA Tagging guidelines (see Appendices).	
13	Parallel Redundancy Protocol (PRP)	There should be a dedicated PRP IO network per controller (simplex or redundant controller).	
14	Network Switch Power Supplies	All network switches should have redundant power inputs and be fed from 2 independent power feeds (at least one UPS feed) 2nd power supply of Cisco switches is commonly missed in specs.	
15	Small Form-Factor Pluggable (SFP)	Specify rugged Cisco SFP Transceivers; e.g., Cisco GLC-SX-MM-RGD	
16	PLC Simulation requirements	PLC submittals should have simulation routine(s), as applicable, that allows factory testing to test all aspects of the process control narrative (PCN). Simulation would be disabled and removed upon startup.	
17	OT Inventory	• Inventory of PLC components, network components, should be tracked on Asset Management Upload Sheets. IEUA will provide PAC inventory stickers for Contractor to apply to components and record in Sheets. Inventory must be completed prior to factory acceptance testing. This will be checked at factory acceptance test and site acceptance test.	
18	PLC Programming Standards	• Array index limit checking should be done, to ensure proper	

		LAST UPDATED	Sep 1, 2025
Item	**Parameter**	**Criteria**	**Notes**
		program function and no possibility of minor fault. • Every program needs to have programmer's contact information - company name, programmer name, contact information. This can be located in controller properties description in the case where an entire program is provided. In the case where a portion of work is done within an existing controller, include this information as a rung comment on rung 0. • No oneshot logic where a bit turns on for only one scan, excluding initialization logic upon first scan • HMI commands should be a set value, where the PLC would reset the value upon receipt of the command. Do not use momentary buttons for commands to the PLC. • Do not use @ parameters in logic. All tags should be able to be cross-referenceable. • Do not use alarm bits for control in logic. • Logix Diagnostic Objects are to be included. These include but are not limited to: L_CPU, L_Redun, L_TaskMon, L_ModuleSts. Reference Rockwell publication PROCES-RM003E-EN-P. • Diagnostics for network status, PRP/DLR, stratix switches are to be included.	

		LAST UPDATED	Sep 1, 2025
Item	**Parameter**	**Criteria**	**Notes**
		• Power supply and UPS failure alarms should be configured and annunciated on HMI. • For controller to controller messaging, READ messages preferred. WRITE messages need to be justified and approved by IEUA. Registers read by another PLC should be clearly indicated.	
19	SCADA Workshop Material	SCADA workshop material needs to be submitted at least 2 weeks in advance for IEUA staff to review. Workshop content: Review the following with Operations and ISS staff: 1. Process Control Narrative review/update 2. HMI graphic displays and layouts, including HMI trends, faceplates etc. Demonstrations 3. Alarm & Events 4. Historization 5. Reports - PI Datalink, PI Vision, SSRS alarm reports and event history 6. PI Asset Framework 7. Review FAT/SAT test procedures Review the following with ISS staff: 1. Master I/O list, I/O and panel drawings, network architecture 2. HMI FT View Studio back end design and configuration 3. PLC programming, review CPU loading status, logical organizer, etc.	Consultant to verify that these requirements are aligned with the "Front End" for each Project. Refer to General Conditions, Section D, item 16.0 Construction Workshops.

		LAST UPDATED	Sep 1, 2025
Item	**Parameter**	**Criteria**	**Notes**
		4. Historian tags and tag configurations 5. Reports and PI Asset Framework back-end design and configuration 6. As-built IAB/PSE progress	
20	Ethernet Cables	• All wiring installations shall be tested to ensure conformity with Category 6A, TIA 568 or IEC 11801, or better. • Copper patch panels required for any ethernet cables entering or leaving a panel.	
21	Network Drawings	• Differentiation between single mode and multimode fiber should be made • Network drawings are to include termination drawings for network devices • See IEUA sample drawings	
22	Temporary Generators	• See Generators Section 4.14.	

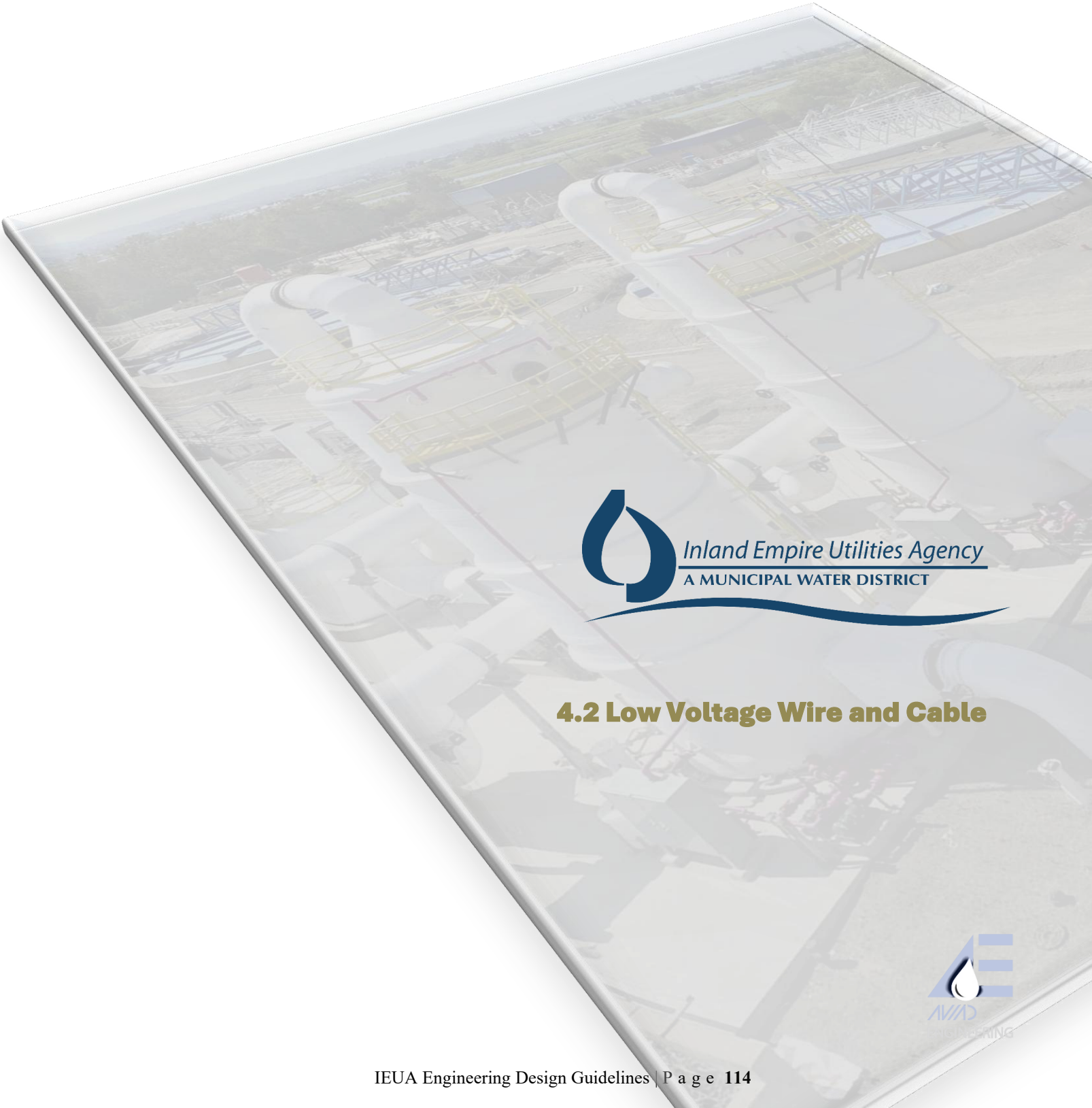

Inland Empire Utilities Agency
A MUNICIPAL WATER DISTRICT

4.2 Low Voltage Wire and Cable

4.2 Low Voltage Wire and Cable

LAST UPDATED June, 2024			
Item	**Parameter**	**Criteria**	**Notes**
0	Scope	This document outlines the requirements for all wire and cable rated up to 600 volt.	
1	Minimum Size	All wire and cables shall be minimum No. 12 AWG copper conductor unless otherwise shown on drawings.	
2	Conductor Material	Copper.	
3	Manufacturers	Domestic manufacturer regularly engaged in the manufacture of Building Wire and Cable products for at least five (5) years as follows: - American Wire and Cable. - Cerro Wire and Cable Co. - General Cable Corp. - Okonite Co. - Southwire. - Belden, - or equal.	
4	Power Cables - Building Wire and Cable	THW (UL-83), THHN/THWN (UL-83), or XHHW (UL-44), single conductor copper, per ANSI/NFPA 70.	THW-2, THHN/THWN-2 or XHHW-2 provide 90degC temperature rating in wet conditions and are also acceptable.
5	Power Cables - Interior Dry Location	THHN/THWN (UL-83) or XHHW (UL-44) insulation, in raceway.	THHN/THWN-2 and XHHW-2 provide 90degC temperature rating in wet conditions and are therefore also acceptable.
6	Power Cables - Exterior Wet Location	XHHW (UL-44) insulation, in raceway.	XHHW-2 provides 90degC temperature rating in wet condition and is therefore also acceptable.

LAST UPDATED June, 2024			
Item	**Parameter**	**Criteria**	**Notes**
7	Power Cables - Underground Dry or Wet Location	XHHW (UL-44) insulation, in raceway.	XHHW-2 provides 90degC temperature rating in wet condition and is therefore also acceptable.
8	Power Cables - Service Entrance Cables	U/G: Single conductor, copper, stranded, 600 VAC, XHHW (UL-44) insulation. O/H: Single conductor, copper, stranded, 600 VAC, SE (UL-854) insulation.	XHHW-2 provides 90degC temperature rating in wet condition and is therefore acceptable in lieu of XHHW.
9	Power Cables - Between VFD and Motor	XHHW or equivalent for cable runs less than 50 ft	
10	Instrument Cables - Field Mounted Equipment	2 conductor, tin-coated copper, stranded, shielded twisted pair, 600VAC, 16AWG minimum, 80 degC, PVC insulation, foil shield, O/A HD polyethylene jacketing.	Cable shield to be grounded at one end only (panel end). Shield shall not be grounded in classified area.
11	Instrumentation Cable - Field RTDs	Triad, tin-coated copper, stranded, shielded, 600VAC, 16AWG minimum, 90 degC, PVC insulation, foil shield, O/A HD polyethylene jacketing.	Run with control/instrumentation cables and not with power cables.
12	Control Cables - Field Mounted Equipment	Single conductor, copper, solid or stranded, 600VAC, 14 AWG minimum. THHN/THWN (UL-83) or XHHW (UL-44) insulation.	
13	Control Cables (multi-conductor) - Field Mounted Equipment	Copper, solid or stranded, 600 VAC, 14 AWG minimum, with an overall protective PVC jacket. THHN/THWN or XHHW insulation. Circuit identification shall consist of Method 1 - color coding in accordance with ICEA S-66-524, Appendix K Table K-2.	THHN/THWN-2 and XHHW-2 provide 90degC temperature rating in wet conditions and are therefore also acceptable.
14	I&C Cables - Within Control Panel	Per equipment manufacturer, minimum #16 AWG.	
15	Fiber Optic	Product Spec: In accordance with IEUA fiber optic cable specification. Size: Minimum 24 core.	

LAST UPDATED June, 2024			
Item	**Parameter**	**Criteria**	**Notes**
		Terminations: Terminate all cores at fiber optic breakout tray or patch panel. Provide patch leads to switch.	
16	Ethernet Cable	Type: Cat6 Ethernet Cable.	Rack-mounted switches: Provide a patch panel. Control Panels w/ industrial switches: Confirm patch-panel/RJ-45 coupler requirements.
		Shielded: Shielded Cat6 for all field cabling. Terminate with shielded connectors at receiving end (RTU, PLC, IS barrier, etc). Insulate shield at the field end unless otherwise required.	
		Terminations: Terminate all field cables at a patch panel or RJ45 coupler before continuing to equipment connection with jumper. All shielded Cat6 cabling shall be terminated at a patch panel. Provide CAT6 patch panel in each RIO cabinet so that field network cables are terminated on patch panel, not directly on switches.	
17	Wiring Connectors - Split Bolt	- FCI Burndy Corp. - Cooper Crouse Hinds. - O.Z./Gedney Co. - Thomas & Betts Co. - 3-M Co.	
18	Wiring Connectors - Solderless Pressure	- FCI Burndy Corp. - Ideal Industries Co. - Thomas & Betts Co. - 3-M Co.	
19	Wiring Connectors - Spring Wire	- Ideal Industries Co. - 3-M Co.	
20	Wiring Connectors - Compression	- FCI Burndy Corp. - Thomas & Betts Co. - 3-M Co.	
21	Conductor Color Code - General	Wire sizes ≤ #6 AWG: Integral color-coded insulation.	At all junction, splice, pull or termination points.
		Wire sizes ≥ #4 AWG: Black insulation & colored electrical tape accepted.	
		Color Tape Application: Apply to at least 3 inches of the conductor at ends.	

LAST UPDATED June, 2024			
Item	**Parameter**	**Criteria**	**Notes**
		Splice Points: Conductor colors shall not change color at splice points.	
		Neutral: Identify related circuit if two or more neutrals in one conduit.	
		Ground > #6 AWG: Green tape at both ends and all visible points.	
22	Conductor Color Code	120/240/208 V conductor:a. Phase A - Black.b. Phase B - Red.c. Phase C - Blue.c. Neutral - White.d. Ground - Green.	
		277/480V conductor: a. Phase A - Brown. b. Phase B - Orange. c. Phase C - Yellow. d. Neutral - White or Natural Gray. e. Ground - Green.	
23	Specification	Specification shall include requirements for proper installation including: - Ensuring conduits are free from particles of earth, sand and gravel. - Ensuring cables are not damaged during installation. - Ensuring terminations are done correctly.	
24	Cable Identification	Product Description: Permanent, pre-printed, waterproof labels, firmly attached to the cable at each termination or splice point.	Numbering scheme to be confirmed with IEUA. Minimum font size of Arial 8.5pt.
		Manufacturers (heat-shrink sleeve type): W.H. Brady Co.; Thomas & Betts Co.; 3M Co. or approved equal.	
		Manufacturers (self-adhesive vinyl tapes): W.H. Brady Co.; Panduit Corp. or approved equal. Only use for diameters exceeding the capacity of heat-shrink sleeve type.	
25	Splicing	Instrumentation & Control cable splices: Not accepted.	

LAST UPDATED June, 2024			
Item	**Parameter**	**Criteria**	**Notes**
		Power cable splices: Not accepted on new installations. Requires approval by IEUA during design.	
		For control panel items with built-in pig tails (such as fans), use Wago 221-413 Lever-Nuts 3 Conductor Compact Connectors, 12-24 AWG	

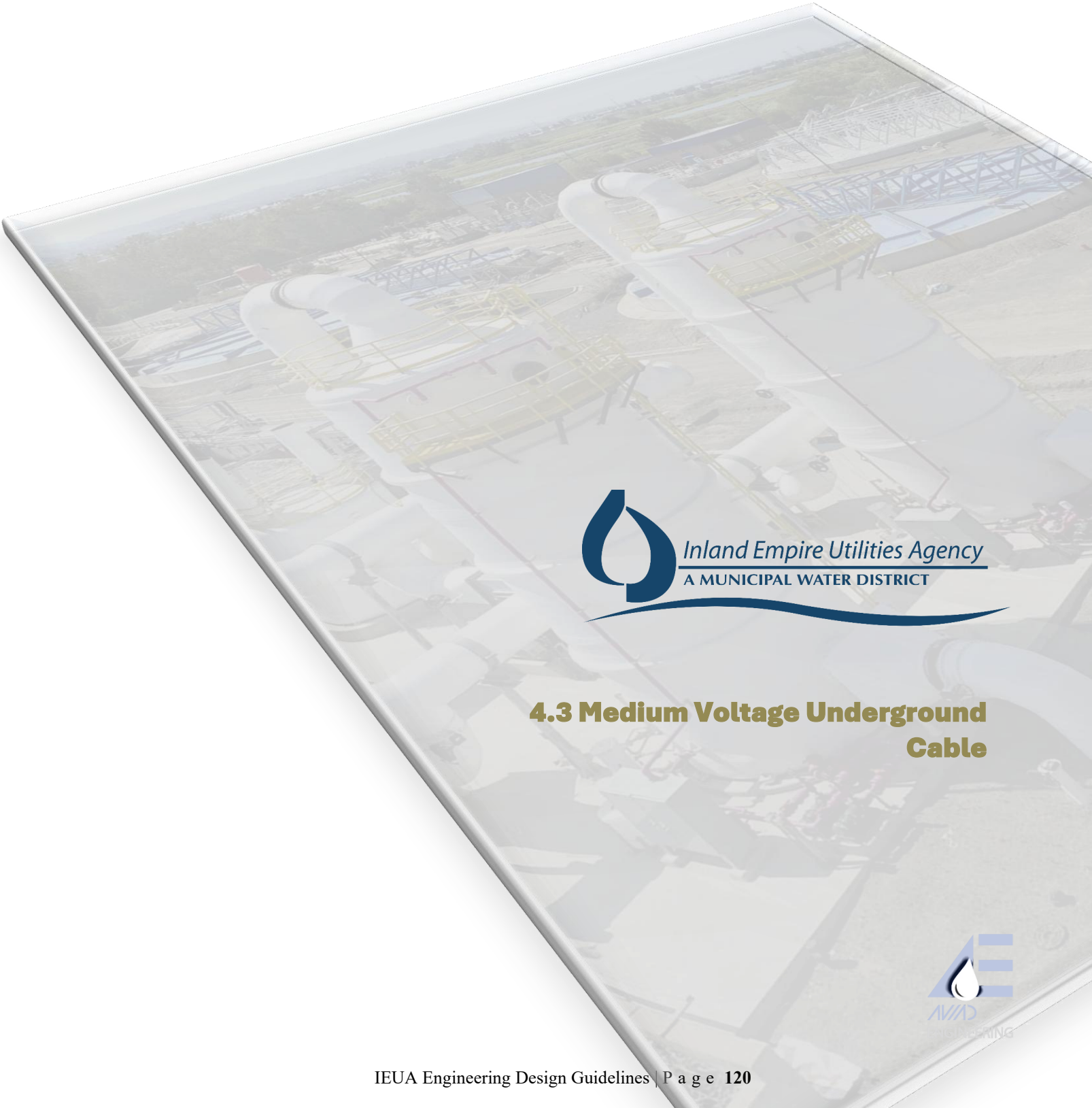

Inland Empire Utilities Agency
A MUNICIPAL WATER DISTRICT

4.3 Medium Voltage Underground Cable

4.3 Medium Voltage Underground Cable

LAST UPDATED			June, 2024
Item	**Parameter**	**Criteria**	**Notes**
0	Scope	This document outlines the requirements for all underground cable rated above 600 volt. Overhead cable is not covered in this document.	
1	Type	MV-105.	
2	Manufacturers	BICC Cables, Okonite, Southwire, Houston Wire & Cable, or equal.	
3	Conductors	Single Copper Conductor per cable. Annealed uncoated soft copper stranded concentric compact round copper per ASTM B-496 for sizes up to and including 1000 kcmil. Larger conductor sizes shall be Class B compressed concentric per ASTM B-8. Aluminum conductors are not allowed.	
4	Insulation Material	Ethylene-Propylene Rubber (EPR) jacket and black Chlorosulfonated Polyethylene (CPE)outer jacket.	
5	Insulation Temperature	105degrees C, 140°C emergency rating, 250°C short circuit rating and shall pass UL and IEEE 383 and 1202 (for 1/0 AWG and larger).	
6	Insulation Level	133%.	
7	Shield	Copper Tape.	
8	Grounding	Corrugated Drain Wire.	
9	Losses	Conductors shall meet the electrical resistance requirements of ICEA S-68-516, Section 2.5.	
10	Installation	Underground: Install in triplex configuration in conduit. Not direct buried.	Refer Raceway and Boxes and Electrical Equipment ID guidelines for details.
		Cable Pulling: Cable pulling tensions and bending radii shall not exceed those recommended by the Cable manufacturer.	

Inland Empire Utilities Agency
A MUNICIPAL WATER DISTRICT

4.4 Grounding and Bonding

4.4 Grounding and Bonding

		LAST UPDATED	June, 2024
Item	**Parameter**	**Criteria**	**Notes**
0	Scope	This document outlines the requirements for grounding and bonding.	
1	Calculations	MV: Step and Touch Potential calculations.	
		LV: Calculations not required - shall comply with NEC requirements.	
2	Service Equipment Ground Electrode	Conductor: Bare, soft drawn copper, Class AA stranding, ASTM B 8.	
		Size (LV): NEC Table 250-66 for low voltage.	
		Size (MV): Based on calculations.	
3	Electrical Equipment Grounding	Conductor: Insulated, soft drawn copper, Class B stranding or solid, with green colored polyvinyl chloride insulation.	
		Size (LV): NEC Article 250-122.	
		Size (MV): Based on calculations.	
4	Bus and Bars	Silver plated, soft copper with cross section not less than 1 square inch per 1,000 ampere rating, but in no case less than 1/4-inch thick by 1-inch wide, ASTM B 187. Rating shall be per the NEC, unless otherwise noted.	
5	Exothermic Weld Connections	Manufacturer: Cadweld (Erico Products) "Exolon" Low Emission (Molds and powder).	
6	Mechanical Connectors	Manufacturer: Burndy Corp, Anderson, Thomas & Betts, 3-M Co. Type: Bolt-on bronze connectors, suitable for grounding and bonding applications in configurations required for the particular installation.	Mechanical connectors shall be permitted only when exothermic weld connections are not suitable or recommended by the manufacturer.
7	Flush Ground Plates	Cadweld B-162 series, B-164 series, or acceptable equal.	

		LAST UPDATED	June, 2024
Item	**Parameter**	**Criteria**	**Notes**
8	Flexible Jumper Strap	Flexible flat conductor, 480 strands of 30-gauge, bare copper wire; ¾-inch width, 9-1/2-inch-long; 48.25 kcMil, minimum. Protect braid with copper bolt-hole ends with holes sized for 3/8-inch diameter bolts.	
9	Bonding Plates, Connections, Terminals and Clamps	Provide electrical bonding plates, connectors, terminals and clamps, and accessories as recommended by the manufacturer for the specific applications. Components shall be high-strength, high-conductivity copper alloy.	
10	UFER Ground	In accordance with the latest edition of the National Electrical Code.	
11	Rod Electrodes	Copper-clad steel, 3/4-inch minimum diameter, 10 feet (3,000 mm) long, coupling type unless otherwise noted.	
12	Handholes	Handholes shall provide access to junction points and shall be marked "Ground".	
13	Instrument Ground	Instrumentation shall be grounded on a separate instrument ground, which shall be isolated from the main equipment ground. The instrument ground shall be connected to the main equipment ground with a single connection only.	
14	Grounding Well Components	Well Pipe: 8 inches NPS by maximum 12 inches long, precast concrete or fiberglass pipe with belled end.	
		Well Cover: Cast iron, high impact traffic rated cover with legend "GROUND" embossed on outer face.	
15	Anchors and Fasteners	Indoor Locations: Epoxy type anchors and heavy-duty, galvanized steel screws and bolts.	
		Outdoor Locations: Epoxy type or Red Head anchor bolts and stainless steel screws and bolts.	

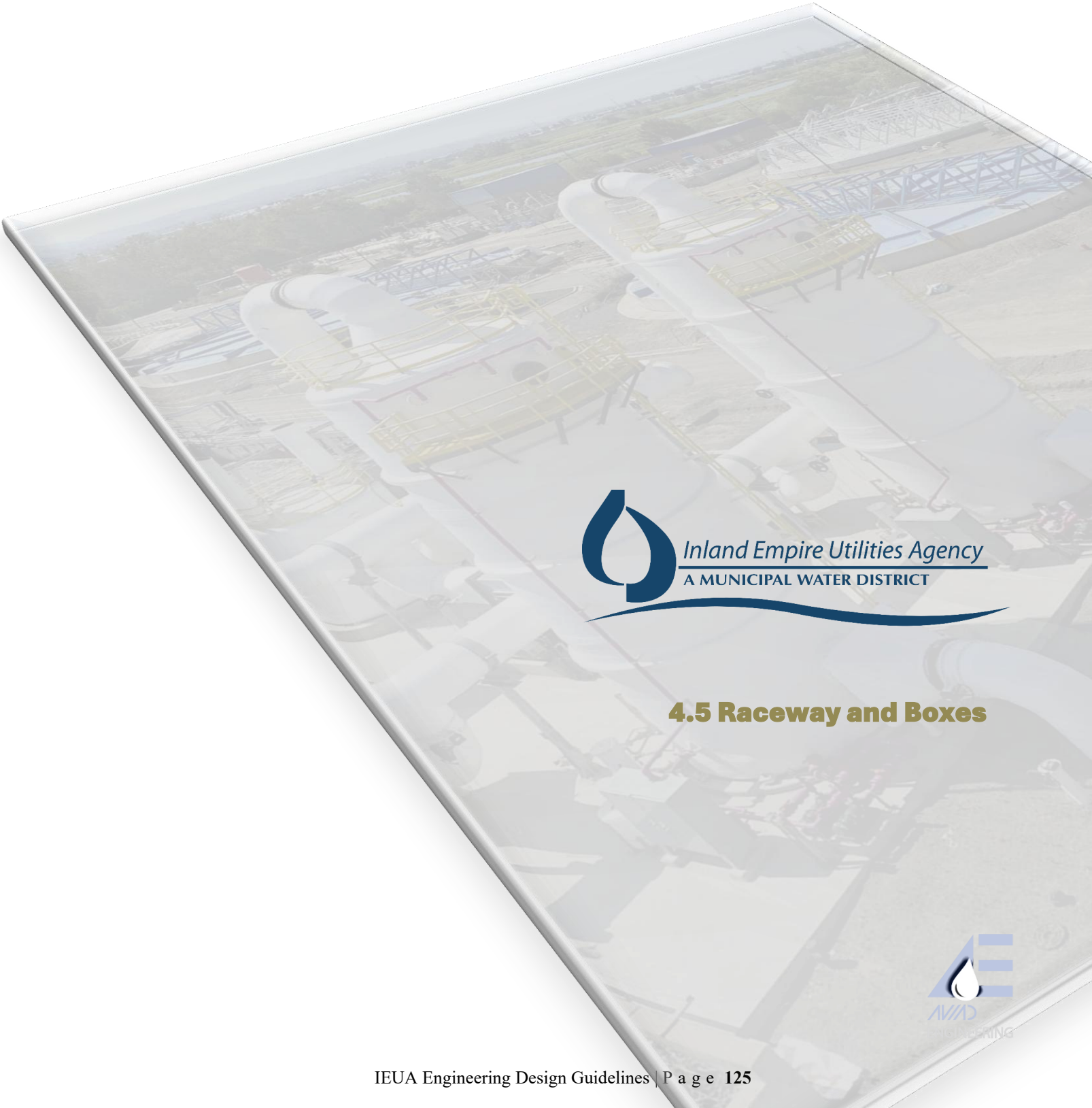

Inland Empire Utilities Agency
A MUNICIPAL WATER DISTRICT

4.5 Raceway and Boxes

4.5 Raceway and Boxes

		LAST UPDATED	Sep 1, 2025
Item	**Parameter**	**Criteria**	**Notes**
0	Scope	This document outlines the requirements for raceway, boxes, vaults, hand holes and manholes.	
1	Conduit	Underground more than 5 feet outside foundation wall: Schedule 40 non-metallic conduit encased in concrete.	Any alternative conduits shall require approval from IEUA.
		Underground within 5 feet from foundation wall: Rigid steel conduit, PVC coated. Provide cast metal or nonmetallic boxes.	All conduit types shall be UL listed.
		Under Slab or Below Grade: Schedule 40 PVC conduit encased in concrete. PVC Coated rigid steel factory bends greater than 22.5 degrees and for stub-ups through concrete slabs.	
		On Grade: Schedule 40 non-metallic conduit encased in concrete. PVC Coated rigid steel factory bends greater than 22.5 degrees and for stub-ups through concrete slabs.	
		Outdoor Locations, Above Grade: PVC coated rigid steel conduit. PVC coated cast metal outlet, pull, and junction boxes.	
		In Slab above Grade: Rigid Steel Conduit.	
		Exposed Dry Locations: PVC coated Rigid Steel Conduit. PVC coated cast boxes.	
		Concealed Dry Locations: Provide galvanized rigid steel.	
		Locations subject to Corrosive Atmosphere: PVC coated rigid steel. Provide PVC coated cast or sheet metal boxes.	

		LAST UPDATED	Sep 1, 2025
Item	**Parameter**	**Criteria**	**Notes**
		Commercial/Office Type Installation: EMT and IMC conduit is acceptable. This will not be accepted in any other type of installation.	
		Exposed Equipment Connection: Liquid-Tight Flexible Metal Conduit, plastic jacketed, galvanized steel, Anaconda "Sealtite" Type EF for general service areas, Type HC for high temperature when used under raised floor or in air plenums.	
2	Minimum Conduit Size	3/4 inch.	
3	Concrete Encasement	Concrete: 3,000-psi concrete.	
		Pouring: Consolidation of encasement concrete around duct banks by hand pudding, (no mechanical vibration).	
		Admixture: A workability admixture shall be used, which shall be a hydroxylated carboxylic acid type in liquid form. Admixtures containing calcium chloride shall not be used.	
		Pigment: Concrete contains integral red-oxide coloring pigment in the proportion of 8 pounds per cubic yard of concrete.	
4	Raceway Fittings	Couplings and Thread Protectors: Threaded conduit shall have coupling on one end and a thread protector on the other to protect the threads during normal handling and storage.	
		Metal Conduit Fittings: Galvanized iron or galvanized steel with steel conduit. Minimum of five threads for threaded conduit.	Metal conduits shall be joined by threaded couplings only, with the conduit ends butted.
		Liquid-Tight Flexible Conduit Fittings: Galvanized steel, T&B 53XX series insulated throat	

		LAST UPDATED	Sep 1, 2025
Item	**Parameter**	**Criteria**	**Notes**
		connector. Die-cast malleable fittings are not acceptable.	
		PVC Coated Fittings: Fittings for use with PVC coated RGS shall be PVC coated and shall be products of the same manufacturer as the conduit.	
		Non-Metallic Conduit Fittings: Material /strength characteristics to match conduit. Solvent welded as recommended by manufacturer. Non-metallic female "terminal" adapter for transition from non-metallic to metallic.	
		Classified Areas / Environment: Specify explosion proof, dust proof, etc. to suit area classification and environment.	
		Standard Bushings: Galvanized steel or malleable iron. Grounding Type Bushings (Conduit > 1"): Insulated bushings with insulated inserts in metal housings.	Provided for the termination of all conduits not terminated in hubs, couplings or insulated throat connectors.
		Locknuts:- One interior and one exterior. - Designed to securely bond the conduit to the box when tightened.- Will not be loosened by vibration.	For all conduit terminations not provided with threaded hubs and couplings.
		Watertight Conduit Unions: Appleton or Crouse Hinds Type UNF or UNY, or approved equal.	
		Rain tight Conduit: Meyer's rigid conduit hubs, or approved equal.	
5	Bends and Offsets	Requirement: Changes in direction of conduits shall be made with fittings or bends, meeting the requirements of NEC & minimum bend radius of the cable.	

		LAST UPDATED	Sep 1, 2025
Item	**Parameter**	**Criteria**	**Notes**
		Approved factory fittings: bends and offsets for non-metallic conduit or plastic coated steel shall be factory approved.	
		Maximum number of bends: No more than the equivalent of three 90 degree bends between boxes or outlets.	
6	Conduit Seal	Sealant: Seal conduit entries with approved mastic sealant, listed by the manufacturer.	
		Requirement: Conduits entering enclosures outdoors or in wet areas shall enter through Meyer's hubs, or approved equal, or threaded openings.	
7	Grounding	Raceway and Boxes: Grounded and bonded in accordance with the NEC.	
		Conduits and Raceways: Provide a solid or stranded bare copper or green insulated copper solid or stranded ground wire.	
8	Junction Box	Construction: Minimum 16 gauge galvanized steel with stainless steel hinged cover and neoprene gasket.	Material to be confirmed based on location.
		Door: Continuous, full length, piano type hinge and stainless steel pin on one side and captive screw on the other. Door shall be equipped with padlock hasp with sealing hole provisions.	
		Ground Lug Kit: #10-32 tapped hole provisions.	
		Finish: Wash and phosphate undercoat with ANSI 61 gray polyester power finish.	
9	Pull Box, Vault, Hand Hole, Manhole	Trafficable Cover: Any pull-box or manhole larger than 24 x 24 shall have trafficable steel covers. Cast-in frame, galvanized steel, adjustable, high impact traffic cover (H-20 load rated).	

		LAST UPDATED	Sep 1, 2025
Item	**Parameter**	**Criteria**	**Notes**
		Non-trafficable Cover: Concrete.	
		Construction: Pre-cast concrete.	
		Label: Cover shall be engraved with the words: “POWER”, “LIGHTING”, “CONTROLS”, COMM/DATA”, “TELEPHONE” or similar as applicable.	
		Location: All major changes in duct bank direction, every 200 ft for straight runs and at major equipment locations.	
		Other: Consider sump, lifting lugs, and conduit knock-outs.	
10	Installation of Raceways	Orientation: Generally parallel or perpendicular to roadways, buildings etc.	
		Spacers: Place spacers in duct bank minimum 10 feet apart.	
11	Drainage	Consider drainage of moisture from conduits and pull-boxes. Consider drainage arrangement for pull box.	
12	Re-Galvanizing	All steel conduit, exposed to weather or in contact with earth, shall be re-galvanized after threading with "Galvanizing Powder M-321" (American Solder and Flux Company); "Zincilate 810" (Industrial Metal Protective, Inc.); "Zinc Rich" coating (ZRC Chemical Products Company); or approved equal. The Contractor shall supply this protective material and shall apply it in the field.	
13	Pull Wire	Empty conduits shall have a polypropylene pull line with a minimum tensile strength of 200 lbs., Jet Line, Cat. No. 232, polyolefin, or approved equal. Pull line shall be secures at both ends to ensure future accessibility.	

		LAST UPDATED	Sep 1, 2025
Item	**Parameter**	**Criteria**	**Notes**
14	Underground Conduit Transition	Transition: Galvanized Rigid Steel Conduit shall be installed from below grade to above grade.	
		Corrosion Protection: Steel conduit in contact with earth shall be protected by "Scotchwrap" 10 mil tape applied in double thickness using 50 percent lap turns to 6 inches above grade and 6 inches beyond transition.	
		Expansion joints: Shall be used where required.	
15	Conduit Supports	Supports: Do not use wire, ceiling support wires or perforated pipe straps to support conduit.	
		Spacing: Within one (1) foot of junction boxes and fittings. Along conduit runs as follows: a. Conduit Size: ½ inch through 1-1/4 inch, Maximum Spacing: 5 feet. b. Conduit Size: 1-1/2 inch and larger 8 feet, Maximum Spacing: 8 feet.	

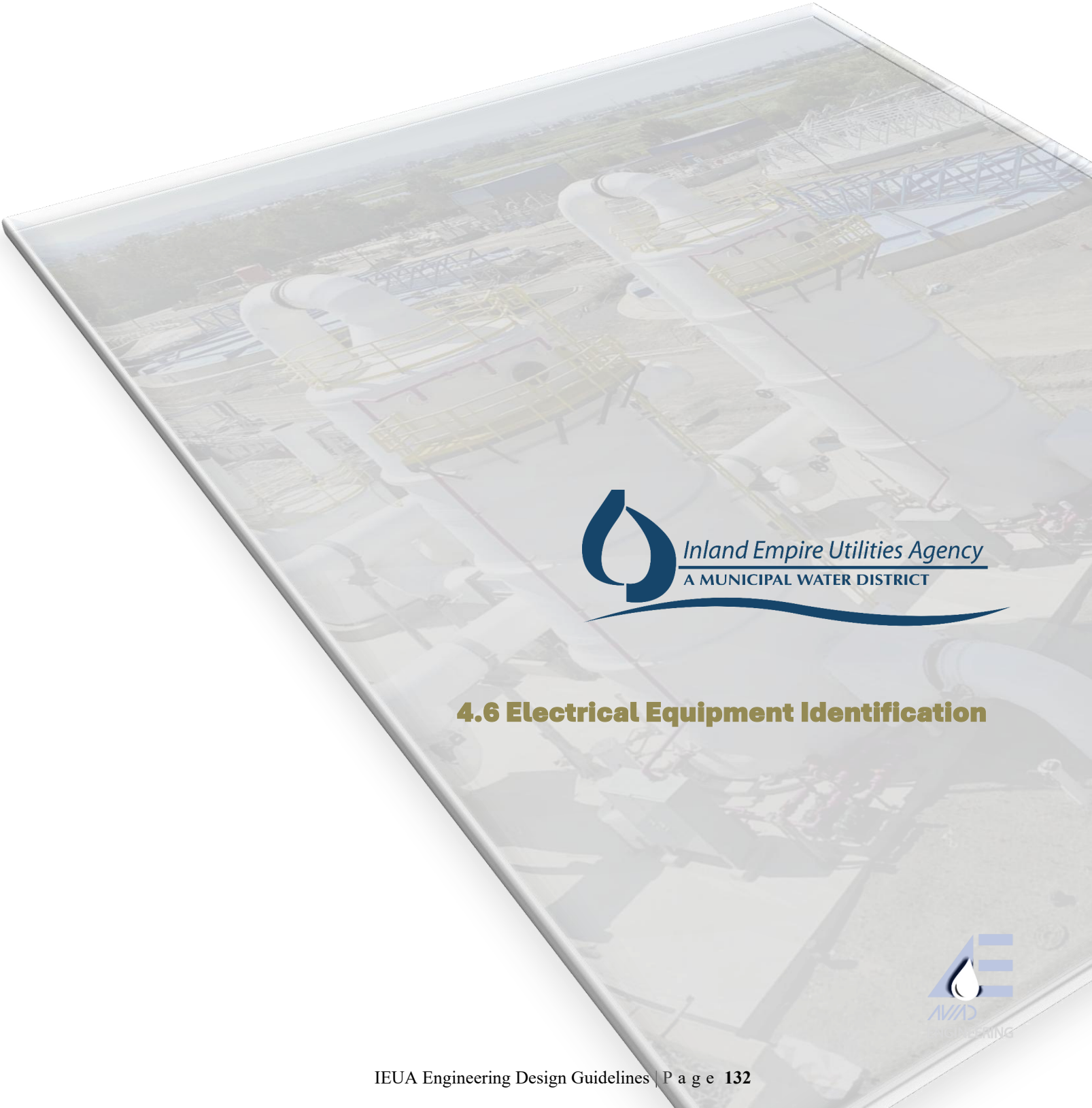

Inland Empire Utilities Agency
A MUNICIPAL WATER DISTRICT

4.6 Electrical Equipment Identification

4.6 Electrical Equipment Identification

		LAST UPDATED	June, 2024
Item	**Parameter**	**Criteria**	**Notes**
0	Scope	This document outlines all requirements for labelling and identification of electrical equipment and cables.	
1	Transformer Identification	1-inch high block letters cut in stencil and applied with yellow paint on a flat-black background. Label to include: - Transformer number. - Primary and secondary voltages. - Rated KVA. - Arc Flash protection label.	
2	Switchgear / Switchboards / MCC / Panel / Electrical Equipment Enclosure Identification	Engraved three layer laminated plastic, white letters on black background for normal power and white letters on red background for emergency power. Communications and control cabinets shall be labeled with white letters on green background. 1/2-inch letters for Equipment Number, 1/4" letters for additional details. Label to include: - Equipment number. - Voltage rating. - Current rating. - Number of phases. - Connection type. - Short circuit interrupting rating. - Source of power supply. - Arc Flash protection label.	
3	Receptacles, Outlets, Lighting Switch Identification	¼-inch high white characters on ½-inch wide black stick on tape placed on the wall directly above the device if the device is wall mounted. Place the tape on the device enclosure if the device is not wall mounted. Label shall identify the circuit number from which the receptacle or lighting switch is fed.	

		LAST UPDATED	June, 2024
Item	**Parameter**	**Criteria**	**Notes**
4	Disconnect Switches, Motor Starters, Control Stations, etc.	Engraved, laminated plastic, not less than 1/16-in thick by 3/4-in by 2-1/2-in with 3/16-inch high white letters on a black background. Label shall identify the device by the name of the equipment it serves.	
5	Junction or Terminal Box	Engraved, laminated plastic, not less than 1/16-in thick by 3/4-in by 2-1/2-in with 3/16-inch high white letters on a black background. Label shall identify the name or number of the junction or terminal box.	
6	Branch Circuits in outlet boxes	Wrap-around labels (T&B, BRADY or 3M) showing circuit number.	
7	Panelboard Directories	Complete 8 1/2-inch by 11-inch typewritten directory mounted in the inner door under a clear plastic cover set in a metal frame.	
8	Raceway	Refer Raceway and Boxes design guidelines.	
9	Conduit Markers	Type: Manufacturer's standard preprinted, flexible or semi-rigid, permanent, plastic-sheet conduit markers, minimum of 3 mils thick and 1-1/2-inch wide extending 360 degrees around conduits; designed for self-adhesive attachment to conduit.	
		Label: Indicate voltage of conductor(s).	
		Warning Labels: In addition to standard label, identify conduits containing conductors above 600-volts with "DANGER - HIGH VOLTAGE".	
		Location: Furnish markers for each conduit longer than 10 feet. Space 20 feet on center.	

		LAST UPDATED	June, 2024
Item	**Parameter**	**Criteria**	**Notes**
		Color: Unless otherwise indicated or required by governing regulation, provide orange markers with black letters. - Fire Alarm System: Red w/black letters. - Telephone System: Green w/yellow letters. - Data/Communication. System: White w/black letters. - Emergency System: Orange w/black letters.	
		Legend:- 15-kV System: Nominal 14.4-kV, 13.8-kV, 13.2-kV, 12.5-kV- 480 Volt System: Normal 480/277-volts.- 208 Volt System: Normal 208/120-volts.- Fire Alarm System: Fire alarm.- Telephone System: Telephone.- Data/Communication System: Data/communications.	
10	Conduit Identification	Tag: 19 gauge brass round tags with conduit number pressure stamped onto the tag and 1-1/2 inch predrilled mounting hole.	Confirm conduit numbering scheme with IEUA.
		Letter Size: Minimum height ¼-inches.	
		Installation: Attach with 316 stainless steel clamps at each end and at least once in every 50 feet near the midpoint of exposed conduit in ceiling spaces, surface mounted, and inside manholes and hand holes.	
		Above Grade Higher than 15 feet: Provide large white plastic ID nameplate with minimum 1/2" black engraved lettering.	
		Approved products: Seton Identification Products, National Band and Tag Company, Emedco.	
		Warning Tape: Buried conduit marked with buried warning tape along its entire length.	

		LAST UPDATED	June, 2024
Item	**Parameter**	**Criteria**	**Notes**
11	Wire Markers	Manufacturers: - Brady. - Thomas & Betts. - 3 M Co. - Or equal	
		Description: Cloth, tape, split sleeve, or tubing type wire markers, self-adhesive.	
		Locations: Each conductor at panelboard gutters, pull boxes, outlet and junction boxes, control panels, motor controllers and starters, and each load connection.	
		Legend: - Power and Lighting Circuits: Branch circuit or feeder number indicated on contract drawings. - Control Circuits: Control wire number indicated on shop drawings. - Neutral Conductors: Clearly indicate the branch circuit or feeder number the neutral serves. In multi-wire circuits where the neutral is shared, mark the neutral with the circuit number of the “A” phase.	
12	Fasteners	Secure all labels and nameplates with self-tapping stainless steel screws. Use contact type permanent adhesive where screws cannot or should not penetrate the substrate.	
13	Baked Enamel Danger Signs	Manufacturer's standard "DANGER" signs: 20 gauge steel; red, black and white graphics; 14-inch by 10-inch size preferred; recognized standard explanation wording (e.g. HIGH VOLTAGE, KEEP AWAY, BURIED CABLE).	
		High Voltage Metal-Clad Switchgear Enclosure Doors: “DANGER HIGH VOLTAGE – KEEP OUT, AUTHORIZED PERSONNEL ONLY”.	

		LAST UPDATED	June, 2024
Item	**Parameter**	**Criteria**	**Notes**
		Electrical Room Entry Doors: “DANGER HIGH VOLTAGE – KEEP OUT, AUTHORIZED PERSONNEL ONLY”.	
		Engine-Generator Unit enclosures: “CAUTION – USE HEARING PROTECTION".	
		Electrical equipment with multiple sources of power: "WARNING - THIS EQUIPMENT IS SUPPLIED BY MORE THAN ONE POWER SOURCE". Then list the sources.	
14	Underground Warning Tape	Width: Minimum 3-inch.	
		Thickness: Minimum 5 mm.	
		Type: Foil bonded polyethylene tape, detectable type, with suitable continuous warning legend describing buried electrical lines.	
		Color: Conform to APWA uniform color code using ANSI Z535.1 safety colors. Text shall be black, 2-inch minimum letters.	

	Labels	• Wire labels within a panel should have consistent font types and size
		• Patch cable labeling should be as follows:
		  ○ Location:PatchPanel#:PanelPort#s
		  ○ SwitchName:SwitchPort
		For example:
		  ○ PC4:PPA:1-2
		  ○ RP5SGS1B:P2	

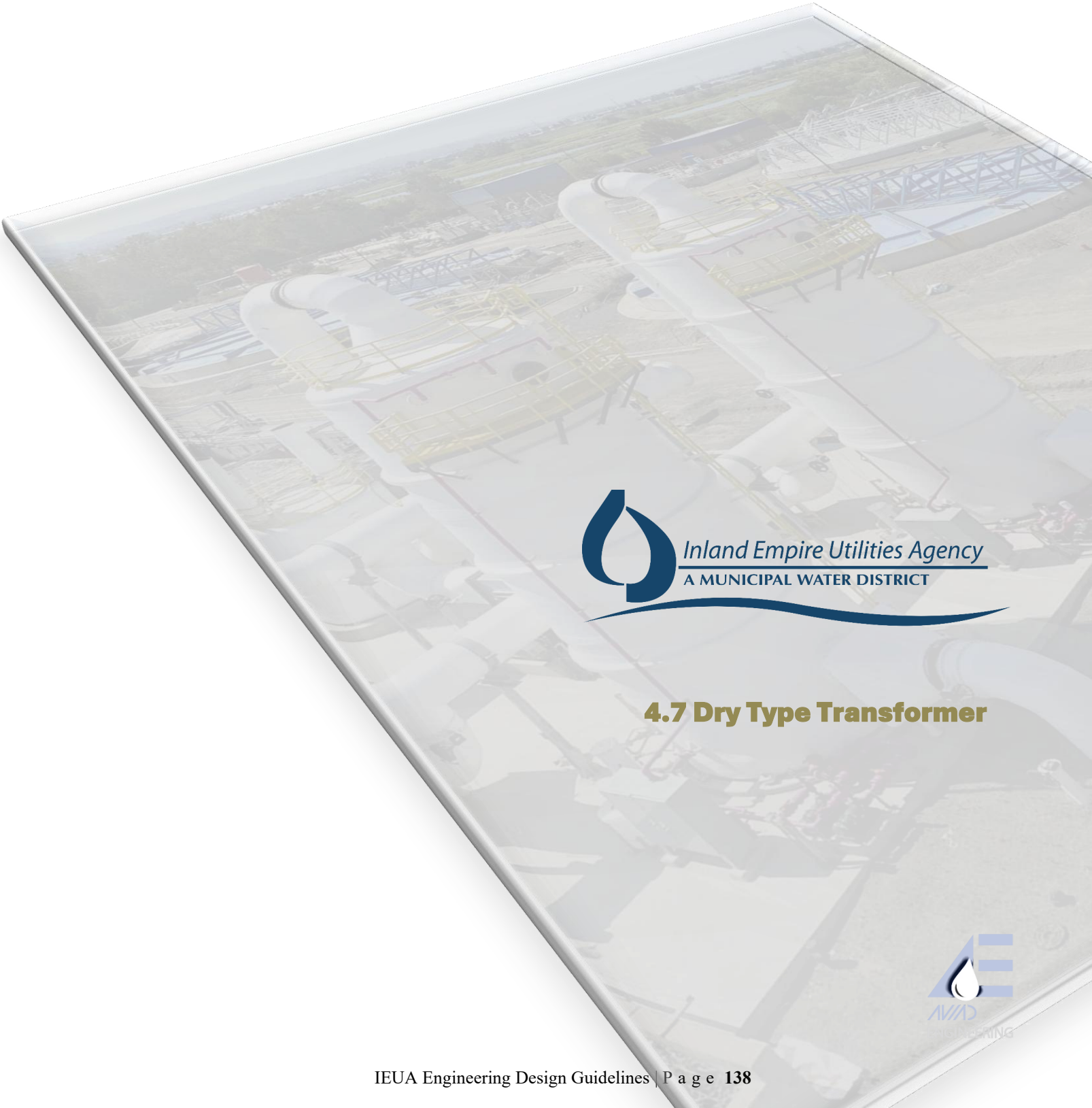

Inland Empire Utilities Agency
A MUNICIPAL WATER DISTRICT

4.7 Dry Type Transformer

4.7 Dry-Type Transformer

		LAST UPDATED	June, 2024
Item	**Parameter**	**Criteria**	**Notes**
0	Scope	This document outlines all requirements for single-phase and three-phase general purpose, individually mounted, dry-type transformers of the two-winding type, self-cooled, with primary voltage between 480 V and 35-kV, secondary voltages 600-volts and less.	
1	Manufacturers	- Cooper Transformer. - Cutler Hammer / Eaton Corp. - General Electric Company. - Siemens. - Square D Company / Schneider Electric. - Approved equal.	
2	Operation	Transformers shall be designed for continuous operation at rated kVA, for 24 hours a day, 365 days a year operation, with normal life expectancy as defined in ANSI C57.96.	
3	Efficiency	Energy efficient type, meeting the requirements of NEMA TP 1. High grade laminations required.	
4	Standard Dry-Type Transformers	NEMA ST-20 Class AA dry-type. All three-phase transformers shall have three-winding primaries and three-winding secondary.	
5	Insulation System	Insulation as follows:a. 2-kVA and below - 150°C insulation system.b. 3 through 30 kVA - 180°C insulation system.c. 45-kVA and above - 220°C insulation system.Required performance shall be obtained without exceeding the insulation indicated temperature rise in a 40°C maximum ambient, with a 30°C average over 24 hours.	

LAST UPDATED June, 2024			
Item	**Parameter**	**Criteria**	**Notes**
		Flame-retardant: Insulation material shall be flame-retardant and shall not support combustion as defined in ASTM Standard Test Method D635.	
		Temperature Rise (30 kVA to 225 kVA): 115°C temperature rise above 40°C ambient. 115°C rise transformers shall be capable of carrying a 15 percent continuous overload without exceeding 150°C rise in a 40°C ambient.	
		Temperature Rise (300 kVA to 500 kVA): 80°C temperature rise above 40°C ambient. 80°C rise transformers shall be capable of carrying a 30 percent continuous overload without exceeding a 150°C rise in a 40°C ambient.	
		Surface Temperature Rise: Limit surface temperature rise to maximum of 50°C.	
6	Core and Coil Assemblies	Designer shall specify latest industry standard construction for dry type transformer.	
7	Taps	25 kVA and larger: Primary windings with 6 taps; two 2.5 % increments above full-rated voltage and four 2.5 % increments below full-rated voltage.	
		< 25 kVA: Primary windings with two taps at 5 percent below full rated voltage.	
		< 1 kVA: No taps are required.	
8	Basic Impulse Level	Designer shall specify required BIL.	
9	Grounding	Ground core and coil assembly to enclosure by means of a visible flexible copper-grounding strap.	

		LAST UPDATED	June, 2024
Item	**Parameter**	**Criteria**	**Notes**
10	Enclosure	Material and Finish: The enclosure shall be made of heavy gauge steel and shall be degreased, cleaned, primed, and finished with ANSI 61 color weather-resistant enamel.	
		Wiring Enclosure: Suitable for conduit entry and large enough for convenient wiring.	
		Temperature: The maximum temperature of the enclosure shall not exceed 90°C.	
		On units rated below 3 kVA, encapsulated, the enclosure construction shall be totally enclosed, non-ventilated, NEMA 3R, with lifting eyes as required.	
		On units rated 3 kVA and above, the enclosure construction shall be ventilated NEMA 1 suitable for indoor use, with lifting lugs as required. All ventilation openings shall be protected against falling dirt and water.	
		On outdoor units, the enclosure shall be ventilated, NEMA 3R suitable for outdoor use, with weather shields over ventilation openings.	

Inland Empire Utilities Agency
A MUNICIPAL WATER DISTRICT

4.8 Liquid-Filled Transformer

4.8 Liquid-Filled Transformer

		LAST UPDATED	June, 2024
Item	**Parameter**	**Criteria**	**Notes**
0	Scope	This document covers liquid-filled, pad mounted distribution transformers with primary voltage between 2-kV and 35-kV, secondary voltages 600-volts and less, and capacity ratings between 50-kVA and 2,500-kVA.	
1	Manufacturers	- Cooper Transformer. - Cutler Hammer / Eaton Corp. - General Electric Company. - Siemens. - Square D Company / Schneider Electric. - Approved equal.	
2	Cooling Class	1. Class OA 65° C, self-cooled (OA) for transformers rated less than 1,500-kVA. 2. Class OA/FA, 55° / 65° rise, self-cooled (OA) and equipped with thermostats, and control system for future forced air (FFA) cooling (provisions to add fans for FA rating) for transformers rated 1,500-kVA and above.	
3	Insulating Liquid	Oil conforming to IEEE C57.106.	Or FR3 or similar non-flammable, bio-degradable liquid.
4	Construction	Designer shall specify latest industry standard construction.	
5	Taps	+/- 2.5%, +/- 5 %, -7.5 % and -10 % standard primary taps (6 taps).	No load externally operated
6	Basic Impulse Level	Designer shall specify required BIL.	
7	Grounding	Ground core and coil assembly to enclosure by means of a visible flexible copper-grounding strap.	
8	Construction	Door: Three point latching door for security.	

		LAST UPDATED	June, 2024
Item	**Parameter**	**Criteria**	**Notes**
		Tank Cover (45 to 1,000-kVA): Bolted cover for tank access.	
		Tank Cover (1,500-kVA to 2,500-kVA): Welded cover with hand hole.	
		Drain Valve: One-inch drain valve with sampling device in low-voltage compartment.	
		Fill Plug: One-inch upper fill plug.	
		Cabinet (45 kVA to 1000 kVA): Minimum 20-inch deep cabinet.	
		Cabinet (1,001-kVA to 1,500-kVA): Minimum 24-inch deep cabinet.	
		Cabinet (1,501 kVA to 2,500 kVA): Minimum 30-inch deep cabinet.	
		Divider: Steel divider between high-voltage and low-voltage compartments.	
		Lifting lugs: Quantity (4) to suit weight and size of transformer.	
		Ground Pads: Stainless steel ground pads (45-kVA to 500-kVA), Stainless steel NEMA 2-hole ground pads (750-kVA to 2,500-kVA).	
		Cabinet Hinges and Mounting Studs: Stainless steel.	
		Bolts: Penta-head captive bolt.	
		Insulation: Insulating Blankets for secondary terminations shall be ASTM D1048 Type II, Class 1. Insulating Blankets shall be Salisbury Salcor blend of prime EPDM that is highly flexible, corona resistant polymer with anti-aging and weathering qualities, or equal.	
9	Accessories	Standard Accessories: IEEE C57.12.00 and ANSI C57.12.55.	
		Pressure Relief Device: Automatic.	
		Liquid level gauge: Required.	
		Pressure vacuum gauge: Required.	

LAST UPDATED			June, 2024
Item	**Parameter**	**Criteria**	**Notes**
		Thermometer: Dial Type.	
		Fuses: Bay-O-Net fuses in series with ELSP partial range current limiting fuses (Bay-O-Net and current limiting type fuses sized for the transformer).	
		Spares: Three (3) spare fuse links for each transformer.	
		Signs: High voltage warning signs.	
10	Bushings	Bushing Wells: RTE (15-kV, 200-amp type HTN) bushing wells conforming to IEEE 386.	
		Low voltage Bushings (through 500 kVA): 4-, 6-, or 8- hole spade.	
		Low voltage Bushings (750-kVA to 2,500-kVA): 6-, 8-, or 10-hole spade'. 10-hole equipped with supports).	
11	Primary Terminations	Insulated connectors (load-break type elbow connectors with test point). Include: - Bushings. - Cable shield adaptor. - Insulated parking stand bushings. - Insulated protective cap for each insulated parking stand bushing.	
12	Finish	Wash Treatment: Phosphate wash pretreatment to assure coating adhesion and inhibit corrosion.	
		Primer: Three (3) step electrodeposited and oven-hardened epoxy primer (E-coat) to protect against moisture, salt, and other corrosives.	
		Finish: Polyester powder coat finish - 4 mils thick to provide resistance to abrasion and impact.	
		UV Protection: Urethane top coat.	
		Finish Color: Manufacturer's standard dark gray finish (ANSI 61).	

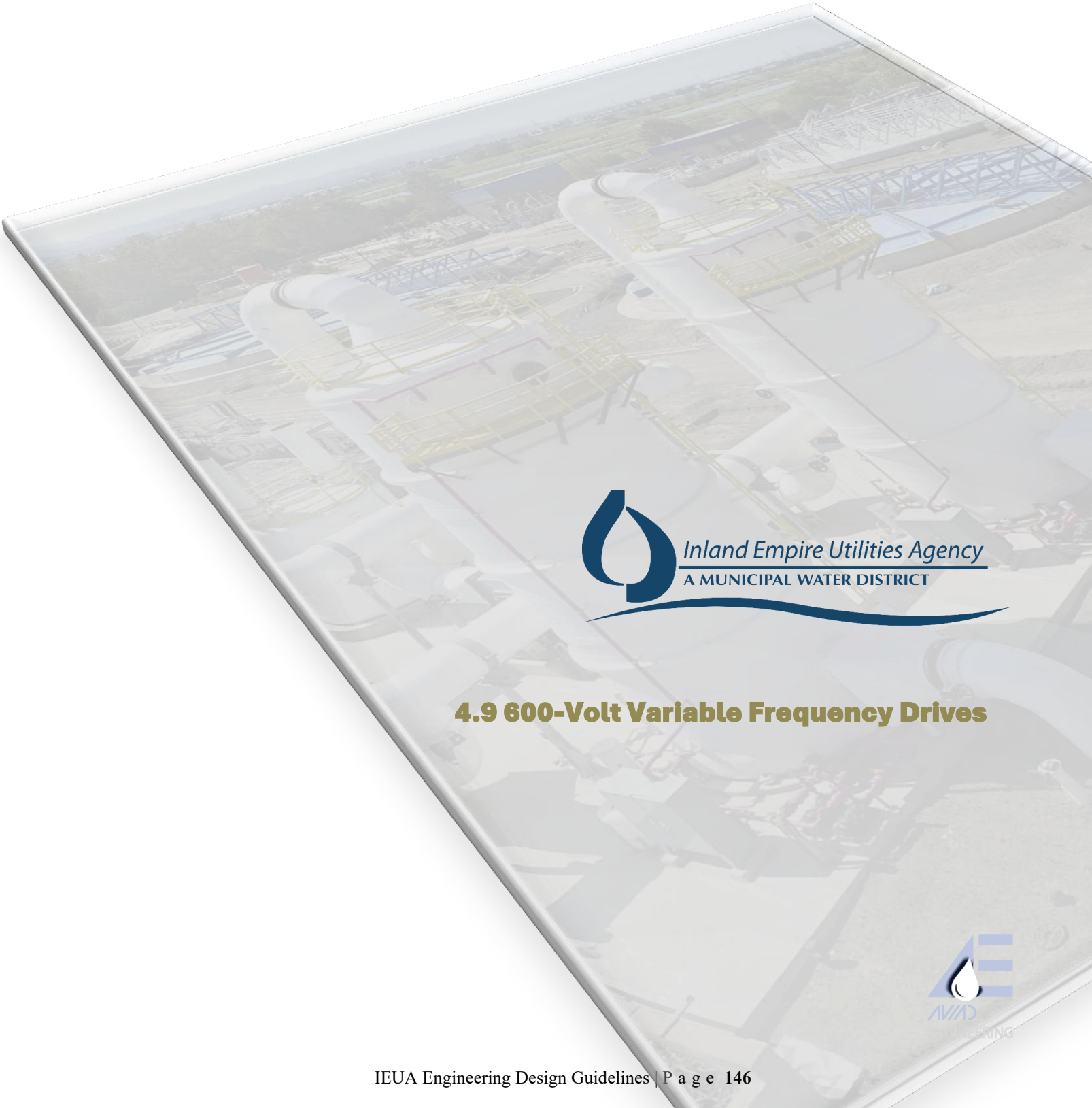

Inland Empire Utilities Agency
A MUNICIPAL WATER DISTRICT

4.9 600-Volt Variable Frequency Drives

4.9 600-Volt Variable Frequency Drives

LAST UPDATED			Sep 1, 2025
Item	**Parameter**	**Criteria**	**Notes**
0	Scope	This document covers Variable Frequency, Variable Voltage Drives for speed control of motors up to 600 VAC.	
1	Manufacturers	Preferred: - Allen Bradley / Rockwell Automation The following may also be considered: - Square D Co. / Schneider Electric - Cutler-Hammer/ Eaton	Consideration of Square D Co. / Schneider Electric and Cutler-Hammer/ Eaton are applicable for rehab and retrofit conditions.
2	Rating	VFDs rated less than 50 HP: 6-pulse units.	
		VFDs rated 50 HP and larger: 18-pulse units.	
3	Power Supply	VFD shall be designed to operate from a three phase, 60 Hertz (+/- 2 Hz) power supply and control motors with voltage rating as indicated on drawings.	
4	Power Factor	Displacement Power Factor of 95 % or higher throughout the entire operating speed range, measured at VFD input Terminals.	
5	Service Factor	1.0.	
6	Environment	VFD shall be capable of operation in an ambient environment of +10 to +40 degC, 0 to 95% non-condensing humidity.	
7	Input Protection	- Circuit Breaker Per UL 489 with minimum symmetrical interrupting capacity to match source switchboard and door interlocked external operator; or - Input line high-speed, current limiting fuses rated 200 kA interrupting current specifically designed for solid state applications in conjunction with a solid state instantaneous overcurrent trip unit set	

		LAST UPDATED	Sep 1, 2025
Item	**Parameter**	**Criteria**	**Notes**
		at 180 percent of motor full load current rating.	
8	Rectifier	Rectifier: Full wave bridge rectifier. Silicon Controlled Rectifiers (SCR) are not acceptable.	
		Power factor and Phase Rotation: Insensitive to three phase rotation of the ac line and shall not cause displacement power factor of less than .95 lagging under any speed and load condition.	
9	Inverter	Variable Voltage, Variable Frequency, Pulse Width Modulated (PWM). Other types of inverters such as current source inverter (CSI), voltage source inverter (VSI), and flux vector drive (FVD) units are not acceptable.	
10	Overload Capacity	120 percent of rated full load current for one minute at maximum ambient temperature (150 percent for constant torque VFD).	
11	Settings	Acceleration /deceleration time: Independently adjustable from one second to 60 seconds.	
		Full-time current limiting: Adjustable to limit the current to a preset value which shall not exceed 120 percent of the controller rated current, whilst maintaining V/Hz ratio constant.	

		LAST UPDATED	Sep 1, 2025
Item	**Parameter**	**Criteria**	**Notes**
		Short time starting override: Shall allow starting current to reach 175 percent of controller rated current to maximum starting torque.	
		Minimum and maximum output frequency: Adjustable over the following ranges: a. Minimum frequency 6 Hz to 50 percent of maximum selected frequency. b. Maximum frequency 40 Hz to 60 Hz.	
12	Efficiency	The controller efficiency shall not be less than 95 percent at 100 percent speed, and not less than 85 percent at 60 percent speed.	
13	Braking/ Coasting	The controllers shall be capable of being restarted into a motor coasting in the forward direction without tripping. The controllers shall be capable of flux braking at start, to stop a motor coasting in the reverse direction before starting speed ramp-up. Coast, controlled ramp, or dc injection selectable modes of stopping.	
14	Fault Reset	VFD shall include external fault reset capability. All the necessary logic to accept an external fault reset contact shall be included.	
15	Internal Protection	- Instantaneous over-current. - DC bus over-voltage.- Static overspeed (over-frequency) protection. - De-saturation circuit (drive inverter section transistor base current to zero during a fault). - DC bus discharge circuit with indicator.	

		LAST UPDATED	Sep 1, 2025
Item	**Parameter**	**Criteria**	**Notes**
16	Output Protection	- Over-voltage. - Over-frequency. - Static Over-speed. - Stall.	
17	Primary Control Signals	All VFDs must have primary control signals hardwired to I/O of the controller. Additional status and diagnostics data will be transmitted over Ethernet. Primary Control Signals: - Hand Status - Auto Status - Run Command - Run Feedback - Speed Command - Speed Feedback	All I/O needs to be wetted from the VFD
18	Controls	- Ethernet IP card. - Keypad with integral display for controlling the VFD, manual speed adjustment, resetting faults, and setting drive parameters. Keypad can be remote mounted. Parameters can be stored in non-volatile memory on the keypad. - "Hand-off-auto-bypass" switch. - Bypass "stop-start" push buttons. - Control circuits <= 120 volts and supplied by internal control power transformers. Control power transformers shall have additional capacity as required by external devices indicated on the drawings. Control power transformers shall be equipped with fuses in each primary and secondary phase leg and one secondary lead grounded. - Analog 4-20mA speed input and output for remote speed indication and speed control - Internal PID controller	

		LAST UPDATED	Sep 1, 2025
Item	**Parameter**	**Criteria**	**Notes**
		- Contacts for 'run status', 'auto-selected' and 'fault' - Drivers shall communicate Ethernet CIP without use of third party communication	
19	Hardwired Shut-Downs	Hardwired shutdowns may vary depending on application. Not every item below will apply and there may be additional items not listed. Below are some examples of signals which will terminate at the local VFD/overload and read over ethernet. These signals are hardwired to shut down the pump/motor: 1) Motor Over Temperature Alarm 2) VFD or Motor Failure 3) Motor Overload 4) E-stop 5) High Discharge Pressure 6) Low Suction Pressure 7) Backflow	Hardwired Shut-Downs with Status to SCADA over Ethernet Note that all motor protection alarms and emergency stops will be hardwired to shut down the motor, which will continue to protect the motor in the event of a loss of ethernet connection or failure of the controller. These alarms, hardwired to shut down the motor, are not capable of being bypassed from SCADA.
20	Ethernet Requirements	Ethernet for all VFDs should be routed and designed in a way to minimize single points of failure. For equipment that has redundancy, e.g. multiple influent pumps, there should be at least 2 RedBoxes to minimize the possibility of all influent pumps failing at once. This same concept should be applied when designing the I/O layout for all pumps/motors. The contractor needs to be able to present/demonstrate to IEUA how they minimized single points of failure in the design.	

		LAST UPDATED	Sep 1, 2025
Item	**Parameter**	**Criteria**	**Notes**
21	Remote Commands from SCADA over Ethernet	1) Remote Reset	
22	SCADA Alarms	1) Communication alarm for any loss of communication with any device 2) Power failure alarm for loss of any power supply to a Stratix ethernet switch.	
23	Monitoring Signals over Ethernet	1) Individual Alarms a) Seal Leak Failure 2) Power Monitoring a) kW b) kWh c) Volts d) Amps e) Volt-amp reactive	Monitoring signals may vary depending on application. Not every item will apply and there may be additional items not listed
24	Wiring	Designer shall provide specifications to ensure a neat wiring installation with top/bottom entry specified and details similar to control panel design guideline.	
25	Enclosure	Enclosure: The complete drive package, including input line reactors, fuses, circuit breakers, isolation transformer (where required), filters (where required), shall be installed in a dead-front enclosure. Enclosure shall conform to NEMA 250, NEMA ICS 6 and NEMA ICS 7 requirements.	
		Mounting & Lifting: Suitable mounting and lifting facilities shall be provided.	
		Identification: Relays terminals and special devices inside the enclosure shall have permanent markings to match the identification on the manufacturer's wiring diagrams.	

		LAST UPDATED	Sep 1, 2025
Item	**Parameter**	**Criteria**	**Notes**
26	Diagnostics	The control panel shall provide diagnostics for the type of fault, warning, etc. The drive shall be capable of storing 10 events with a time and date stamp for each event.	
27	Sequence of Operation	- Run command and a speed command from the master controller. - When VFD selector switch is in "Hand" position the load runs and speed is controlled from the VFD control panel - When the selector switch is in the "Off" position, the load does not run - When the selector switch is in the "Remote" position, the load shall be turned on and off by the master controller and the speed shall be controlled by the master controller. The VFD shall generate a discrete output signal for transmission to the master controller when the VFD selector switch is in the "Remote" position. This output signal shall be suppressed if remote control selector switch is not in "Remote" position. - In specific applications (if required), when the VFD selector switch is in the "Bypass" position, the load shall be turned on and off by the bypass "Start-Stop" push buttons using the bypass contactor. The VFD shall not be used to control the load when the selector switch is in the "Bypass" position.	
28	Bypass	Pilot Light: Bypass will have pilot light to indicate whether operating in bypass or normal, if required. Manual Control: Full manual control when bypassed, if required. Motor overload protection: Still required to operate in Bypass mode, if required.	Designer to confirm with IEUA whether bypass is required. For example where there is a standby pump, confirm whether individual VFD bypass contactors are necessary.

		LAST UPDATED	Sep 1, 2025
Item	**Parameter**	**Criteria**	**Notes**
		Transition: Transition to manual bypass only when VFD at zero speed, if required.	
29	Harmonic Distortion	Point of Common Coupling: Horizontal bus of switchboard supplying power to VFD.	
		Limits: IEEE 519.	
		Worst case operating conditions: 10 percent total harmonic voltage distortion and commutation notches up to 36,500 volt-microseconds.	
		Harmonic filters: as required.	

Inland Empire Utilities Agency
A MUNICIPAL WATER DISTRICT

4.10 Lighting

4.10 Lighting

		LAST UPDATED	June, 2024
Item	**Parameter**	**Criteria**	**Notes**
0	Scope	This document outlines the requirements for lighting and lighting controls.	
1	Luminaire Manufacturers	Halophane, Lithonia, or others as approved by IEUA.	
2	Illumination	Local codes: Where minimum requirements in the local codes are more stringent than the guideline requirements the more stringent requirements shall take precedence.	
		Plant road lighting: 0.5 fc	Measured at the surface to be illuminated.
		General Plant Areas (not task lighting): 15 fc	Measured at the surface to be illuminated.
		Working areas, visual tasks performed occasionally: 30 fc, 0.6 avg/min.	Measured at the surface to be illuminated.
		Work Station/Task lighting: 50 fc	Measured at the surface to be illuminated.
		Plant Road lighting: 0.5 fc	Measured at the surface to be illuminated.
		Process/Mechanical Room: 30 fc	Measured at the surface to be illuminated.
		Truck Loading Area: 30 fc	Measured at the surface to be illuminated.
		Electrical Room: 35 fc	Measured at the surface to be illuminated.
		Control Room: 50 fc	Measured at the surface to be illuminated.
		Restroom: 10 fc	Measured at the surface to be illuminated.
		Storage Room: 10 fc	Measured at the surface to be illuminated.
		Stairs: 5 fc	Measured at the surface to be illuminated.
3	Luminaire Type	Outdoor: Dark Sky Compliant LED lighting shall be used.	

		LAST UPDATED	June, 2024
Item	**Parameter**	**Criteria**	**Notes**
		Indoor: LED lighting shall be preferred, fluorescent lighting accepted.	
4	Ballast / Driver	- High Efficiency. - High Power Factor. - Rapid Start. - Low Harmonic.	
5	Accessibility	Requirement: All lighting shall be accessible for maintenance.	
		Outdoor lighting poles: Shall be hinged poles, where feasible, to allow luminaire to be lowered for access.	
		Wall Mounting: Consider mounting luminaires on side wall instead of ceiling where high ceilings or equipment under the luminaire may make the fixture difficult to access.	
		Lowering Mechanism: Consider lowering mechanisms for ceiling-mounted fixtures where ceiling is higher than 8-1/2 ft.	
6	Emergency	Battery-backed emergency lighting and exit signs: Shall be installed to enable safe exit from any area.	
		Egress Path: Include lighting of stairways and ladders required to exit an area and lighting of any paths which may have limited access or obstacles.	
7	Security	Security lighting shall be provided with time clock control and passive infra-red motion detector control.	Designer shall confirm whether lighting is required for security purposes.
8	Photocells	All outdoor lighting is to have photocell control with motion sensor control.	
9	Occupancy Control	All indoor lighting to have occupancy lighting control to turn off the light when no one is present.	

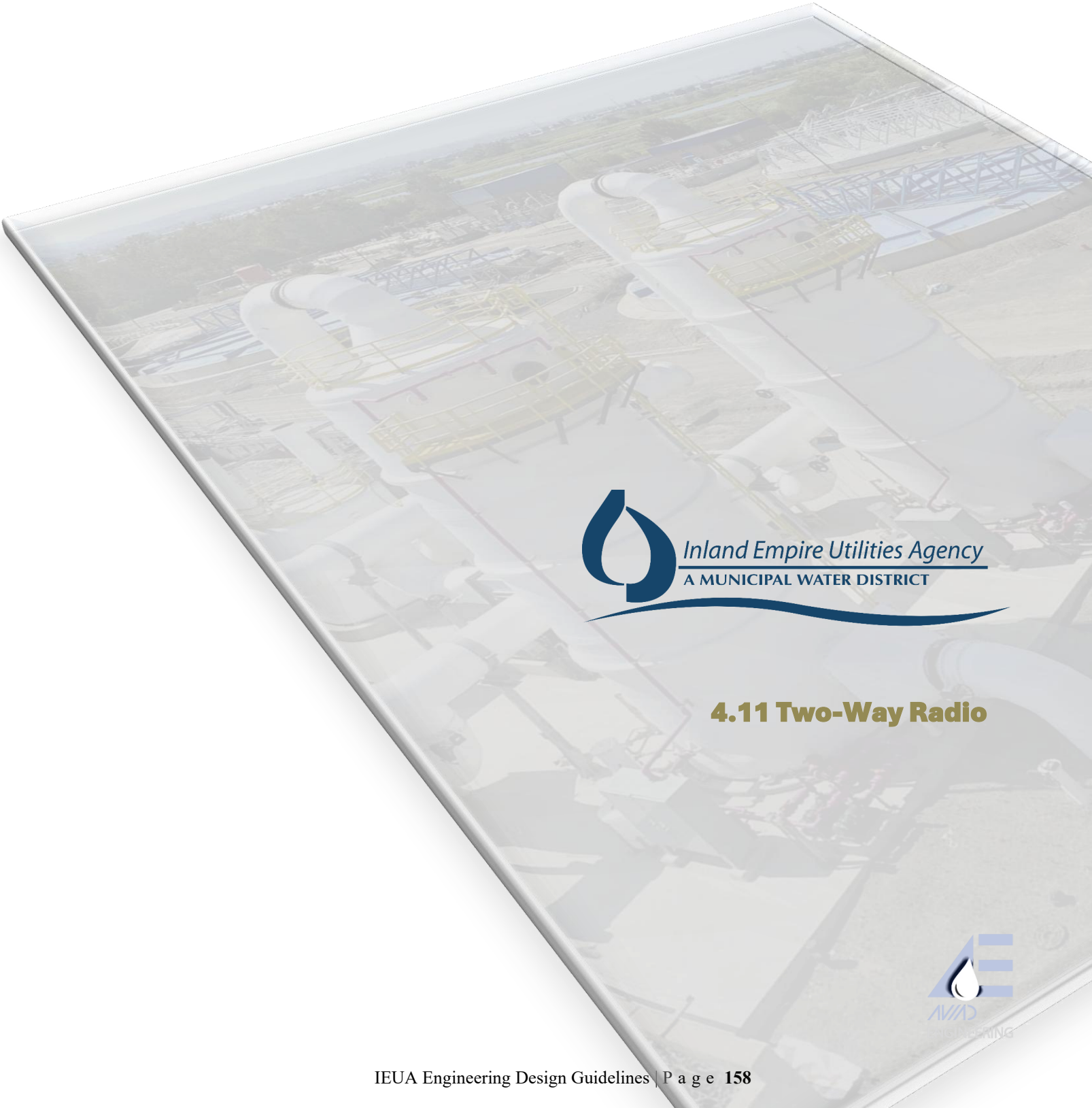

Inland Empire Utilities Agency
A MUNICIPAL WATER DISTRICT

4.11 Two-Way Radio

4.11 Two-Way Radio

		LAST UPDATED	June, 2024
Item	**Parameter**	**Criteria**	**Notes**
0	Scope	This document outlines all requirements for a two-way radio system for high speed wireless data transmission from point to point within the SCADA system, consisting of wireless communication links, antenna systems, uninterruptable power supplies, communication link surge protection and power line surge protection.	Two way data Communications bridge will consist of a point system utilizing licensed radio frequencies in the 18 GHz and 23 GHz bands.
1	- Radio Manufacturer / Model	- - Cambium Networks (4.9 GHz). - Cambium Networks (18 GHz point-to-point licensed) - preferred. - PTP 800 series, 18 and 23 GHz - Cambium Networks PTP-820, licensed frequency radios	Licensed only, unless approved. Each new radio must include a license for management in Cambium Networks Wireless Manager
2	- Antenna Manufacturer	- Commscope/Andrews - RadioWaves	
3	Compatibility	The system shall be compatible with the existing two-way radio equipment.	
4	Electrical Requirements	Power supply to the radio shall be via a battery backed source or UPS.	
5	Communication Link Surge Protection	In accordance with NFPA 780.	
6	Power Line Surge Protection	Radio equipment connected to AC circuits: Shall be protected from power line surges.	
		Standards: Shall meet the requirements of IEEE C62.41.1 and IEEE C62.41.2.	
		Fuses: Shall not be used for surge protection.	

LAST UPDATED June, 2024			
Item	**Parameter**	**Criteria**	**Notes**
7	Radio Path Study	Designer shall allow for a radio path study to be performed to confirm site specific communication requirements, determine system deficiencies and determine antenna mounting heights, unless otherwise provided by the Agency.	
8	Antenna Mounting	Mount using manufacturer provided heavy duty listed mast bracket. No chain type mounting hardware. Only solid, bolt on mounts to be used.	
9	Radio System Component Mounting	Other than the antenna and cabling, install radio system components within an enclosure on a back panel.	
10	Antenna Requirements	Omni Directional Antenna: Use only where shown.	
		System Gain: Cabling shall be installed to provide adequate system gain.	
		Environmental Design Conditions: 201.2 km/hour 125 mph wind and 13 mm 1/2-inch radial ice.	
		Material: Fiberglass.	
		Lightning protection: NFPA 780.	
		Grounding conductors: minimum 32-strand, No. 10AWG copper.	
11	Antenna Cable Requirements	Transmission cable: low loss Times Microwave type LMR-400 with N type connectors and strapped at twenty four inch intervals using stainless steel straps.	
		Continuity: Cable shall be one continuous section without splices or connectors other than at the ends.	
12	Grounding & Bonding	Ground and bond all system components in accordance with IEEE Standard 142.	
13	Antenna Installation	Tubular radiator elements: Plugged to prevent wind vibration fatigue.	

LAST UPDATED June, 2024			
Item	**Parameter**	**Criteria**	**Notes**
		Vertical tubular elements: Drain holes near the bottom.	
		Exterior connections: Snug, filled with silicone grease, and properly sealed with heat-shrink wrap suitable for installation in specified ambient conditions.	
14	Antenna Structures (Towers and Monopoles)	Standards: Radio and antenna structure design and installation to conform with current revision of ANSI/TIA/EIA 222.	
		Acceptable manufactures: - Valmont - Sabre Industries - Or equal	
15	Security	All radio links will be supplied with 256 bit encryption.	Standalone security panels for each building. The general contractor will provide conduit for the security panels. IEUA will contract separately for the security system from Southwest.
16	Warranty	Require two year extended warranty.	Potentially combine Remote I/O with remote terminal
17	Network Ports	Provide one business network port in each electrical room or control room for VOIP phones. Provide SCADA control cabinet – thin client is referred where feasible. Rear access is preferred where practical.	
18	Fire Alarm	Fire alarm for all new buildings	

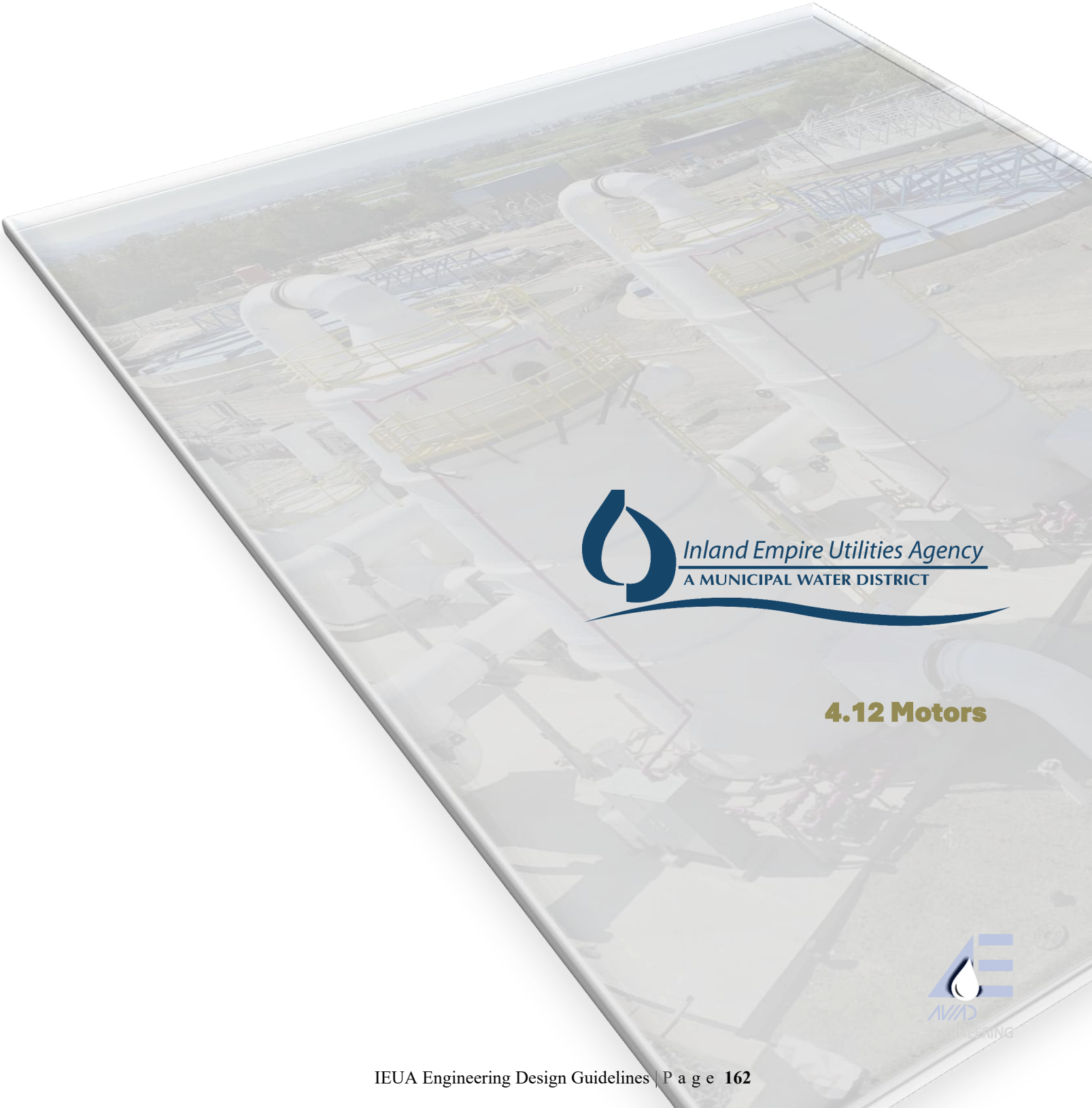

Inland Empire Utilities Agency
A MUNICIPAL WATER DISTRICT

4.12 Motors

4.12 Motors

		LAST UPDATED	June, 2024
Item	**Parameter**	**Criteria**	**Notes**
0	Scope	This document covers motor design requirements. This does not include actuator motors.	
1	Manufacturers	- WEG. - US Motors / NIDEC. - BALDOR. - SIEMENS. - GE. - Or similar approved.	
2	Winding Temperature Protection	PT100 RTDs: Motors > 500 hp. Two per phase, separately brought out.	RTDs may be required on smaller motors depending on the application.
		Motor temperature switch (bi-metallic) for all motors 30 HP and larger and all VFD-driven motors	
		Terminal Box: All temperature monitoring to be wired to separate terminal box.	
3	Bearing Temperature Protection	PT100 Bearing RTDs shall be fitted for the motor if: - The driven machine (e.g. pump) is fitted with bearing protection; or - The motor is a medium voltage motor.	
4	Torque Protection	For motors driving loads prone to jamming provide electronic shear pin protection.	
5	Bearings	Ball or roller type (other than bore hole motors) lubricated with extreme pressure grease.	
6	Vibration Monitoring	Required on air blower motors or motors larger than 500 HP.	Smaller motors may require vibration monitoring. TBD on a case-by-case basis.
7	Anticondensation Heaters	Provide anti-condensation heaters on all indoor motors 100HP and larger and all outdoor motors 50HP and larger. Indoor high humidity areas should be considered on case by case basis (Example: RDT & Dewatering)	

LAST UPDATED June, 2024			
Item	**Parameter**	**Criteria**	**Notes**
8	Efficiency	Low voltage motors shall be NEMA Premium Efficiency Motors.	
9	Voltage	Motors ≥ 500 hp: 4160 V, 3 phase, where possible.	Variations to these guidelines may be required depending on availability of voltages.
		7.5 hp ≤ Motors < 500 hp: 480 V, 3 phase, where possible.	
		Motors < 7.5 hp: 480 V, 208 V, 120 V, single phase or three phase as necessary.	
10	Service Factor	1.15.	
11	Insulation	Class F insulation on a Class B temperature rise.	
12	Variable Frequency Drive	Speed Range: Operate within the speed range required without over-heating.	
		Windings: Inverter-rated insulation for all VFD driven motors.	
		Bearings: All VFD driven motors ≥ 25hp shall be equipped with shaft grounding rings and insulated outboard bearing.	
		Package Bid: For large medium voltage drives and motors the specification shall be for a package including both the drive and motor and shall including works testing of the package (string testing).	
13	Locked Rotor Current	Locked rotor kVA per horsepower shall not exceed Code Letter G (5.6 to 6.29 kVA/hp) for all motors.	
14	Torque	Designer shall ensure motor specification covers all torque requirements suitable for driving the specified load.	

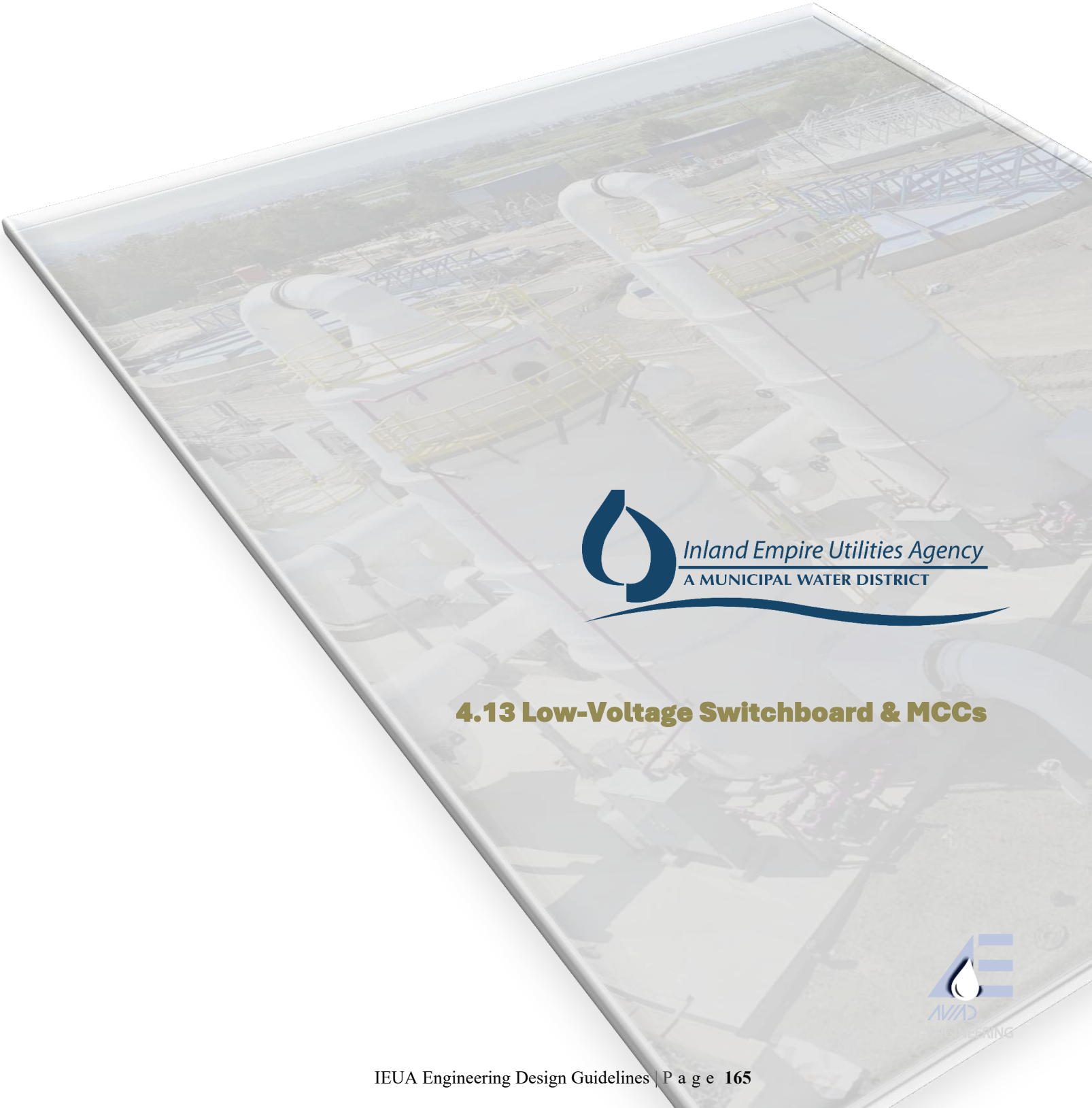

Inland Empire Utilities Agency
A MUNICIPAL WATER DISTRICT

4.13 Low-Voltage Switchboard & MCCs

4.13 Low-Voltage Switchboard and MCCs

LAST UPDATED			June, 2024
Item	**Parameter**	**Criteria**	**Notes**
0	Scope	This document covers Low-Voltage Main and Distribution Switchboards and Motor Control Centers (MCCs) design requirements.	
1	Manufacturers	Consider the following: Switchgear: Rockwell Automation Allen Bradley, Cutler-Hammer, SquareD MCCs: Rockwell Automation Allen-Bradley (preferred), may also consider Eaton, SquareD	Standard AOI library with intelligent MCCs
2	Bus -Material	Wastewater Pumping, Treatment Plants: Tin plated copper bus bars. Other: copper.	Applies for ground and neutral bus as well.
3	Bus - Ground	Extend the full length of the switchboard.	
4	Bus - Insulation	Fully insulated bus bars.	
5	Segregation	All devices shall be individually mounted and compartmented.	
6	Connections	Bolted connections accessible from the front for maintenance.	Rear access is generally not required or provided. Back-to-back switchboards shall only be provided with approval.
7	Utility Metering	- All new MCCs and critical large loads shall have power metering including KW, KWH, volts, amps, and var. - Power metering shall use SEL or AB PM 5000. - All Breaker and Switchgears shall use SEL protective relays.	
8	Arrangement	Switchboard shall generally be arranged such that the incoming section is on the left and loads are on the right. Incoming section should not be on the right unless approved.	

LAST UPDATED June, 2024			
Item	**Parameter**	**Criteria**	**Notes**
9	Future	Fully equip spaces for future devices with bussing and bus connections, insulated and braced for short circuit currents. Furnish continuous current rating.	
10	Spare Space	20% spare space shall be allowed.	
11	Circuit Protection	All feeder protection and motor starters shall utilize circuit breakers as the disconnect means. Circuits shall not be solely protected by fuses.	
12	Circuit Breaker Overcurrent Protection	Circuit breaker protection coordination: Coordinate upstream protection and downstream protection and loads. Designer shall provide evidence of time-current protection grading.	Provide meter at each Power Center main breaker and MCC main breaker and connect to plant-wide SCADA. Obtain power data from large individual motors directly from VFDs.
		Motor protection circuit breakers: Magnetic only is acceptable, with the motor overload protection and contactor providing the long-time overcurrent protection.	
		Circuit breakers with frame sizes ≥ 250 A: Shall have adjustable trip units.	
		Circuit breakers with frame sizes ≥ 800 A: Shall be provided with electronic trip units, with adjustable long time, short time and continuous current pickup and adjustable time delays.	
		Circuit breakers with frame sizes greater than or equal to 1200 A shall include at minimum energy-reducing maintenance switch with local status indicator.	
		Ethernet communication: Use E300 OL modules with power monitoring capabilities.	

LAST UPDATED June, 2024			
Item	**Parameter**	**Criteria**	**Notes**
13	Circuit Breaker Ground Fault	Ground fault protection shall be provided on main circuit breakers ≥ 800 A or where appropriate.	
14	Monitoring - Main Incoming Section	Power monitoring: Shall be provided on all incoming sections for switchboards >100 A. Allen Bradley power monitor 1426-M8-E 5000 series with Ethernet and optional Local IOT display #1426-DM when used for monitoring "Main Incoming Sections."	
		Measured Variables: Per-phase kW, KVA, kVAr, Amperes and Power Factor. Power monitor shall also provide total harmonic distortion.	
		Harmonics: For switchboards with large variable speed drive loads the power monitor shall provide individual harmonics up to the 50th harmonic.	
		Communications: Power monitor connected to SCADA system via Ethernet.	
15	Monitoring & Protection - Motor Starters	Eliminate separate analog meters and obtain data from power data from VFD. E300 w/ VIC on small non VFD motors > 5HP. Power Monitor on whole MCC.	If power information is available in SCADA (from VFD or smart overload), analog volt and amp meters are not required
		Power monitoring: For motors ≥ 150 hp with Ethernet .	
		Harmonics: For variable speed drive motors power monitor shall include harmonic distortion metering. This may be provided on the drive itself.	
		Intelligent motor starters: This functionality should be investigated on larger (treatment plant) projects.	

LAST UPDATED June, 2024			
Item	**Parameter**	**Criteria**	**Notes**
		Overload Relays: Consider the use of E300 Overload Module (or equivalent) provided with power monitoring capabilities and Ethernet communications. Protection Features: Overload, phase loss, ground fault, current/voltage imbalance, jam, over/undervoltage, over/under power. Diagnostic Features: %FL Amps, %Thermal capacity utilization, Voltage, Power, Energy.	
16	Networked Starters	Requirement: Networked Starters are preferred to be hard-wired starters in most applications. Communications: Ethernet IP networked monitoring and control; Voltage/current/power monitoring	Confirm requirement during design.
17	Motor Controls	Hand/Off/Auto: On the MCC. In 'Hand' the drive is controlled by start/stop pushbuttons on the MCC. Start/Stop push buttons shall also be provided for Local/Hand operation. In Auto the drive is controlled via SCADA. Both Hand and Auto signals should be provided as inputs to the PLC. Mounted on MCC Bucket: 1. HAND-OFF-REMOTE switch, label black 2. START pushbutton, button- black, label black 3. STOP pushbutton, button- red, label red 4. RUNNING light, red, label black 5. FAILED/ FAULTS light, amber, label black 6. RESET pushbutton, button- black, label black VFDs: add the following items. 1. VFD FAIL light, amber, label black	No remote stop/start station in the field adjacent to the pumps. Designer to advise IEUA if they wish to pursue this option in a particular situation that may warrant it. Local disconnect switch not required. Local E-stop pushbutton shall be lockable.

		LAST UPDATED	June, 2024
Item	**Parameter**	**Criteria**	**Notes**
		2. VFD RUNNING light, light red, label black Local at Equipment: 1. E-STOP only, lockable	
		Twist-to-release, lockable, emergency stop pushbutton: Located in the field at the actual driven load. This will open circuit the drive no matter whether the load is in Local or Auto.	
		Control circuit voltage: 120 VAC.	
		Variable speed drive speed reference: Controlled at the drive when in local mode.	
18	Primary Control Signals	All MCCs must have primary control signals hardwired to I/O of the controller. Additional status and diagnostic data will be transmitted over ethernet. Motor Primary Control Signals a) Hand Status b) Auto Status c) Run Command d) Run Feedback	Please note that all I/O needs to be wetted from the MCC.
19	Hardwired Shut-Downs	Hardwired shutdowns may vary depending on application. Not every item below will apply and there may be additional items not listed. Below are some examples of signals which will terminate at the local overload and read over ethernet. These signals are hardwired to shut down the pump/motor: 1) Motor Over Temperature Alarm Motor Failure	Hardwired Shut-Downs with Status to SCADA over Ethernet Note that all motor protection alarms and emergency stops will be hardwired to shut down the motor, which will continue to protect the motor in the event of a loss of ethernet connection or failure of the controller.

LAST UPDATED June, 2024			
Item	**Parameter**	**Criteria**	**Notes**
		2) Motor Overload 3) E-stop 4) High Discharge Pressure 5) Low Suction Pressure 6) Backflow	These alarms, hardwired to shut down the motor, are not capable of being bypassed from SCADA.
20	Remote Commands from SCADA over Ethernet	1) Remote Reset	
21	Monitoring Signals over Ethernet	1) Power Monitoring a) kW b) kWh c) Volts d) Amps e) Volt-amp reactive 2) MCC Ethernet Switch Power Supply Failure	Monitoring signals may vary depending on application. Not every item listed will apply and there may be additional items not listed.
22	Requirement for Ethernet for MCCs	1) There must be at least 2 Stratix Ethernet switches within an MCC, with the ability to receive power from two power supplies. 2) There must be at least 2 power supplies in each MCC, with both power supplies feeding both Stratix Ethernet switches. 3) The Ethernet switches at the MCCs must be part of a DLR network. 4) Ethernet for all MCCs should be routed and designed in a way to minimize single points of failure. For equipment that has redundancy, a) e.g. multiple influent pumps, there should be at least 2 RedBoxes to minimize the possibility of all influent pumps failing at once b) Another example is that if we had 4 fine screens in an MCC that has 2 ethernet switches, they should be arranged such that 2 fine screens are	

LAST UPDATED June, 2024			
Item	**Parameter**	**Criteria**	**Notes**
		connected to each ethernet switch. c) This same concept should be applied when designing the I/O layout for all pumps/motors. The contractor needs to be able to present/demonstrate to IEUA how they minimized single points of failure in the design.	
23	Additional SCADA Alarms	1) Communication alarm for any loss of communication with any device 2) Power failure alarm for loss of any power supply to a Stratix ethernet switch.	

Inland Empire Utilities Agency
A MUNICIPAL WATER DISTRICT

4.14 Generators

4.14 Generators

		LAST UPDATED	June, 2024
Item	**Parameter**	**Criteria**	**Notes**
0	Scope	This document covers Generator Set design requirements.	
1	Manufacturers	Cummins, Caterpillar, MTU, Kohler.	
2	Protection	Engine shutdown on high water temperature, low oil pressure, overspeed, and engine overcrank. Limits as selected by manufacturer.	
3	Controls	Local control panel with MANUAL-OFF-REMOTE selector switch on engine-generator control panel.	
4	Accessories	Fuel pressure gage, water temperature gage, lube oil pressure gage on engine/generator control panel.	
5	Enclosure	NEMA MG1, Open, Drip Proof.	
6	Fuel Storage	Mount on skid base with integral fuel storage for 8 hours full load operation.	May require additional time depending on application.
7	Alternator	Line to Neutral Voltage THD: <= 5 % .	
		Line to Neutral Individual Harmonic THvD: <= 3%.	
		3rd Harmonics: practically zero.	
		Subtransient Reactance: <=12%.	
8	Voltage Regulator	Volts /Hertz exciter-regulator: To match engine and generator characteristics.	
		Voltage regulation: plus or minus 1 percent from no load to full load.	
		Manual controls: Ability to adjust voltage droop, voltage level (plus or minus 5 percent) and voltage gain via control panel.	

		LAST UPDATED	June, 2024
Item	**Parameter**	**Criteria**	**Notes**
9	Governor	Electronic governor to maintain engine speed within 0.5 percent, steady state, and 5 percent, no load to full load, with recovery to steady state within 2 seconds following sudden load changes. Equip governor with means for manual operation and adjustment.	
10	Load Bank	Required for standby generator sets where the full load is not available for regular maintenance testing or start-up services.	If load banks are to be hired for testing instead of permanently installed, design shall include suitable facility for connecting temporary load bank.
11	Communications & Signals	Communications: Ethernet.Acceptable protocols: Industrial IP, Modbus TCP	
		Hard-wired signals (form c, dry contacts): Fault, Running, Available (Remote & not faulted), Battery Low.	

		LAST UPDATED	June, 2024
Item	**Parameter**	**Criteria**	**Notes**
12	Local Alarm and Status Monitoring	- low oil pressure (alarm & shutdown). - oil pressure sender failure (alarm). - low coolant temperature (alarm). - high coolant temperature (alarm & shutdown). - engine temperature sender failure (alarm). - low coolant level (alarm or shutdown selectable). - fail to crank (shutdown). - fail to start/overcrank (shutdown). - overspeed (shutdown). - low/high DC voltage (alarms). - weak battery (alarm). - low fuel daytank (alarm). - low/high AC voltage (shutdowns). - under frequency (shutdown). - over current (alarm & shutdown). - short circuit (shutdown). - ground fault (alarm). - over load (alarm). - emergency stop (shutdown). - engine oil pressure (psi or kPA) - engine coolant temperature (degrees F or C) - engine oil temperature (degrees F or C) - engine speed (rpm) - number of hours of operation (hours) - number of start attempts - battery voltage (DC volts)	Local alarms and all available information over ethernet interface.
13	Temporary Generators	1. In instances where temporary generator is replacing utility power for the work, the generator system shall have 100% redundancy (1 duty and 1 standby). 2. Generators shall be tested onsite with plant load for 24 hours prior to the removal of utility connection.	Twin engine generators (two in one box) are not acceptable. Demands need to be coordinated with the vendor to verify the starting hp capabilities of existing equipment

		LAST UPDATED	June, 2024
Item	**Parameter**	**Criteria**	**Notes**
		3. Design engineer shall have the temporary system on its own drawings, do not intermix with new designs. 4. Design engineer shall, after initial design, verify plant loads and measure actual inrush current for each system when starting largest load with other systems running and a load study to size the generator system.	(i.e., equipment motor hps and how they start [VFD, soft start, across line etc.]) to allow generators to start large motor loads.

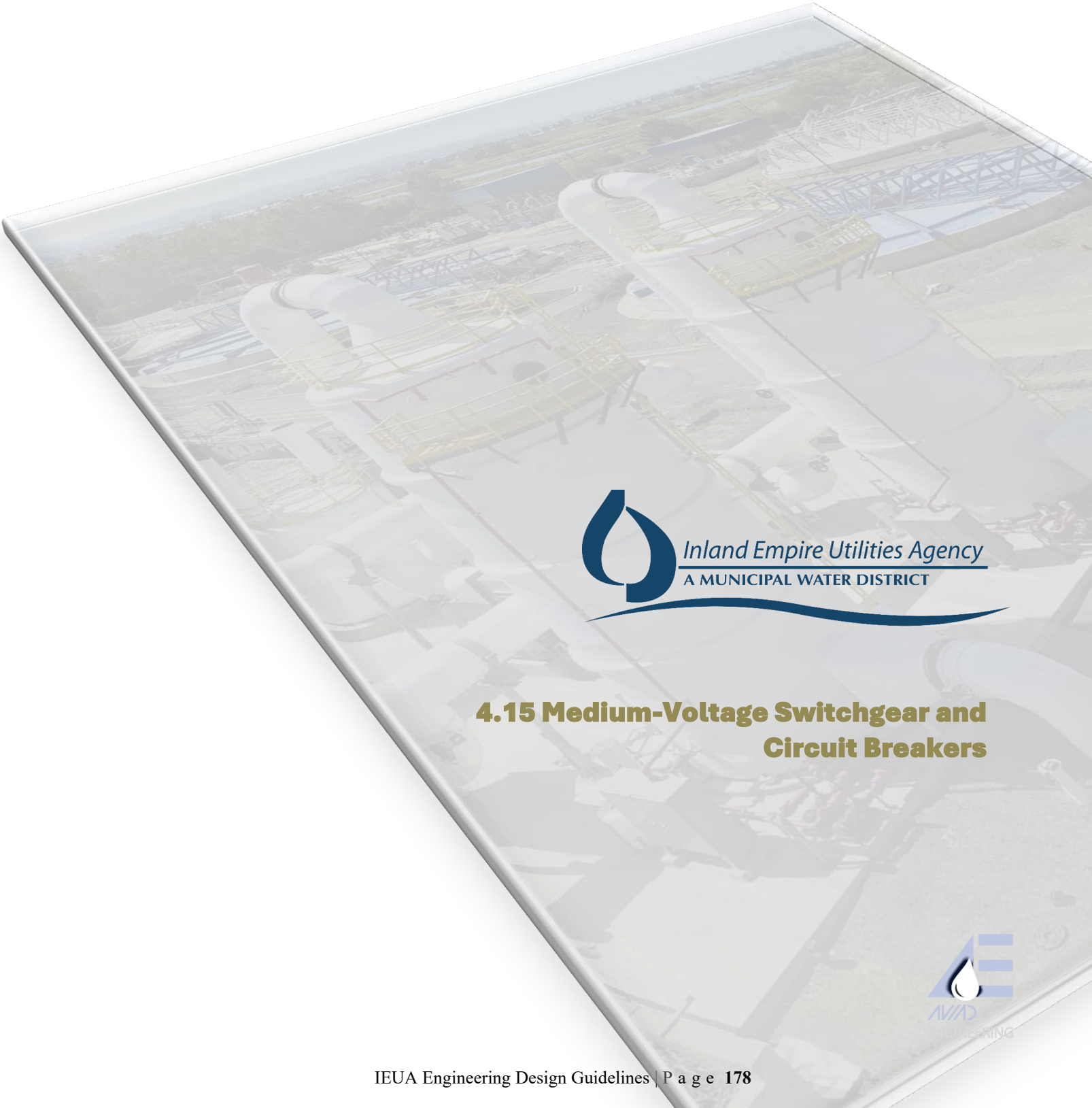

Inland Empire Utilities Agency
A MUNICIPAL WATER DISTRICT

4.15 Medium-Voltage Switchgear and Circuit Breakers

4.15 Medium-Voltage Switchgear and Circuit Breakers

LAST UPDATED			June, 2024
Item	**Parameter**	**Criteria**	**Notes**
0	Scope	This document covers Medium-Voltage Switchgear, MCCs and circuit breaker design requirements.	
1	Manufacturers	- ABB. - SIEMENS. - Square D Company / Schneider Electric. - Eaton / Cutler Hammer. - Or equal	
2	Protection	Main Incoming Power supply: Circuit breaker with overcurrent and ground fault relay. SEL-751 or similar.	Fused switch units may be used instead of power circuit breakers for feeders where space or other project constraints make this a more suitable solution.
		Main distribution feeders: circuit breakers with overcurrent and ground fault relay. SEL-751 or similar.	
		Motor Starters: Fused contactor with multifunction solid state protective relay such as Multiline Model 469+ or equal. Protection function shall include the following ANSI function as a minimum: 51LR, 49, 46, 50GS and 27. Metering shall include amps, volts, KVA, KWH, power factor % and a communication port.	
3	Utility Metering	- Power metering shall be provided for all medium voltage switchgears. - Power metering shall include KW, KWH, volts, amps, and var. - Power metering shall use SEL or AB PM 5000. - All Breaker and Switchgears shall use SEL protective relays.	
4	Motor Starter	NEMA Class: E2.	
		Type: Draw out type.	
		Fuses: Current-limiting, anti-single phase trip bar bolted power fuses.	
		Contactors: Magnetic air or vacuum-break mechanically-latched contactors.	

LAST UPDATED June, 2024			
Item	**Parameter**	**Criteria**	**Notes**
5	Motor Starter Test Circuit	To permit the checking of controller control circuit and pilot circuits with the high voltage deenergized and isolated. Locate in low voltage compartment.	
6	Motor Controls	Local/Off/Auto: On the MCC. In Local the drive is controlled by start/stop pushbuttons on the MCC. In Auto the drive is controlled via SCADA.	No remote stop/start station in the field adjacent to the pumps. Designer to advise IEUA if they wish to pursue this option in a particular situation that may warrant it.
		A twist-to-release, lockable, emergency stop pushbutton: Located in the field at the actual driven load. This will open circuit the drive no matter whether the load is in Local or Auto.	
		Control circuit voltage: 120 VAC.	
		Variable speed drive speed reference: Controlled a the drive when in local mode.	
7	Circuit breaker control voltage	125 VDC or 120/240VAC on smaller systems.	
8	Communications	Provide Ethernet CIP communications for circuit breaker status, power monitoring and motor controls, status and diagnostics.	
9	Low Voltage Transformers	Control Power Transformer (CPT): 120/240 V secondary. Primary and secondary current limiting fuses.	
		Potential Current Transformer (PT): 120 V secondary for monitoring voltage/power at relays. Primary and Secondary current limiting fuses.	
		Current Transformers: 5 Amp secondary. Accuracies shall be in accordance with ANSI standards for the metering and relay applications indicated. Provide with shorting blocks for secondary.	

LAST UPDATED June, 2024			
Item	**Parameter**	**Criteria**	**Notes**
		Fusing: The primary and the secondary of the control power transformer shall be protected by current limiting fuses.	
		Installation: Separate compartment. Separate CT, PT, CPT shall be installed for each controller or feeder protection relay.	
10	Cable Entry	Bottom.	where possible
11	Space Heaters	120VAC space heaters required.	
12	Bus	Phase: Insulated bus bars.	
		Ground: Run the entire length.	
13	Layout	Prefer controls and relays in upper compartments and Circuit Breakers in lower compartments only.	Alternate arrangement may be considered where space is limited or available only at a high cost.

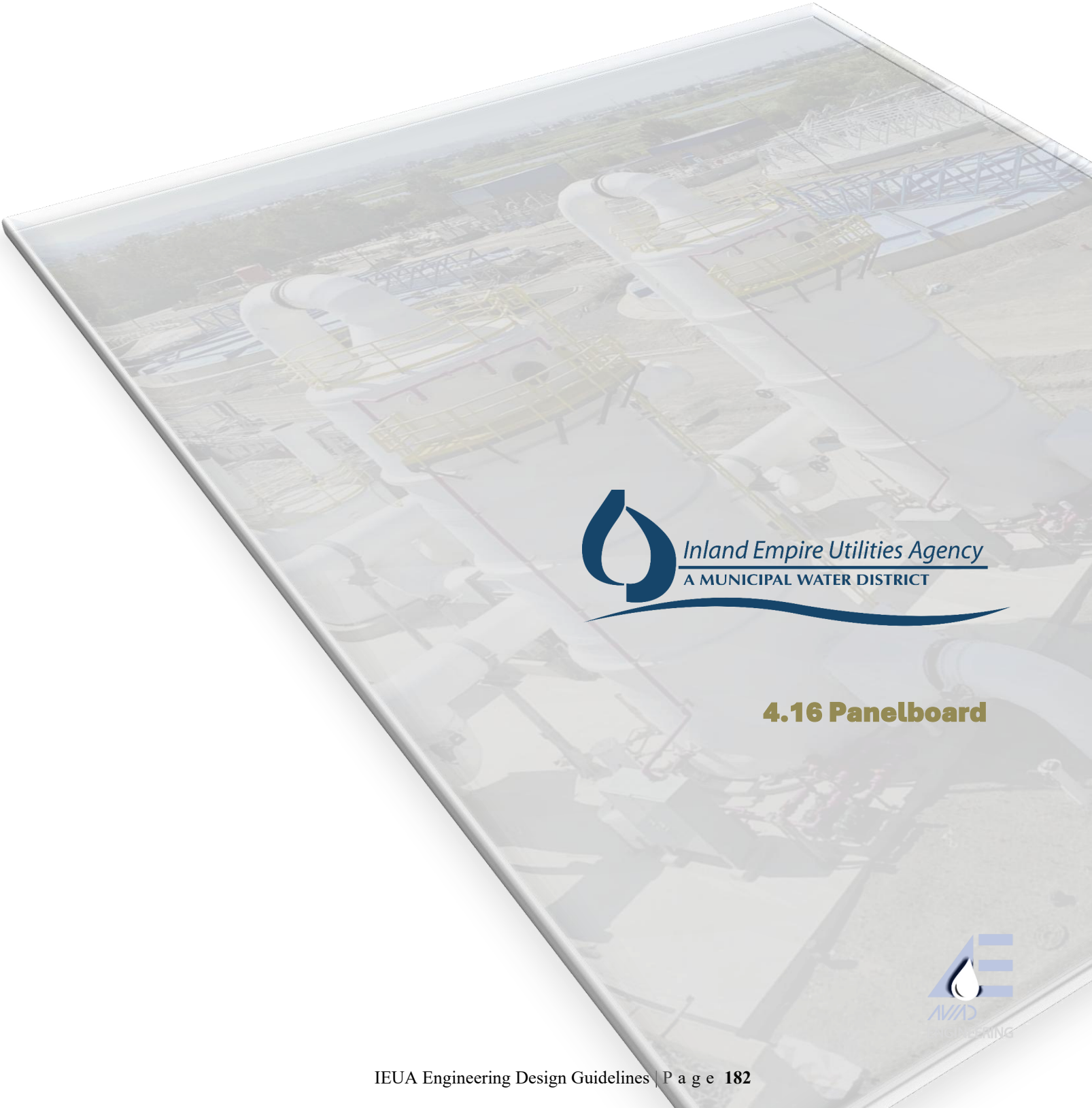

Inland Empire Utilities Agency
A MUNICIPAL WATER DISTRICT

4.16 Panelboard

4.16 Panelboard

		LAST UPDATED	June, 2024
Item	**Parameter**	**Criteria**	**Notes**
0	Scope	This document outlines the requirements for panelboards installed standalone or internal to MCCs or Switchboards.	
1	Manufacturers	Bryant, Cutler-Hammer, General Electric, Gould I-T-E, Square D, Westinghouse.	
2	Short Circuit Rating	Fully rated short circuit current equipment rating. Series connected equipment ratings are not acceptable.	
3	Temperature Rating	Panelboards and circuit breakers suitable for use with 75 degC wire at full NEC 75 degC ampacity.	
4	Voltage	120/240 VAC split phase is not preferred for power distribution panel.	
5	Circuit Breakers	Type: Thermal magnetic, moulded, bolt-on, quick-make, quick-break.	
		Multi-pole: Required for multi-phase applications.	
		Standards: NEMA AB 1.	
		Handle Padlocking: Designer to confirm where handle padlocking provisions are required.	
		GFI circuit breakers: Include conventional thermal magnetic trip and ground fault sensor, rated to trip the circuit breaker in approximately 0.025 second for a 5 mA ground fault (UL Class A sensitivity).	
		Ground fault sensor rating: To match circuit breaker rating.	
		Ground fault sensor: Push-to-test button.	
6	Enclosure Rating	Outdoor: NEMA 4X.	Confirm any additional project-specific requirements.
		Indoor Wet or Corrosive Area: NEMA 4X	
		Indoor Dry Process or Switch room Area: NEMA 12.	

		LAST UPDATED	June, 2024
Item	**Parameter**	**Criteria**	**Notes**
7	Enclosure Material & Finish	NEMA 12: Steel, Polyester Powder Coat, Grey RAL 7035.	Designer shall consider project-specific additional requirements. Areas where SS 316 is not appropriate (e.g. areas with chlorine mist) consider FRP.
		NEMA 4X: 14 gauge 316 Stainless Steel, Brushed Finish.	
		Requirement: Free of sharp edges, metal continuously welded and ground smooth.	
8	Spare	Space: Provide 20% spare space with pole fillers installed on inner door.	
		Circuit Breakers: Provide three spare 20 Amp single phase circuit breakers for 120/208 VAC panel boards.	
9	Bus Bars	Plating: Tin.	
		Size: Full sized throughout length of the panel.	
		Neutral: Insulated bus rated for phase current. 1 terminal screw / circuit.	
		Ground: Copper bus on panel board frame and bonded to the box. 1 terminal screw per circuit.	

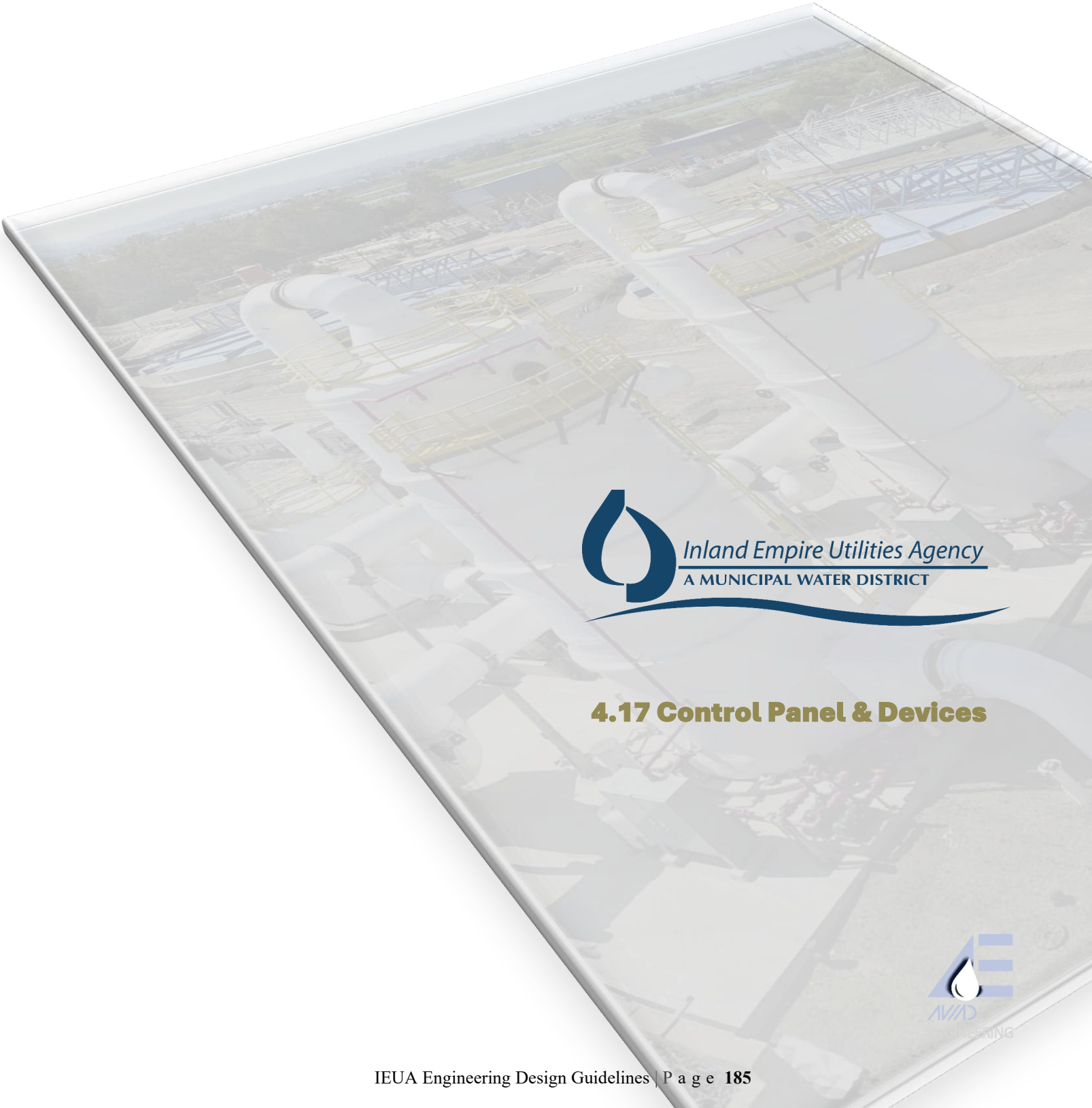

Inland Empire Utilities Agency
A MUNICIPAL WATER DISTRICT

4.17 Control Panel & Devices

4.17 Control Panel & Devices

LAST UPDATED			June, 2024
Item	**Parameter**	**Criteria**	**Notes**
0	Scope	This document applies to all control panel hardware, excluding instrumentation, radio equipment, programmable logic controllers and I/O equipment, communication equipment and human-machine-interface panels, details of which are provided in separate guidelines.	
1	Control Panel Approved Manufacturers	Manufacturer: Hoffman, Hammond or B-Line. Control panels shall not have any top penetrations.	
2	Enclosure Rating	Outdoor: NEMA 4X .	Confirm any additional project-specific requirements.
		Indoor Wet or Corrosive Area: NEMA 4X.	
		Indoor Dry Process or Switchroom Area: NEMA 12.	
		Indoor: NEMA 4 if AC is required.	
3	Enclosure Material & Finish	NEMA 12: Steel, Polyester Powder Coat, Grey RAL 7035.	Designer shall consider project-specific additional requirements. For example areas where Stainless Steel is not appropriate (e.g. areas with chlorine mist) consider FRP.
		NEMA 4X: 14 gauge 316 Stainless Steel, Brushed Finish.	
		General: Free of sharp edges, metal shall be continuously welded and ground smooth.	
4	Enclosure Lifting	Heavy duty removable lifting angles and/or lugs for panel weight > 150 lbs.	
5	Listing	UL 508A, UL 698A in hazardous environments or where IS barriers are required. UL sticker need to be attached to the control panel prior to shipment	
6	Mounting	General: Channel or raised equipment pad if floor mounted.	

LAST UPDATED June, 2024			
Item	**Parameter**	**Criteria**	**Notes**
		Vibration: Do not mount on equipment skid/pad that is subject to vibration.	
7	Heating and Cooling	Heat loading report with requirement for 20% buffer to allow for future expansion. All outdoor control panels with PLCs must include air conditioning. Control Panel AC shall be designed for a max internal temperature of 85 degrees Fahrenheit Fan-forced ventilation is not acceptable.	Designer shall consider air conditioning instead of fan-forced ventilation in areas with dust or corrosive elements in the air. Incorporate air flow considerations within the panel (re: fans on the doors).
		Fans: Fans shall be on the side of panels, not on the front.	
		Louvers: Rated to match NEMA rating and cabinet material.	
		Shade: - Sunshield heat sink assembly or approved shade structure for cabinets in direct sunlight. - Operator Interface on outdoor panels must be protected from sunlight. - Sun shades provided to off-set air conditioning must provide 80% coverage from direct sunlight throughout the day	
		Insulation: - Outdoor control panels shall include insulation with a minimum rating of R2. - Thermal blanket wraps for control panels are not permitted	
		Panel-Mount A/C: Hoffman/Pentair or ICE Qube c/w Ethernet comms and environmental protective coating on coils.	

LAST UPDATED June, 2024			
Item	**Parameter**	**Criteria**	**Notes**
8	Panel Lighting	- Internal panel lighting shall use LED technology and motion sensing for control	
		Switching: Door operated switch.	
9	Wiring Colors	Line and Load circuits AC or DC Power: Black.	
		AC Control circuits: Red.	
		DC Control circuits: Blue.	
		Interlock Ctrl Circuits on the Panel Energized from Ext. Source: Yellow.	
		DC Signal Grounding: Green / White Stripe.	
		Equipment Grounding: Green.	
		Current Carrying Grounded Conductor (Neutral): White.	
		Intrinsically Safe: Blue.	
10	Minimum Physical Separation	Communications circuits: 1”.	Applies to terminal blocks, circuit breakers and other equipment where conductors are terminated.
		< 50 V line to ground: 1” (discrete I/O, analog, digital, etc.).	
		50 V to 120 V line to ground: 3” (discrete I/O, power distribution, etc.).	
		Greater than 120 V line to ground: 6” (power distribution, etc.).	
11	Plastic Raceway	Manufacturer: Panduit.	
		Location: Interior dry locations.	
		Installation: Screwed to back panel.	
		Raceway Fill: Fill ratio not to exceed 40% of interior cross section.	
12	Conductor Installation	Secure/Support: Using nylon tie wraps / supports attached with epoxy based adhesive.	Include general requirements for a neat and tidy wiring installation, including ease of access to equipment, layout requirements, duct fill, removal of excess wire,
		Hinged wiring loop: Use for transitions from fixed face to hinged component. Secure at each end. Protect bend with sleeve using nylon sock material. Spiral wrap not acceptable.	

LAST UPDATED June, 2024			
Item	**Parameter**	**Criteria**	**Notes**
		Terminations: Wires installed in a compression screw and clamp, max of one for field wires entering enclosure, otherwise maximum of two.	smooth bends and abrasion protection etc.
		Splicing / tapping: To be at device terminals or terminal blocks.	
		Field Wiring: Terminate all field wiring on terminals or circuit breaker.	
13	Emergency Stop	Manufacturer: Allen Bradley or Square D.	
		Type: Mushroom, push to operate, maintained and twist release type.	
		Guard: Round aluminum operator guard installed for critical process control equipment or areas likely to incur incidental contact.	
		Label: Circular, white letters, red background, indicates "Emergency Stop".	
14	Analog Signal Isolators	Manufacturer: Allen Bradley, Phoenix Contact.	Analog instruments located in different control panels shall not be wired in series. Analog signal isolators shall be used.
15	Status and Alarm Indicating Lights	Manufacturer: Allen Bradley or Square D.	
		Type: Push-to-test, panel-powered, cluster type Light Emitting Diode (LED).	
		LED Color: 1. Red: Energized - e.g. Motor Running, Valve Open, CB Closed, O/L Relay Energized. 2. Green: De-Energized - e.g. Motor Stopped, Valve Closed, CB Open. 3. Amber: Control in "Auto" Mode. 4. Blue: Control in "Remote" Mode. 5. White: Power On.	

LAST UPDATED June, 2024			
Item	**Parameter**	**Criteria**	**Notes**
16	Enclosure Doors	Door Latch: Control Panel Doors must be able to open to 180 degrees. Provide mechanism to maintain door open at 90 degrees and 180 degrees.	
		Outdoor/Wet Areas: Provide inner dead front door panel. Door mounted devices to be on inner door. Inner door hinged with knurled finger operable captive screws.	
		Document Pouch: Metal protective pouch to hold wiring diagrams and process information.	
		Door gasket: Attach with oil resistant adhesive.	
		Handle: Quarter turn 3 point single handle with lock hasp.	
		Equipment Mounting Panel: Mount equipment on interior metal panel, finished with white enamel.	
		Intrusion Detection: Switches wired to Programmable Automation Controller.	Not required for RIO panels. Separate security provided for buildings.
		Grounding stud: Provide on door and body.	
17	Selector Switches and Push Button Switches	Manufacturer: Allen Bradley or Square D.	
		Type: listed as heavy-duty and oil tight by manufacturer.	
		Contacts: Minimum (1) NO and (1) NC contact for each.	
		Label: Black letters on white background. Indicate control mode or function.	
18	Terminal Blocks	Manufacturer: Phoenix Contact, Allen Bradley.	
		Label: Group label describing each terminal block group.	

LAST UPDATED June, 2024			
Item	**Parameter**	**Criteria**	**Notes**
		Fused and Non-Fused Modular Terminal Blocks: - Screw type modular connector assemblies. - No exposed conductive terminals. - DIN rail mounting secured to enclosure back panel.	
		Terminal Ground Bus: - Ground bus terminal blocks, with each connector bonded to enclosure through terminal strip din rail, for control power grounding. - Minimum 25 % spare terminal blocks.	
		Fused Type Terminal Blocks: - Minimum 15-Amp rated. - Feed through type with side terminating terminals. - Latch in open position. - Externally accessible testing terminals.	
		Non-Fused Type Terminal Blocks: - Minimum 10-Amp rated. - Feed through type with side terminating terminals. - Externally accessible testing terminals.	
19	Receptacles	Provide a UPS and a non-UPS receptacle in each panel. Leviton or similar.	
20	General Purpose Plug-in Relay	Manufacturer: Allen Bradley, Square D, IDEC, RJ Blade Series.	
		Product Description: DIN rail mount, sealed relay with base and retainer and LED indicator.	
		Surge Suppression: Diode.	
		Contact Ratings: Minimum 10 amperes continuous.	
21		Manufacturer: Warrick, Series 27.	

LAST UPDATED June, 2024			
Item	**Parameter**	**Criteria**	**Notes**
	Intrinsically Safe Control Relay	Product Description: Panel mounted, sealed optically isolated relay for use in class I and class II listed areas.	
		Contact Ratings: Minimum 8 amperes continuous.	
		Listing: UL 913.	
		Exposed conductive terminals shall be covered with plexiglass or mounted inside a wide wireway with cover and clearly labeled.	
22	Solid State Relay	Manufacturer: IDEC, RSSAN Series, Phoenix Contact or approved equal.	
		Product Description: Panel Mount, Solid-state electronic relay with optically isolated output (Non-Intrinsically Safe Control Relay).	
		Contact Ratings: 10 through 90 amperes continuous, as required.	
		Enclosure: Hermetically sealed, suitable for Class 1, Division 1 & 2 installations.	
23	Time Delay Relay	Manufacturer: IDEC, GT5 Series or approved equal.	
		Product Description: Din rail mount solid-state with base and retainer.	
		Surge Suppression: Diode.	
		Contact Ratings: Minimum 10 amperes continuous.	
		Socket: To match relay and meet conditions of installation.	
24	Limit Switch	Manufacturer: Allen Bradley or Square D.	
		Product Description: Heavy-duty, lever-operated limit switch.	
		Contact Ratings: Minimum 10 amperes continuous.	
		Enclosure: NEMA 6P.	

LAST UPDATED June, 2024			
Item	**Parameter**	**Criteria**	**Notes**
25	Electrical Transient Protection - Control Panel ≥ 100 Amp service	Manufacturer: Square D, XW Series, Phoenix Contact.	
		Product Description: Panel mount Transient Voltage Surge Suppressor.	
		Listing: UL 1449.	
		Indication: LED status indicator.	
		Surge Capacity: 100,000 amps per phase.	
26	Panel Orientation	Orientation shall be North unless otherwise approved.	
27	Electrical Transient Protection - Control Panel < 100 Amp service	Manufacturer: Square D, Multi 9 SPD Series, Phoenix Contact.	
		Product Description: DIN rail mount Transient Voltage Surge Suppressor.	
		Listing: UL 1449.	
		Indication: LED status indicator.	
		Surge Capacity: 45,000 amps per phase.	
28	Circuit Breakers	Manufacturer: Allen Bradley, Square D Or equal.	Fuses shall not be used for control panel AC power distribution.
		Type: Panel mount UL489, bolt-on thermal mag circuit breakers.	
29	Incoming Power & Distr. Blocks	Manufacturer: Allen Bradley, Square D Or equal.	
		Material: High impact thermoplastic with tin plated copper lugs.	
		Cover: Manufacturer listed finger safe cover.	
30	Incoming Power Ground Bus	Manufacturer: GE, TGK24CP, or approved equal.	Designer shall ensure specification includes requirements for bonding and grounding equipment and enclosure.
31	DC Power Supply	Manufacturer: Allen Bradley 1606.	
		Voltage: a. Primary: 120-Vac, 60-Hz. b. Secondary: 24-Vdc.	

LAST UPDATED June, 2024			
Item	**Parameter**	**Criteria**	**Notes**
		Fusing: Integral fusing with manufacturer listed finger safe covers/terminals. Primary and secondary fusing and disconnecting means for each connected control power distribution leg.	
		Separation: Min 2 inch from adjacent devices.	
		Redundancy: - Provide Redundant Power Supply	
32	Control Power Uninterruptable Power Supply (UPS)	Required for critical control panels as designated by IEUA in coordination with the consultant.	
		Manufacturer: APC	
		Model Numbers: 1.5 kVA: 3.0 kVA: 8.0 KVA: 16 kVA:	Manufacturer testing is required for units larger than 3kVA
		Maintenance Bypass Switch: 1.5 kVA: APC SBP1500RM 3.0 kVA: Eaton BPE01MBB1A 8-16 kVA: APC SBP16KP	
		Voltage: 120-Vac, 60-Hz Input, +/- 10 percent of rated input voltage.	
		Operating Temperature Range: 0°C to 50°C.	
		Protection: Data line protection.	
		Relays: Form C dry contact relay for low battery and alarm indication.	
		Communications: Network Interface card, model #AP9641, APC UPS Network Management Card 3 with Environmental Monitoring for non-air conditioned and model #AP9640, APC UPS Network Management Card 3 for air conditioned locations.	
		Starting: Cold start capability.	

LAST UPDATED June, 2024			
Item	**Parameter**	**Criteria**	**Notes**
		Terminals: Finger safe screw terminals.	
		Listing: UL 1778 recognized	
		Rating: Run time of fifteen (15) minutes with all devices active. A rating of 4 hours should be provided for critical equipment where no on-site backup generator is available.	
		Protection: circuit breaker for each control power distribution leg.	
		Wiring Diagrams: Refer attachment xx	
33	Use of Wire Ties in Control Panels	Inside control panels, wire ties shall be as follows: a. Velcro is to be used for all power cables. b. Velcro is to be used for all networking cables, including ethernet and fiber. c. Nylon Ty-rap (nylon zip ties) are acceptable for individual electrical conductors, such as control signal wiring.	
34	UPS Feed	Redundant Power Supplies Main Cabinet and Control Power with Single UPS Feed	See Drawings in Appendices

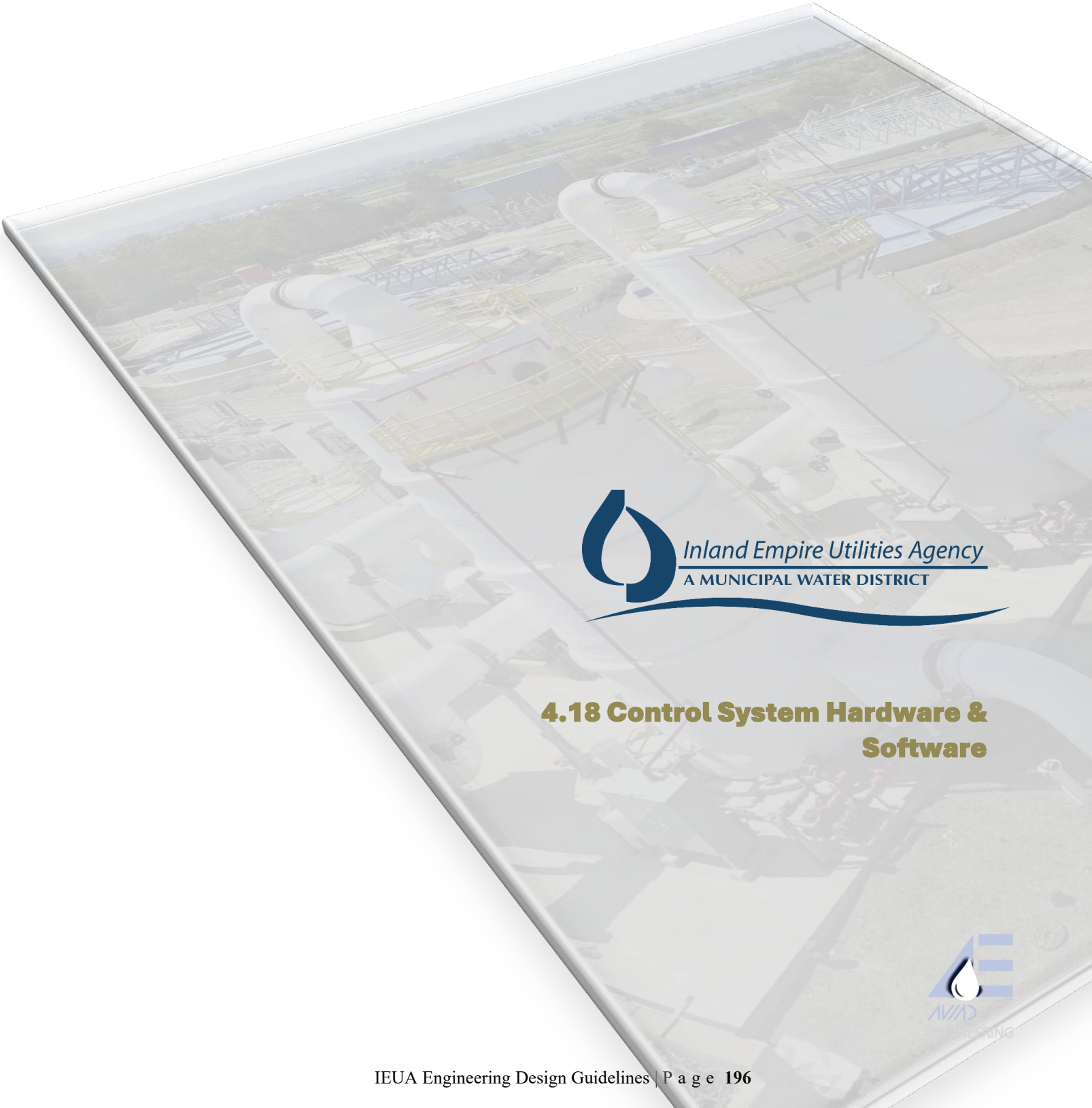

Inland Empire Utilities Agency
A MUNICIPAL WATER DISTRICT

4.18 Control System Hardware & Software

4.18 Control System Hardware & Software

LAST UPDATED			Sep 1, 2025
Item	**Parameter**	**Criteria**	**Notes**
0	Scope	This document applies to all control system hardware and software including programmable logic controllers, human-machine-interface panels and communications equipment.	
1	System Integrator	Designer shall confirm system integrator requirements for each project.	Where applicable, system integrator shall be Rockwell automation recognized system integrator. Reference IEUA MSA for selected System Integrators. Rockwell automation process certified (PlantPAx)
2	IEUA Reference Documents	SCADA Standards	See Appendix "iii" at the end of Section 4.
3	Control Narrative	The designer shall produce a control narrative that shall provide all details necessary for the programmer to complete the work.	See Appendix "i" at the end of Section 4.
4	Software	PAC Programming/Design: RSLogix and Studio 5000 Logix Designer. Plant HMI/SCADA: Rockwell Factory Talk View SE, Factory Talk SE Historian, and Thin Manager for display management at all control panels. FactoryTalk View Alarm and Events, Win-911 Alarm Notification, RACO Backup Alarm Notification, FactoryTalk AssetCentre, FactoryTalk TrendPro, AVEVA Enterprise PI System. alarm and event reports	Designer shall confirm software license requirements for each project. In general: Factory Talk View Client Licenses as follows: - 1 Thin Manager license for each client or remote workstation - 20 licenses for each new HMI server - 4 licenses for each new monitor added to a control room - 4 licenses for each new remote workstation

LAST UPDATED			Sep 1, 2025
Item	**Parameter**	**Criteria**	**Notes**
		utilizing Rockwell's recommendations/standards, and PI Reports used for process reports, energy reports, etc. Local Standalone HMI/SCADA: Factory Talk ME (Machine). Device Programming/ Config/ Integration: Connected Components Workbench. Existing Sites: Confirm whether legacy software licenses need to be updated.	1 Factory Talk AssetCentre license for each new PLC, OIT, or VFD smart motor starters (e.g. E300) added to the system. Provide a minimum 10 count asset license. Licenses for the following may also be needed, depending on the project: FT Historian, HMI server display license, FT View Studio, Logix programming license, Radio Management, Thin Manager, TrendPro, OSIsoft Tag, interface and client licenses., Win911, RACO, Operating system licenses, TS Cal licenses for terminal servers, VMWare, VEEAM, alarm and event reports utilizing Rockwell's recommendations/standards, and PI Reports used for process reports, energy reports, etc.
5	PlantPAx use	• PlantPAx control strategies (FBD) from Rockwell Process Library shall be utilized. We have seen a lot of inconsistency of how the PlantPAx objects are used. Rockwell's library PlantPAx control strategies dictates how the objects should be used. • PlantPAx 4.6 – P_AIChan with P_Ain should be used for all physical analog inputs. For	

LAST UPDATED			Sep 1, 2025
Item	**Parameter**	**Criteria**	**Notes**
		messaged data, P_AIChan is not needed. Scaling and alarming should be done in P_Ain block, with raw scaling 4-20, and appropriate EU scaling. • PlantPAx object functionality should be maintained and not set programmatically outside the object. All operator interaction with PlantPAx object should be fully functional. For example, don't create a separate alarm outside the object if it already exists in the object, do not override items that should be adjustable from the PlantPAx object. • All inputs/outputs should be tied to a PlantPAx object. • All alarms should have an associated PlantPAx object on the HMI with the alarm faceplate accessible, and appropriate alarm breadcrumbs on the navigation header Do not use alarming off Boolean. • Cfg_Desc field should be filled in with the appropriate description. • Cfg_Label should be filled in with a short description generally matching P&ID and unique (IEUA Ops to approve) • Cfg_Tag should match the tagname in P&ID/PCN • PlantPAx parameters should be used in logic, rather than mapped to a separate register to use in logic.	

LAST UPDATED			Sep 1, 2025
Item	**Parameter**	**Criteria**	**Notes**
6	Ethernet Switch	Plant/Process Control: Allen Bradley Stratix Ethernet Switches shall be used for network based Ethernet communications. Hubs shall not be accepted. At a minimum, each control panel using the Ethernet protocol shall be provided with a switch and ports equal to the devices connected. IT Systems: Cisco Switches.	See OIT PLC table at the end of Section 4.18 for plant switches.
7	Operator Interface Terminal (OIT)	- Rockewell Automation PanelView Plus 7 Performance Version - All panel mounted OITs in outdoor environments must be equipped with the following: o Sun Shade or cover that completely protects the display from direct sunlight throughout the day o A cover or shield that protects the display from UV rays o Outdoor environment rated high bright display capable of viewing in daylight. o Shield or device to prevent rainwater from entering the back of the display if the door must be opened in the rain or if water has accumulated along the door gasket.	See table at end of this section for specific OIT size.
8	Panel Mount Industrial Workstation	For field HMI clients, use thin client with industrial monitor and keyboard: - HP T370 Thin Client. - Hope Industrial Systems HIS-ML19.5-SGAA 19.5" NEMA 4X Panel Mount	Requirements to be re-visited annually (model number updated)

LAST UPDATED			Sep 1, 2025
Item	**Parameter**	**Criteria**	**Notes**
		HD1080P Industrial Monitor. - Hope Industrial KB-R3-WMT-SS4-4X-USB Stainless Steel, Full-Travel Wall Mount Keyboard with Touchpad.	
		For applications needing a fully functioning PC (this case is rare), use panel mount PC: - 17.3" NEMA 4X 1080p High Definition Panel PC Model #VTPC173PS-JB	Requirements to be re-visited annual (model number updated)
		Processor: i7-3610QE	
		RAM: 16GB	
		Hard Drive: 256 GB Solid State	
		Operating System: Windows 10	
9	PAC / PLC System	Allen Bradley Logix series of controllers.	See table at end of this section for details.
		PLC Redundancy – 2 fiber patch cables	Provide 2 fiber patch cables (each patch cable is a pair of fibers) between the PLC redundancy modules, even if not shown or called out.
		Redundant PLCs need 2 UPS feeds	Redundant PLCs should be supplied power from two independent UPS feeds.
10	Preferred ControlLogix Modules	Controller: Refer to OIT/PLC Table	Note 120 VAC I/O preferred. See OIT/PLC Table at end of Section 4.18.
		Ethernet Redundancy Module: 1756-RM2 (Enhanced).	
		Discrete Input Module: 1756-IA16I Isolated 120 VAC 16 Channel	
		Discrete Output Module (Isolated): 1756-OA16I 120 VAC 16 Channel (1 Amp max)	
		Discrete Output Module (non-isolated): 1756-OA16 120 VAC 16 Channel (0.5 Amp max). Only	

LAST UPDATED			Sep 1, 2025
Item	**Parameter**	**Criteria**	**Notes**
		used in conjunction with 1492-XIM20120-16R Relay Termination Module	
		Discrete Output Module (relay): 1756 – OW16I Isolated AC/DC 16 Channel Relay. i. 1 A @ 5…30V DC ii. 0.5 A @ 48V DC iii. 0.22 A @ 125V DC iv. 1.5A @ 120V AC 50/60 Hz v. 0.75A @ 240V AC 50/60 Hz	
		Analog Input Module: 1756-IF8IH Isolated 8 Channel, HART Enabled.	
		Analog Output Module: 1756-OF8 Non-Isolated 8 Channel	
11	Preferred CompactLogix Modules	1769L24ER- QB1B – Up to 4 expansion modules 1769L30ER- up to 8 expansion modules. Allen-Bradley 5069 series.	Note 120 VAC I/O preferred. Do not use embedded IO in the CompactLogix controller, use IO modules instead for IO.
		Use Allen Bradley CompactLogix Controller even for very small stand-alone applications.	
12	HMI/OIT	• Reference Rockwell's white paper for HMI style guidelines (this could replace 4.4 and 4.5 in High Performance HMI Standards part of Appendix "iii" at the end of Section 4.) • Additional details need to be added for: ○ Hand status (HOA not in auto) should be easily visible from the display	

LAST UPDATED			Sep 1, 2025
Item	**Parameter**	**Criteria**	**Notes**
		(without having to click on faceplate) • Alarm breadcrumbs should be displayed on all navigation buttons. Currently Section 4.3 state Level 2 and Level 3 navigation links identifying the highest alarm severity, but should apply to all navigation buttons. • Appendix E on HMI groups no longer applies for PlantPAx 4.6 and 5.0. Rockwell PlantPAx manuals should be referenced instead. • HMI commands should set a value, where the PLC would reset the value upon receipt of the command. Do not use momentary buttons for commands to the PLC. • Global objects for navigation header should be used (applies to both FT View ME and SE). • Navigation header should distinguish which button has been selected, either with a darker shade of gray, or an underline. All OIT displays and setpoints should be shown on SCADA application as well.	
13	Proprietary IO Interface Module for Control & CompactLogix	Analog IFM - 1492-AIFM8F-3. Digital IFM - 1492-IFM40DS120A-4.	Do not use embedded IO in the CompactLogix controller, use IO modules instead for IO.

LAST UPDATED			Sep 1, 2025
Item	**Parameter**	**Criteria**	**Notes**
14	Conductor Installation - Programmable Automation Controllers	IFM Modules: Use proprietary Allen Bradley IFM modules for PLC IO.	Inputs wetted from the field wherever possible.
		Analog: Positive terminal of analog (4-20 mA) signal cable to be terminated on disconnect terminals.	
		Loop Power: Terminal strip for PLC digital IO to allow inputs to be wetted from field or panel (i.e. hot terminal or volt-free terminal for each input).	
15	Communication Network	General: Ethernet (IEEE 802.3) unless otherwise specified to suit legacy equipment or specific equipment which does not support Ethernet.	Provide a SCADA workstation cabinet in each electrical room (roughly 2'x2' with front and rear access). The cabinet shall house a thin client workstation.
		Remote IO: Allen Bradley DLR or PRP over Ethernet with Parallel Redundancy.	
16	Protocol Converter	Utilize communication protocol conversion devices where required to transform and transmit device level communication protocols to a common system level protocol. Each native device I/O bit shall be accessible over the network using this common system protocol. a. Media converters shall be manufacturer listed for use in industrial environments. b. Media converters shall be din rail mounted within a listed and suitable enclosure. c. 24 VDC power supply.	

OIT / ETHERNET SWITCH / PLC/PAC SOLUTIONS							
Type of Site	**Ethernet Switch**	**PLC / PAC Solution (P processors)[1]**	**Operator Interface Terminal OIT**	**Redundant Processors**	**Redundant I/O Power supplies**	**Redundant I/O Architecture**	**Plant PAx**
Small Package equipment such as grinders and Surge Tanks	RA Stratix 5800	CompactLogix 5380	2711P series PanelView Plus 7, 10" Performance	No	No	N/A	Yes
Remote Monitoring Sites	RA Stratix 5800	CompactLogix 5380	2711P series PanelView Plus 7, 10" Performance	No	No	DLR	Yes
Recycle Water Pump Stations	RA Stratix 5800 (redundant if processor is redundant)	ControlLogix L83 or larger	2711P series PanelView Plus 7, 15" Performance	Redundant depending on application	No	DLR	Yes
Sewer and NRW Lift Stations	RA Stratix 5800 (redundant)	ControlLogix L83 or larger	2711P series PanelView Plus 7, 15" Performance	Yes	Yes	DLR	Yes
Ground Water Recharge Basin	RA Stratix 5800	CompactLogix 5380	2711P series PanelView Plus 7, 10" Performance	No	No	DLR	Yes
Recycle Water Turnout	RA Stratix 5800	CompactLogix 5380	2711P series PanelView Plus 7, 10"	No	No	DLR	Yes
De-Chlorination Station	RA Stratix 5800 (Redundant)	ControlLogix L83 or larger	2711P series PanelView Plus 7, 15" Performance	Yes	Yes	DLR	Yes
Reservoir	RA Stratix 5800	CompactLogix 5380	2711P series PanelView Plus 7, 10" Performance	No	No	DLR	No
Treatment Plant							
Distributed Control Processor (DCP)	RA Stratix 5800 (redundant)	ControlLogix L85	N/A	Yes	Yes	PRP	Yes
Remote I/O (from DCP)	RA Stratix 5800 (Redundant)	1756 ControlLogix I/O	N/A	N/A	Yes	PRP	N/A
Membrane Bio-Reactor (MBR)	RA Stratix 5800 (redundant)	ControlLogix L85	N/A	Yes	Yes	PRP	Yes
Pump Station	RA Stratix 5800 (redundant)	ControlLogix L83 or larger	2711P series PanelView Plus 7, 15" Performance	Yes	Yes	DLR	Yes
Chemical Feed	RA Stratix 5800	CompactLogix 5380	2711P series PanelView Plus 7, 10" or larger Performance	No	No	DLR	Yes
Blowers	RA Stratix 5800	CompactLogix 5380	2711P series PanelView Plus 7, 10" or larger Performance	No	No	DLR	Yes
Master Control Panels (blowers)	RA Stratix 5800	ControlLogix L83 or larger	2711P series PanelView Plus 7, 10" or larger Performance	No	No	DLR	Yes
Centrifuges	RA Stratix 5800	ControlLogix L83 or larger	2711P series PanelView Plus 7, 15" Performance	No	No	DLR	Yes
Storage Silo	RA Stratix 5800	ControlLogix L83 or larger	2711P series PanelView Plus 7, 15" Performance	No	No	DLR	Yes

Note 1: The controller chosen must be supported by Rockwell's Process System Estimator (PSE) and must be an active product in Rockwell's lifecycle status.

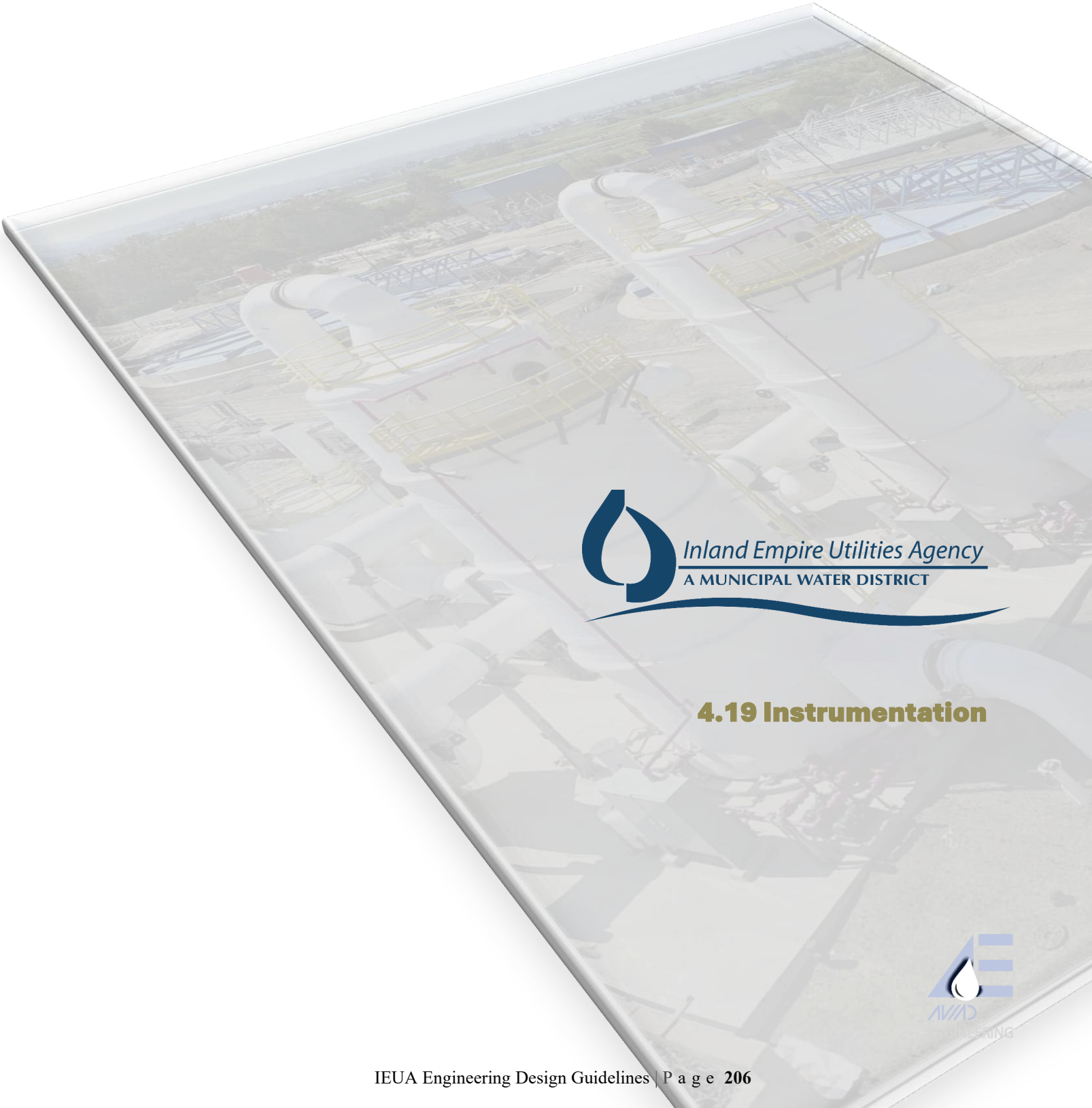

Inland Empire Utilities Agency
A MUNICIPAL WATER DISTRICT

4.19 Instrumentation

4.19 Instrumentation

		LAST UPDATED	Sep 1, 2025
Item	**Parameter**	**Criteria**	**Notes**
0	Scope	This document outlines the requirements for all instrumentation.	
1	Control System Integrator	Designer shall confirm system integrator requirements for each project.	
2	Communications	All instruments to be HART compliant except air control valves on aeration basins.	Ethernet networked instruments may be considered for suitable projects.
3	Housing	All process instruments in wet areas shall be in housed in IP68, NEMA 4 enclosures. For instrumentation exposed to sun, provide a sun shade, heat insulation or shield to protect equipment.	
4	Display	Transmitters shall have a display and, where adjustable, control functionality shall be provided locally for adjustment of signal range and process range, unless local display is unavailable.	
5	Level - Radar	Manufacturer: Siemens LR250 with fully encapsulated lens, Rosemount Or equal.	Application: Sludge blanket indicators on clarifiers. Consider where foaming may be an issue.
6	Level - Ultrasonic	Manufacturer: Siemens, Rosemount, Or equal.	Application: Non-contact level monitoring.
7	Level - Pressure	Manufacturers: Rosemount.	Application: Where non-contact level monitoring is not required and ease of access to the transmitter is desired (e.g. water tanks).
8	Level - Submersible Hydrostatic	Manufacturers: Rosemount Ceramic, Endress Hauser Or approved equal	Application: Covered basins.

		LAST UPDATED	Sep 1, 2025
Item	**Parameter**	**Criteria**	**Notes**
9	Level - Conductivity Probe	Manufacturers: Warrick.	
10	Level - Float Switch	Manufacturers: Kari, Flygt Or approved equal.	Application: Level alarm detection. Not used for primary process control applications.
11	Pressure - Absolute	Manufacturers: Rosemount, ABB, Or equal. Chemical Installation: Isolation Diaphragm Seal. Wastewater: Annular Seal. Calibration/Testing: 3-way valve manifold for calibration/testing.	Application: Pipe pressure, pump discharge/suction, general process pressure.
12	Pressure - Differential	Manufacturers: ABB, Rosemount, Or equal. Chemical Installation: Isolation Diaphragm Seal. Wastewater: Annular Seal. 3-way valve manifold for calibration/testing.	Application: Pressure drop across filters, etc.
13	Pressure - Switch	Manufacturers: Ashcroft.	
14	Flow - Electromagnetic (Full pipe)	Manufacturers: Endress Hauser, Rosemount, ABB, Or equal. - Any flow tube installed in a submerged condition or an area that could be submerged shall be IP68 rated with a potted head on the flow tube. Any flow tube installed in a vault shall have a remote mounted transmitter located above grade. The cable from the flow tube to the transmitter shall be continuous with no splices and shall have smart diagnostics to detect flow meter faults.	Application: Primary process liquid flow measurement. No ABB in outdoor applications.

		LAST UPDATED	Sep 1, 2025
Item	**Parameter**	**Criteria**	**Notes**
		Maintenance: Consider DP Flowmeter (Low Loss Venturi) as an alternative (where pressure, space, turndown and accuracy are acceptable) or provide maintenance bypass for critical applications where a bypass or standby does not exist.	
		Any flowmeter used for billing or compliance should be totalized in the flow meter, not calculated in the PLC (totalized value from meter read via HART by the controller).	
15	Flow - DP (Full Pipe)	Manufacturers: Rosemount, ABB, Or equal.	
16	Flow - Open Channel	Manufacturers: Siemens, Rosemount, Or equal.	
17	Flow – Prop	Manufacturers: McCrometer, Sparling Or equal.	
18	Flow - Thermal mass flowmeter	Manufacturers: FCI.	Application: Digesters.
19	Flow - Air	Manufacturers: FCI Insertion.	Application: Aeration.
20	Flow - Liquid Switch	Manufacturers (thermal flow switch): Dwyer, IFM, Or equal.	Application: Pump no flow, sample line no flow, etc.
21	Flow - Air Switch	Manufacturers: FCI.	Application: Ventilation/Extraction fan no flow, etc.
22	Limit - Switch	Manufacturer: Square D, Class 9007 Type C.	
23	Temperature - Transmitter	Manufacturer: Rosemount.	Application: Process temperature.
24	Temperature - Switch	Manufacturer: Ashcroft, Allen Bradley, Or equal.	
25	Vibration - Transmitter	Manufacturer (preferred and approved): Allen Bradley Dynamic 1444 series.	Application: Vibration monitoring for pump, motor, blower, etc.

		LAST UPDATED	Sep 1, 2025
Item	**Parameter**	**Criteria**	**Notes**
26	Grounding and Bonding	Provide grounding and bonding of instrumentation in accordance with manufacturer's requirements and as specified elsewhere.	
27	Process - Chlorine Analyzers	Manufacturer: ECD, Severn Trent, Or equal	
28	Process - PH Probes	Manufacturer: Hach Differential pH with SC200 controller	
29	Process - Conductivity Probes	Manufacturer: Hach Contactless, with SC200 controller	
30	Process - Turbidity Meter	Manufacturer: Hach 1720E with SC200 controller	
31	Process - Dissolve Oxygen Probes	Manufacturer: Hach LDO2 with SC200 controller	
32	Process - ORP	Manufacturer: Hach with SC200 controller	
33	Gas Detection - Oxygen	Manufacturer: MSA Ultimax	
34	Gas Detection - H2S	Manufacturer: MSA Ultimax	

		LAST UPDATED	Sep 1, 2025
Item	**Parameter**	**Criteria**	**Notes**
35	Gas Detection - LEL	Manufacturer: MSA Ultimax x IR	

Inland Empire Utilities Agency
A MUNICIPAL WATER DISTRICT

Electrical Appendices

Electrical Appendices

Inland Empire Utilities Agency
A MUNICIPAL WATER DISTRICT

Section 4-Electrical and I&C-Appendices

i Operation and Control Philosophy Sample

AVAD ENGINEERING

i Operation and Control Philosophy Sample

PROCESS CONTROL NARRATIVES STRUCTURE AND CONTENT

The Process Control Narratives detailed in this document describe the control strategies that will be executed by the Supervisory Control and Data Acquisition (SCADA) Enterprise System at the Carbon Canyon Water Recycle Facility (CCWRF).

The following is a description of the format being used to develop these process control narratives:

Overview – Provides a brief description of the process to be monitored and/or controlled by the SCADA System.

Field/Local Control – Describes local control of the major process equipment at the piece of equipment in the field, vendor panel, or the local control panel in a building.

Operator Mode Control – Details manual remote control of the major process equipment that can be performed by the OPERATOR at the HMI screen. Equipment operating under Operator Mode control are affected by process interlocks.

Program Mode Control – Details automatic remote control and monitoring of the major process equipment to be performed by the PAC with set points adjusted at the HMI screen, including any SCADA generated permissives and interlocks used in Program Mode operation.

Normal Operation – Describes the typical modes of operation for the unit process and associated equipment.

Failure Reponses – Details how the system will response to a process or equipment failure.

Operator Adjustable Set Points – Describes the set points which the Operators, Supervisors and/or Programmers can adjust through an HMI screen. The System Integrator shall document all final analog set points.

Permissives – Describes the sequencing that must be performed before a major piece of process equipment is started or stopped by the PAC. For example, grit valves must be in the full open position before a grit pump is allowed to start.

Interlocks – Defines hardwired and software interlocks that exist and software interlocks that are added as part of this process control narrative.

- Software interlocks, PAC Communications interlocks and hardwired interlocks are sometimes active on some equipment, through the PAC. These interlocks can affect Operator and Program modes. These PAC interlocks are typically not in effect when controlling the equipment locally, although there are some cases where hardwired interlocks are in effect in all modes.
- A hardwired interlock may disable a specific piece of equipment from running through electrical control wiring (for example, a limit switch may trip a running pump or prevent starting a pump). Hardwired interlocks can affect both LOCAL and REMOTE modes of control.

- A software interlock may disable a specific piece of equipment from running through the PAC (an example of this would be if a wet well was not considered in service, a pump could be inhibited from operating until the wet well is filled again and returned to service), and is normally only in effect if the device is under REMOTE control (AUTOMATIC or MANUAL Mode).
- A PAC communicated interlock is an interlock where the source is found in one (1) PAC and transferred across the network to a second PAC where the device exists. The interlock is still performed by the software but spread across multiple PACs. This interlock is normally only in effect when the device is under REMOTE control.

Monitoring and Control Signals – Defines physical I/O for the subject equipment. The state provided for discrete inputs and outputs reflects when the contacts are closed. The range or setting for the instrument should be listed here, if applicable.

Calculated Variables – Defines values that are derived through a calculation or elapsed run time. The System Integrator shall validate all calculated variables.

Alarms – Defines software alarms generated based on analog input values and discrete inputs changing state or failing to change state upon demand. The System Integrator shall document all alarms.

Influent Pump Station (IPS)

1.1b1 Overview

The Influent Pump Station (IPS) has dual wet-wells, and each wet-well is equipped with its own pump station. Influent Pump Station No.1 (IPS1) is equipped with five constant speed dry mount pumps located in the southern wet-well. Influent Pump Station No.2 (IPS2) is equipped with three submersible pumps located in the northern wet-well. Two of the pumps have variable speed drives, and one pump is a constant speed unit. Both influent pump stations share the north concrete wall of IPS1. The raw sewage pumps lift the influent sewage from the raw sewage pump station wet-well up to the Headworks Flow Splitter and from this splitter to the two grit removal units. This is a vertical lift of approximately 40 feet total dynamic head (TDH).

The two IPS2 wet-well levels are monitored by ultrasonic level instruments located in the North Wet Well. The wet-well level is controlled within a defined operating range by operating pumps at higher speeds or starting multiple pumps.

IPS2 electrical isolators, variable speed drives and switch gear are located inside the influent pump station Motor Control Center No.3 (MCC3). IPS1 electrical isolators and switch gear are located in Motor Control Center No.1 (MCC1).

Table 1.1b.1 – Equipment list

Equipment	Field Tag	Smart Tag
IPS2 Wet Well Level 2A	LIT-1101	04-LIT-0201BA
IPS2 Wet Well Level 2B	LIT-1102	04-LIT-0202BB
Influent IPS2 Wet Well Level Switch High-High	LSLL-1101	04-LSLL-0201BB
Influent IPS2 Wet Well Level Switch Low-Low	LSLL-1101	04-LSLL-0201BB
Plant Influent Flow	FIT-1101	04-FIT-0201BA
IPS1 Pump 1	P-1110	04-PMP-0210BA
IPS1 Pump 2	P-1120	04-PMP-0220BA
IPS1 Pump 3	P-1130	04-PMP-0230BA
IPS1 Pump 4	P-1140	04-PMP-0240BA
IPS1 Pump 5	P-1150	04-PMP-0250BA
IPS2 Pump 6	P-1160	04-PMP-0260BB
IPS2 Pump 6 VFD	VFD-1160	04-VFD-0260BB
IPS2 Pump 7	P-1170	04-PMP-0270BB

Equipment	Field Tag	Smart Tag
IPS2 Pump 7 VFD	VFD-1170	04-VFD-0270BB
IPS2 Pump 8	P-1180	04-PMP-0280BB
IPS2 Pump 8 RVSS	RVSS-1180	04-RVSS-0280BB

1.1b2 Field/Local Control

Local Manual control of the influent pumps is provided through the LOCAL-OFF-REMOTE (L-O-R) selector switch and speed controller on the VFD for the variable speed pumps. The fixed speed pumps are controlled through the L-O-R selector switch and will run if in Local – On.

1.1b3 Operator Mode Control

Remote manual control is provided through RTU-1: when REMOTE is selected at the VFD LOCAL--REMOTE (L- R) switch for (P-6 & P-7), and REMOTE selected at the RVSS control panel (P-8), and the H-O-A switches at the local panel for existing IPS pumps placed in AUTO (P-1 through P-5).

The Operator selects OPERATOR control mode on the HMI and can Start/Stop pumps through pushbuttons on the HMI and adjust speed of the variable speed pumps from the HMI.

1.1b4 Program Mode Control

Remote automatic control is provided through the RTU. The operator selects PROGRAM control mode at the HMI and all variable speed pumps in REMOTE and constant speed pumps in REMOTE or AUTO will be controlled by the auto sequencing function.

Lead-Lag sequence selection.

- The Operator assigns the LEAD designation to the VFD pumps P-6 or P-7 of their choice from the HMI
- The VFD pump NOT selected as LEAD will be configured as the STANDBY1 pump.
- The constant speed 100 HP pump P-8 is permanently assigned as STANDBY2 and will be called to run if both Pumps P-6 and P-7 are not available.
- The Operator assigns LAG1, LAG2, LAG3, LAG4, and LAG5 to the remaining 50 HP constant speed pumps (P-1 through P-5) from the HMI

The controlling pump station wet-well level signal is selectable between IPS2A or IPS2B.

There are two (2) aspects in pump control while in PROGRAM Mode. Specifically, cascade closed loop operation or single closed loop operation (If the pump discharge flow meter (FIT-1101) fails, SCADA will automatically switch from cascade closed loop operation to single closed loop operatoin). Each of these aspects are described below.

I. **Cascade Closed Loop Operation**: The influent pumps are operated based on a cascade loop PID, whereby a Primary Level Control PID and Secondary Flow Control PID are utilized.

   The **Primary Level Control PID** has a "Wet Well Operating Level" setpoint in feet and modulates the output using the operator selected influent level transmitter (IPS2A or IPS2B) as its process variable. The control variable output of the Primary Level Control PID is scaled to 0 to the *Max Plant Flow Set Point* (in MGD) and is used as the setpoint for the Secondary Flow Control PID.

   The **Secondary Flow Control PID** uses the flowmeter FIT-1101 as its process variable which is also scaled 0 to 47.52 MGD. When the water level reaches the LEAD pump start level set point, the pump cycle will begin. The LEAD pump shall start at its minimum speed and the VFD shall vary the pump speed. Based on the output from the Primary Level Control PID, the Secondary Flow Control PID modulates the pump speed based on the influent flowmeter transmitter FIT-1101. The output of the Secondary PID is 0 to 100% and controls the speed of the VFD pump.

II. **Single Closed Loop Operation:** A failure of the influent flowmeter transmitter or an operator selection sends a priority one alarm (No Cascade Loop available) and the influent pump station cascade loop PID reverts automatically to a single closed loop PID operation (Primary Level Control PID only) whereby it utilizes the "Wet Well Operating Level" setpoint, modulates the output based on the influent wetwell level, and the output from the Primary Level Control PID is 0 – 100 % and will control the speed of the influent pumps.

   Under the single loop/Primary Level PID mode, the Primary Level PID will use the same wetwell level setpoint in feet and modulates the output using the same, operator selected, influent level transmitter as its process variable. When the water level reaches the LEAD pump start level set point the pump cycle will begin. The LEAD pump shall start at its minimum speed and the VFD shall vary the pump speed.

The system operates on a LEAD-LAG1-LAG2-LAG3-LAG4-LAG5 (remaining VFD is STANDBY1 and RVSS is STANDBY2) sequence. The pump speed and number of pumps in operation are normally controlled by either a Cascaded Closed Loop or Single Closed Loop Operation, as decribed above, to maintain the wet-well operating level set-point. The pump station wet-well level control system stages the pumps to control the

level in the wet-well as follows:

A. The LEAD (operator selectable between P-6 or P-7) large (100 hp) variable speed pump starts as the level in the wet-well rises to the “Wet Well Level Start Setpoint”, which is operator adjustable on the HMI. The LEAD variable speed pump shall adjust its speed to maintain the “Wet Well Operating Level Setpoint”.
B. The STANDBY1 (the opposite of the LEAD selectable P-6 or P-7) large (100 hp) variable speed pump serves as a backup during this period. If the selected LEAD pump fails, the STANDBY1 VFD pump will take its place in the sequence as the LEAD pump.
C. The next available LAG pump(s) shall start, if the level continues to increase while the LEAD VFD pump speed is greater than the “Pump Sequence VFD Maximum Speed Setpoint” for the “Pump Start Delay” time period. Once the LAG pump starts, the speed of the LEAD VFD pump shall decrease to maintain the “Wet Well Operating Level” setpoint.

If the wet-well level drops below the wet-well level set-point, the variable speed pump will operate at the minimum speed set-point. If a LAG pump is running, and the variable speed pump speed is less than the “Pump Sequence VFD Minimum Speed Setpoint “ for the “Pump Stop Delay” time period, the first LAG pump that was called will be stopped. The LEAD variable speed pump shall adjust its speed to maintain the “Wet Well Operating Level” setpoint.

If the wet-well level drops below the minimum set-point the LEAD pump continues to run at its “Pump Sequence VFD Minimum Speed Setpoint” and this condition is alarmed at the operator workstation.

If the level in the wet-well continues to decrease the LEAD variable speed pump is stopped when the level is below the “Wet Well Level Pump Stop” setpoint, which is operator adjustable on the HMI.

If any constant speed pump (P-1 thru P-5 or P-8) fails to start, the next available constant speed pump will start after the “Pump Start Delay” time period has expired.

Pumps P-6 and P-7 shall rotate automatically in a First-In-First-Out (FIFO) configuration or at an operator adjustable *VFD Pump Runtime Interval*. Pumps P-1 through P-5 shall rotate automatically in a First-In-First-Out (FIFO) configuration. In addition, the operator can manually initiate a rotation of any of the pumps.

1.1b5 Normal Operation

The normal operation of the influent pumping stations is to have all pumps in REMOTE/PROGRAM mode with the VFD pumps operating based upon the output command of a Proportional Integral (PI) Controller. Constant speed pumps will start and stop in response to changing demands based upon the operation of the VFD pumps and the rising and falling wet well level.

1.1b6 Failure Responses

Table 1.b.6 - Influent – Pump Station Failures

Failures	Response
Influent VFD Pump Failure	Alarm generated. The pump will no longer be requested to run by the PAC until the alarm is cleared. The Operator may start another pump or if operating in Automatic Mode the Standby Pump will start. The remaining Influent Pump System equipment will continue to run in automatic.
Influent Pump Failure	Alarm generated. The pump will no longer be requested to run by the PAC until the alarm is cleared. The Operator may start another pump or if operating in Automatic Mode a Lag or Standby Pump will start. The remaining Influent Pump System equipment will continue to run in automatic.
IPS2A Wet Well Level Transmitter Failure	Alarm generated. Switch operation to IPS2B Wet Well Level transmitter.
IPS2B Wet Well Level Transmitter Failure	Alarm generated. Switch operation to IPS2A Wet Well Level transmitter.
Both Wet Well Level Transmitter Failure	Alarm generated. The pumps will no longer be requested to run by the PAC until the alarm is cleared. The Operator will need to run the pump station in Local/Field mode or in Operator Control Mode from SCADA until the level transmitters are repaired/replaced.
RP-4 Plant Influent Flow Failure	Alarm generated. Switch VFD speed control from Cascaded Closed Loop Operation to Single Closed Loop Operation (level control only).
PAC Failure	Alarm generated. The Operator will have to start and stop the IPS pump in local manual. Refer to Section 6.3.b PAC System Failure for additional information.

1.1b7 Operator Adjustable Set Points

Table 1.1b.7 – Influent – Pump Station Set Points

Parameter	HMI Display	Range	Initial Set Point	Security Level
Wet Well Level Pump Start Setpoint	XX.X FT	0.0 – 20.0	11.0	2

Parameter	HMI Display	Range	Initial Set	Security Level
Wet Well Level Operating Setpoint	XX.X FT	0.0 – 20.0	10.0	2
Wet Well Level Pump Stop Setpoint	XX.X FT	0.0 -20.0	6.0	2
Maximum Flow Limit Setpoint	XX.XX MGD	0.00 – 47.52	15.00	2
Pump Sequence VFD Minimum Speed Setpoint	XXX%	0 - 100	6	2
Pump Sequence VFD Maximum Speed Setpoint	XXX%	0 - 100	92	2
Pump Stop Delay Setpoint *	XXX SEC	0 - 300	60	2
Pump Start Delay Setpoint *	XXX SEC	0 - 300	120	2
VFD Pump Runtime Interval (to Rotate)	XXX DAYS	0 - 60	30	2

Notes:
1. Feet refers to the fluid depth in the wet well above the floor just below the pump intake
2. See Table **Error! Reference source not found.** below for alarm details.
3. Security Level – 1 = Engineer/Programmer, 2 = Supervisor, 3 = Operator
4. * These setpints will be applied to timers specific for each LAG pump

1.1b8 Permissives

Permissives associated with the system are the following:

Table 1.1b.8 – Influent Pump Station Permissives

Description	OK State	Bypassable
Pump HOA in Auto	1	Y

1.1b9 Interlocks

The System Integrator shall validate all software interlocks.

The interlocks associated with the system are the following:

Software Interlocks:

Table 1.1b.9a – Influent Pump Station Software Interlocks

Description	OK State	Bypassable

Wet Well Level Switch Low-Low	1	Y
Pump Motor Temperature High (Pumps 1-5)	0	Y
Pump Fail (Pumps 6-8)	0	Y

Hardware Interlocks:

Table 1.1b.9b – Influent Pump Station Hardware Interlocks

Description	OK State	Bypassable
In all control modes, all pumps have a hardwired interlock to stop when level in the wet-well decreases and reaches the Low Level Cutoff switch trips at 3.5 feet.	1	Y

1.1b10 Monitoring and Control Signals

The System Integrator shall provide I/O tags per the IEUA High-Performance HMI and PAC Standards.

Table 1.1b.10 - Influent - Pump Station I/O

I/O Tag	Type	Description	Range	SCADA Function			
				Monitor	Trend/ Historize	Total	Alarm
Influent Pump Station							
P04_LIT_0201BA_S	AI	IPS2 Wet Well Level 2A	0.0-20.0 ft	✓	T/H		✓
P04_LIT_0202BB_S	AI	IPS2 Wet Well Level 2B	0.0-20.0 ft	✓	T/H		✓
P04_LSHH_0201BB_J	DI	IPS2 Wet Well Level Switch High-High		✓			✓
P04_LSLL_0201BB_J	DI	IPS2 Wet Well Level Switch Low-Low		✓	H		✓
P04_FIT_0201BA_C	AI	Plant Influent Flow (existing tag: S04_FIT_0201BA)	0.0-47.52 MGD	✓	T/H	✓	
Influent Pumps							
P04_PMP_0210BA_AUTO	DI	IPS1 Pump 1 HOA in Auto	N/A	✓			✓
P04_PMP_0210BA_HAND	DI	IPS1 Pump 1 HOA in Hand	N/A	✓			
P04_PMP_0210BA_ON	DI	IPS1 Pump 1 Run Status	N/A	✓	T/H	✓	
P04_PMP_0210BA_J02	DI	IPS1 Pump 1 Motor High Temperature	N/A	✓			✓
P04_PMP_0210BA_STRT	DO	IPS1 Pump 1 Start/Stop Command	N/A	✓			
P04_PMP_0220BA_AUTO	DI	IPS1 Pump 2 HOA in Auto	N/A	✓			✓
P04_PMP_0220BA_HAND	DI	IPS1 Pump 2 HOA in Hand	N/A	✓			
P04_PMP_0220BA_ON	DI	IPS1 Pump 2 Run Status	N/A	✓	T/H	✓	
P04_PMP_0220BA_J02	DI	IPS1 Pump 2 Motor High Temperature	N/A	✓			✓
P04_PMP_0220BA_STRT	DO	IPS1 Pump 2 Start/Stop Command	N/A	✓			

I/O Tag	Type	Description	Range	SCADA Function			
				Monitor	Trend/ Historize	Total	Alarm
P04_PMP_0230BA_AUTO	DI	IPS1 Pump 3 HOA in Auto	N/A	✓			✓
P04_PMP_0230BA_HAND	DI	IPS1 Pump 3 HOA in Hand	N/A	✓			
P04_PMP_0230BA_ON	DI	IPS1 Pump 3 Run Status	N/A	✓	T/H	✓	
P04_PMP_0230BA_J02	DI	IPS1 Pump 3 Motor High Temperature	N/A	✓			✓
P04_PMP_0230BA_STRT	DO	IPS1 Pump 3 Start/Stop Command	N/A	✓			
P04_PMP_0240BA_AUTO	DI	IPS1 Pump 4 HOA in Auto	N/A	✓			✓
P04_PMP_0240BA_HAND	DI	IPS1 Pump 4 HOA in Hand	N/A	✓			
P04_PMP_0240BA_ON	DI	IPS1 Pump 4 Run Status	N/A	✓	T/H	✓	
P04_PMP_0240BA_J02	DI	IPS1 Pump 4 Motor High Temperature	N/A	✓			✓
P04_PMP_0240BA_STRT	DO	IPS1 Pump 4 Start/Stop Command	N/A	✓			
P04_PMP_0250BA_AUTO	DI	IPS1 Pump 5 HOA in Auto	N/A	✓			✓
P04_PMP_0250BA_HAND	DI	IPS1 Pump 5 HOA in Hand	N/A	✓			
P04_PMP_0250BA_ON	DI	IPS1 Pump 5 Run Status	N/A	✓	T/H	✓	
P04_PMP_0250BA_J02	DI	IPS1 Pump 5 Motor High Temperature	N/A	✓			✓
P04_PMP_0250BA_STRT	DO	IPS1 Pump 5 Start/Stop Command	N/A	✓			
P04_VFD_0260BA_AUTO	DI	IPS2 Pump 6 VFD HOA in Auto	N/A	✓			✓
P04_VFD_0260BA_ON	DI	IPS2 Pump 6 Run Status	N/A	✓	T/H	✓	
P04_VFD_0260BA_FAIL	DI	IPS2 Pump 6 Drive Fault	N/A	✓			✓
P04-_VFD_0260BA_AR_PV	AI	IPS2 Pump 6 Speed Feedback	0-100%	✓	T/H		
P04_VFD_0260BA_STRT	DO	IPS2 Pump 6 Start Command	N/A	✓			
P04_VFD_0260BA_STOP	DO	IPS2 Pump 6 Stop Command	N/A	✓			
P04_VFD_0260BA_RES	DO	IPS2 Pump 6 Reset	N/A	✓			
P04-_VFD_0260BA_AR_CV	AO	IPS2 Pump 6 Speed Reference	0-100%	✓			
P04_VFD_0270BA_AUTO	DI	IPS2 Pump 7 VFD HOA in Auto	N/A	✓			✓
P04_VFD_0270BA_ON	DI	IPS2 Pump 7 Run Status	N/A	✓	T/H	✓	
P04_VFD_0270BA_FAIL	DI	IPS2 Pump 7 Drive Fault	N/A	✓			✓
P04-_VFD_0270BA_AR_PV	AI	IPS2 Pump 7 Speed Feedback	0-100%	✓	T/H		
P04_VFD_0270BA_STRT	DO	IPS2 Pump 7 Start Command	N/A	✓			
P04_VFD_0270BA_STOP	DO	IPS2 Pump 7 Stop Command	N/A	✓			
P04_VFD_0270BA_RES	DO	IPS2 Pump 7 Reset	N/A	✓			
P04-_VFD_0270BA_AR_CV	AO	IPS2 Pump 7 Speed Reference	0-100%	✓			
P04-_RVSS_0280BA_AUTO	DI	IPS2 Pump 8 HOA in Auto	N/A	✓			✓

I/O Tag	Type	Description	Range	SCADA Function			
				Monitor	Trend/ Historize	Total	Alarm
P04_RVSS_0280BA_ON	DI	IPS2 Pump 8 Run Status	N/A	✓	T/H	✓	
P04_RVSS_0280BA_FAIL	DI	IPS2 Pump 8 RVSS Fault	N/A	✓			✓
P04-_RVSS_0280BA_STRT	DO	IPS2 Pump 8 Start Command	N/A	✓			
P04-_RVSS_0280BA_STOP	DO	IPS2 Pump 8 Stop Command	N/A	✓			
P04-_RVSS_0280BA_ENBL	DO	IPS2 Pump 8 Enable	N/A	✓			

1.1b11 Calculated Variables

The System Integrator to validate all calculated variables.

Provide the following SCADA generated variables for the system:

- Starts/Runtimes
- Influent Flow Totals

1.1b12 Alarms

The System Integrator shall provide Alarm tags per the IEUA High-Performance HMI and PAC Standards.

The System Integrator shall document alarm default values, alarm severity set points and security level.

Provide the following SCADA generated alarms for the system:

Table 1.1b.12 – Influent - Pump Station Alarms

ALARM TAG NAME	ALARM DESCRIPTION	DEFAULT	DEADBAND	DELAY	HMI	SEVERITY
P04_LSHH_0201BB_J_AOI.Alm_TgtDisagree	IPS Wet Well Level Switch High-High	N/A	N/A	1 s	✓	1
P04_LSLL_0201BB_J_AOI.Alm_TgtDisagree	IPS Wet Well Level Switch Low-Low	N/A	N/A	1 s	✓	1
P04_LIT_0201BA_S_AOI.Alm_HiHi	IPS2A Wet Well Level High-High	N/A	5%	5 s	✓	1
P04_LIT_0201BA_S_AOI.Alm_Hi	IPS2A Wet Well Level High	16.5	5%	15 s	✓	1
P04_LIT_0201BA_S_AOI.Alm_Lo	IPS2A Wet Well Level Low	4.0	5%	15 s	✓	2
P04_LIT_0201BA_S_AOI.Alm_LoLo	IPS2A Wet Well Level Low-Low	3.5	5%	5 s	✓	1
P04_LIT_0201BA_S_AOI.Alm_Fail	IPS2A Wet Well Level Transmitter Failure	N/A	N/A	1 s	✓	1
P04_LIT_0202BB_S_AOI.Alm_HiHi	IPS2B Wet Well Level High-High	17.0	5%	5 s	✓	1
P04_LIT_0202BB_S_AOI.Alm_Hi	IPS2B Wet Well Level High	16.5	5%	15 s	✓	1
P04_LIT_0202BB_S_AOI.Alm_Lo	IPS2B Wet Well Level Low	4.0	5%	15 s	✓	2
P04_LIT_0202BB_S_AOI.Alm_LoLo	IPS2B Wet Well Level Low-Low	3.5	5%	5 s	✓	1
P04_LIT_0202BB_S_AOI.Alm_Fail	IPS2B Wet Well Level Transmitter Failure	N/A	N/A	1 s	✓	1
P08_LIT_0201BA_0202BB_S_AOI.Alm_Diff	IPS Wet Well Level Dual Hi Input Difference	N/A	N/A	5 s	✓	1
P08_LIT_0201BA_0202BB_S_AOI.Alm_NoneGood	IPS Wet Well Level Dual Neither Input Good	N/A	N/A	5 s	✓	1
P08_LIT_0201BA_0202BB_S_AOI.Alm_OneGood	IPS Wet Well Level Dual Only 1 Good Input	N/A	N/A	5 s	✓	1
P08_LIT_0201BA_0202BB_S_AOI.Alm_HiHi	IPS Wet Well Level Dual High-High	17.0 FT	5%	5 s	✓	1
P08_LIT_0201BA_0202BB_S_AOI.Alm_Hi	IPS Wet Well Level Dual High	16.5 FT	5%	5 s	✓	2
P08_LIT_0201BA_0202BB_S_AOI.Alm_Lo	IPS Wet Well Level Dual Low	4.0 FT	5%	5 s	✓	2

ALARM TAG NAME	ALARM DESCRIPTION	DEFAULT	DEADBAND	DELAY	HMI	SEVERITY
P08_LIT_0201BA_0202BB_S_AOI.Alm_LoLo	IPS Wet Well Level Dual Low-Low	3.5 FT	5%	5 s	✓	1
P08_LIT_0201BA_0202BB_S_AOI.Alm_Fail	IPS Wet Well Level Dual Transmitter Fail	N/A	N/A	1 s	✓	1
P04_FIT_0201BA_C_AOI.Alm_HiHi	Plant Influent Flow High-High	15.0	5%	5 s	✓	1
P04_FIT_0201BA_C_AOI.Alm_Hi	Plant Influent Flow High	14.5	5%	5 s	✓	1
P04_FIT_0201BA_C_AOI.Alm_Fail	Plant Influent Flow Transmitter Failure	N/A	N/A	1 s	✓	2
P04_PMP_0201BA_J02_AOI.Alm_TgtDisagree	IPS1 Pump 1 Motor Temperature High	N/A	N/A	5 s	✓	1
P04_PMP_0210BA_AUTO_AOI.Alm_TgtDisagree	IPS1 Pump 1 HOA Not in Auto	N/A	N/A	5 s	✓	3
P04_PMP_0210BA_AOI.Alm_FailToStart	IPS1 Pump 1 Fail to Start	N/A	N/A	10 s	✓	1
P04_PMP_0210BA_AOI.Alm_FailToStop	IPS1 Pump 1 Fail to Stop	N/A	N/A	10 s	✓	1
P04_PMP_0202BA_J02_AOI.Alm_TgtDisagree	IPS1 Pump 2 Motor Temperature High	N/A	N/A	5 s	✓	1
P04_PMP_0220BA_AUTO_AOI.Alm_TgtDisagree	IPS1 Pump 2 HOA Not in Auto	N/A	N/A	5 s	✓	3
P04_PMP_0220BA_AOI.Alm_FailToStart	IPS1 Pump 2 Fail to Start	N/A	N/A	10 s	✓	1
P04_PMP_0220BA_AOI.Alm_FailToStop	IPS1 Pump 2 Fail to Stop	N/A	N/A	10 s	✓	1
P04_PMP_0203BA_J02_AOI.Alm_TgtDisagree P04_PMP_0230BA_FAIL_AOI. Alm_TgtDisagree	IPS1 Pump 3 Motor Temperature High	N/A	N/A	5 s	✓	1
P04_PMP_0230BA_AUTO_AOI.Alm_TgtDisagree	IPS1 Pump 3 HOA Not in Auto	N/A	N/A	5 s	✓	3
P04_PMP_0230BA_AOI.Alm_FailToStart	IPS1 Pump 3 Fail to Start	N/A	N/A	10 s	✓	1
P04_PMP_0230BA_AOI.Alm_FailToStop	IPS1 Pump 3 Fail to Stop	N/A	N/A	10 s	✓	1
P04_PMP_0204BA_J02_AOI.Alm_TgtDisagree P04_PMP_0240BA_FAIL_AOI. Alm_TgtDisagree	IPS1 Pump 4 Motor Temperature High	N/A	N/A	5 s	✓	1
P04_PMP_0240BA_AUTO_AOI.Alm_TgtDisagree	IPS1 Pump 4 HOA Not in Auto	N/A	N/A	5 s	✓	3
P04_PMP_0240BA_AOI.Alm_FailToStart	IPS1 Pump 4 Fail to Start	N/A	N/A	10 s	✓	1
P04_PMP_0240BA_AOI.Alm_FailToStop	IPS1 Pump 4 Fail to Stop	N/A	N/A	10 s	✓	1
P04_PMP_0205BA_J02_AOI.Alm_TgtDisagree	IPS1 Pump 5 Motor Temperature High	N/A	N/A	5 s	✓	1

ALARM TAG NAME	ALARM DESCRIPTION	DEFAULT	DEADBAND	DELAY	HMI	SEVERITY
P04_PMP_0250BA_AUTO_AOI.Alm_TgtDisagree	IPS1 Pump 5 HOA Not in Auto	N/A	N/A	5 s	✓	3
P04_PMP_0250BA_AOI.Alm_FailToStart	IPS1 Pump 5 Fail to Start	N/A	N/A	10 s	✓	1
P04_PMP_0250BA_AOI.Alm_FailToStop	IPS1 Pump 5 Fail to Stop	N/A	N/A	10 s	✓	1
P04_VFD_0260BA_FAIL_AOI. Alm_TgtDisagree	IPS2 Pump 6 Drive Fault	N/A	N/A	5 s	✓	1
P04_VFD_0260BA_AUTO_AOI.Alm_TgtDisagree	IPS2 Pump 6 HOA Not in Auto	N/A	N/A	5 s	✓	3
P04_VFD_0260BA_AOI.Alm_FailToStart	IPS2 Pump 6 Fail to Start	N/A	N/A	10 s	✓	1
P04_VFD_0260BA_AOI.Alm_FailToStop	IPS2 Pump 6 Fail to Stop	N/A	N/A	10 s	✓	1
P04_VFD_0270BA_FAIL_AOI. Alm_TgtDisagree	IPS2 Pump 7 Drive Fault	N/A	N/A	5 s	✓	1
P04_VFD_0270BA_AUTO_AOI.Alm_TgtDisagree	IPS2 Pump 7 HOA Not in Auto	N/A	N/A	5 s	✓	3
P04_VFD_0270BA_AOI.Alm_FailToStart	IPS2 Pump 7 Fail to Start	N/A	N/A	10 s	✓	1
P04_VFD_0270BA_AOI.Alm_FailToStop	IPS2 Pump 7 Fail to Stop	N/A	N/A	10 s	✓	1
P04_RVSS_0280BA_FAIL_AOI. Alm_TgtDisagree	IPS2 Pump 8 RVSS Fault	N/A	N/A	5 s	✓	1
P04_RVSS_0280BA_AUTO_AOI.Alm_TgtDisagree	IPS2 Pump 8 HOA Not in Auto	N/A	N/A	5 s	✓	3
P04_RVSS_0280BA_AOI.Alm_FailToStart	IPS2 Pump 8 Fail to Start	N/A	N/A	10 s	✓	1
P04_RVSS_0280BA_AOI.Alm_FailToStop	IPS2 Pump 8 Fail to Stop	N/A	N/A	10 s	✓	1

Note: HMI = HMI Graphic

Table 1.1b.12b – Alarm Severity Legend

PCN Severity	PlantPAx Severity Name	PlantPAx Severity Level
1	Urgent	751-1000
2	High	501-750
3	Medium	251-500
4	Low	1-250

Inland Empire Utilities Agency
A MUNICIPAL WATER DISTRICT

Section 4-Electrical and I&C-Appendices

ii Equipment Tagging

AVAD ENGINEERING

ii Equipment Tagging

Revision 0.8

IEUA Equipment Tag Guidelines

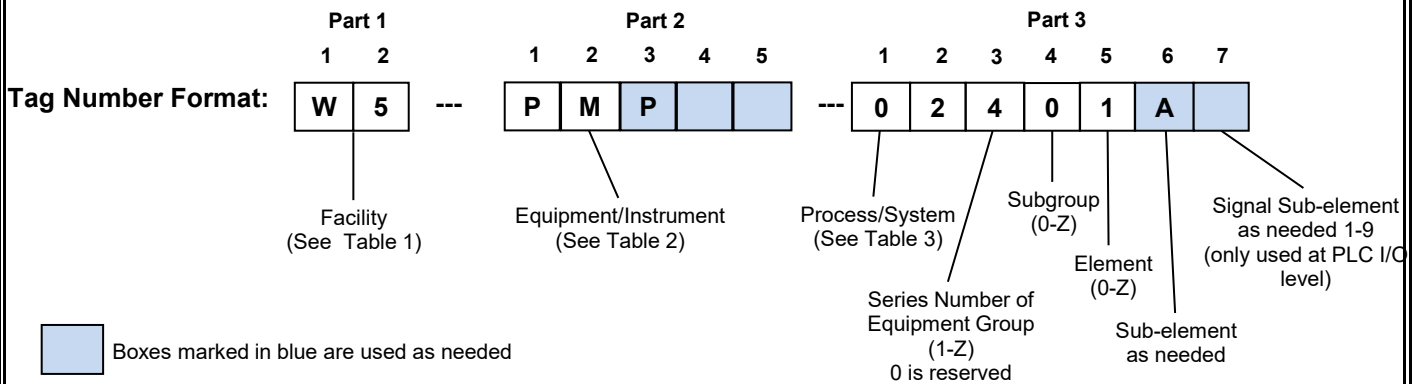

Instructions:

Equipment Tags

> **Part 1: Facility**
>> consists of 2 characters, indicating the Facility where the equipment/instrument resides (see **Table 1**)

> **Part 2: Equipment/Instrument**
>> consists of anywhere from 2-5 characters (see **Table 2**).

>> **Part 3: Process/System, Series, Element**
>> **1st & 2nd Digit** = Process/System Designation. Refer to the **Table 3** that corresponds to the process group of the facility selected from **Table 1**.
>> **3rd Digit** = Series Number (Equipment Group) (1-Z).
"0" is reserved for items that apply to the entire process/system, e.g. SCADA panel
>> **4th Digit** = Sub-group (If equipment group is small and no sub-group applies, use 0)
>> **5th Digit** = Element within the Equipment Group / sub-group
>> **6th & 7th Digit** = These digits are used as needed to further identify and distinguish various signals of the equipment. Only applies to equipment that has multiple signals of the same type.

The different parts of the tag will be separated either by a hyphen "-" or an underscore "_" depending on the

Examples within Factility RP5:

SmartTag	Equipment	Process/System	Group	Subgroup	Element

Table 1: IEUA Facility Designation

Every line item should be a separate location (physical address), with the exception of Recycled Water Pump Stations, which are individually listed in this table regardless of physical location.

Facility Description	Process Group	Facility Designation
RP-1	Wastewater	W1
RP-2	Wastewater	W2
CCWRF	Wastewater	W3
RP-4	Wastewater	W4
RP-5	Wastewater	W5
Prado Dechlorination Station	Wastewater	WD
RP-5S (Solids Handling Facility)	Food Waste Handling	F1
San Bernardino Lift Station	Collections Process/System	C1
Montclair Diversion Structure	Collections Process/System	C2
Montclair Lift Station	Collections Process/System	C3
Philadelphia Lift Station	Collections Process/System	C4
RP-2 Lift Station	Collections Process/System	C5
CIW Lift Station	Collections Process/System	C6
IEBL Dump Station	Collections Process/System	C7
Chino Preserve Lift Station	Collections Process/System	C8
Mountain Lift Station (future)	Collections Process/System	C9
Prado Golf Course Lift Station (future)	Collections Process/System	CA
HQ A	Facility	HA
HQ B	Facility	HB
HQ Lab	Facility	HL
6B Tower	Facility	H6
Chino Creek Park	Facility	HP
IERCF	Compost/Biosolids	I1
CDA	Potable Water	PA
Well 1	Potable Water	P1
Well 2	Potable Water	P2
Well 3	Potable Water	P3
Well 4	Potable Water	P4
Well 5	Potable Water	P5
Well 6	Potable Water	P6
Well 7	Potable Water	P7
Well 8	Potable Water	P8
Well 9	Potable Water	P9
Well 10	Potable Water	PA
Well 11	Potable Water	PB
Well 12	Potable Water	PC
Well 14	Potable Water	PD
Well 15	Potable Water	PE
Well 16	Potable Water	PF
Well 17	Potable Water	PG
Well 18	Potable Water	PH

Table 1: IEUA Facility Designation

Every line item should be a separate location (physical address), with the exception of Recycled Water Pump Stations, which are individually listed in this table regardless of physical location.

Facility Description	Process Group	Facility Designation
Well 20	Potable Water	PI
Well 21	Potable Water	PJ
ZONE 800 Distribution System	Recycled Water	R1
ZONE 930 Distribution System	Recycled Water	R2
ZONE 1050 Distribution System	Recycled Water	R3
ZONE 1158 Distribution System	Recycled Water	R4
ZONE 1299 Distribution System	Recycled Water	R5
ZONE 1630 Distribution System	Recycled Water	R6
RP-5 800 Pump Station	Recycled Water	R7
CCWRF 930 Pump Station	Recycled Water	R8
RP-1 930 Pump Station	Recycled Water	R9
RP-1 1050 Pump Station	Recycled Water	RA
RP-1 1158 Pump Station	Recycled Water	RB
RP-4 1158 Pump Station	Recycled Water	RC
RP-4 1299 Pump Station	Recycled Water	RD
1630 East Pump Station	Recycled Water	RE
1630 West Pump Station	Recycled Water	RF
930 Reservoir	Recycled Water	RG
1158 Reservoir	Recycled Water	RH
1299 Reservoir	Recycled Water	RI
1630 West Reservoir	Recycled Water	RJ
RP3	Groundwater	G1
CB-11	Groundwater	G2
CB-13	Groundwater	G3
CB-14	Groundwater	G4
CB-15	Groundwater	G5
CB-18	Groundwater	G6
CB-20	Groundwater	G7
OC-59	Groundwater	G8
College Height	Groundwater	G9
Upland	Groundwater	GA
Montclair	Groundwater	GB
Brooks	Groundwater	GC
7th & 8th Street	Groundwater	GD
Ely	Groundwater	GE
Turner 1 &2	Groundwater	GF
Turner 3 & 4	Groundwater	GG
Lower Day	Groundwater	GH
Etiwanda Debris	Groundwater	GI
Victoria	Groundwater	GJ
San Sevaine	Groundwater	GK

Table 1: IEUA Facility Designation

Every line item should be a separate location (physical address), with the exception of Recycled Water Pump Stations, which are individually listed in this table regardless of physical location.

Facility Description	Process Group	Facility Designation
Banana	Groundwater	GL
Hickory	Groundwater	GM
Declez	Groundwater	GN
Grove	Groundwater	GO
Jurupa	Groundwater	GP
Etiwanda Conservation	Groundwater	GQ
Orchard	Groundwater	GR
Wineville	Groundwater	GS
		NX

Table 2 - Equipment Technical Descriptor

Description of Technical Object	Technical Descriptor
Actuator	**ACT**
Air Conditioner	**AC**
Air Release Valve	**ARV**
Air Release/Vacuum Relief Valve	**AVRV**
Air Separator	**ASPR**
Automatic Transfer Switch	**ATS**
Backflow Preventer	**BFP**
Basin (Emergency Storage, Overflow, Equalization a	**BSN**
Battery	**BAT**
Blender	**BLDR**
Blow Off	**BO**
Blower	**BLWR**
Boiler	**BLR**
Branch Circuit Controller	**BCC**
Building	**BLDG**
Burner	**BNR**
Bus Duct	**BD**
Cannon	**CANN**
Carbon Adsorption Unit	**CAU**
Cathodic Protection Station	**CPS**
Centrifuge	**CNFG**
Channel	**CHNL**
Check Valve	**CVLV**
Chiller	**CHLR**
Chlorine Contact Basin	**CCB**
Chute	**CHUT**
Clarifier	**CLF**
CoGen	**COGN**
Compressor	**COMP**
Condenser	**COND**
Conveyor	**CVR**
Crane	**CRAN**
Dam	**DAM**
Damper	**DMP**
Disconnect Switch	**DS**

Table 2 - Equipment Technical Descriptor

Description of Technical Object	Technical Descriptor
Distribution Panelboard	**DP**
Drive	**DRV**
Dryer	**DRYR**
Engine	**ENG**
Evaporative Cooling Unit	**ECU**
Eye Wash	**EYEW**
Fan	**FAN**
Fan Coil Unit	**FCU**
Feeder	**FDR**
Filter	**FLTR**
Flare	**FLAR**
Fuel Cell	**FLCL**
Gate	**GATE**
Generator	**GEN**
Grinder	**GNDR**
Harmonic Filter	**HFLT**
Heat Exchanger	**HXGR**
Heat Recovery Silencer	**HRS**
Instantaneous Water Heater	**IWS**
Leveler	**LVL**
Lighting Panel	**LP**
Local Control Station	**LCS**
Louver	**LVR**
Lube Oil System	**LUBS**
Manhole	**MH**
Manual Transfer Switch	**MTS**
Membrane Cassette	**CASS**
Mixer	**MXR**
Motor	**MTR**
Motor Control Center	**MCC**
Motor Control Panel	**MCP**
Pipe	**PIPE**
Pressure Regulating (Safety, Relief) Valve	**PRV**
Pressure Vacuum Relief Valve	**PVRV**
Pump	**PMP**
Pump (Air)	**APMP**
Sampler	**SMP**

Table 2 - Equipment Technical Descriptor

Description of Technical Object	Technical Descriptor
Screen	**SCRN**
Selective Catalytic Reducer	**SCR**
Shower	**SHWR**
Silencer	**SLCR**
Silo	**SILO**
Solar	**SOLR**
Solenoid Valve	**SV**
Strainer	**STNR**
Switchboard	**SWBD**
Switchgear	**SWGR**
Tank	**TNK**
Tipping Trough	**TTR**
Tower	**TWR**
Transformer	**TX**
Uninterruptible Power Supply	**UPS**
Vacuum Ejector	**VEJ**
Vacuum Relief Valve	**VRV**
Valve - actuated	**VLV**
Valve - manual	**MVLV**
Variable Frequency Drive	**VFD**
Variable Refrigerant Flow	**VRF**
Washer	**WSH**
Water Filter	**WFLT**
Water Heater	**WH**
Wetwell	**WW**
Wind Turbine	**WND**

Table 2 - Instrument Technical Descriptor

Description of Technical Object	Technical Descriptor
Analytical Alarm High-high / High / Low / Low-low	**AAHH/H/L/LL**
Analytical Control	**AIC**
Analytical Element	**AE**
Analytical Indicating Transmitter	**AIT**
Analytical Indicator	**AI**
Analytical Switch High-High / High /Low / Low-low	**ASHH/H/L/LL**
Analytical Transmitter	**AT**
Analytical Transmitter Failure	**AAT**
Burner Element	**BE**
Current - Overcurrent Alarm high-high / high	**IAHH/H**
Current - Undercurrent Alarm low / low-low	**IAL/LL**
Current Indication	**II**
Differential Pressure Alarm High-high / High / Low / Low-l	**PDAHH/H/L/LL**
Differential Pressure Indicate Control	**PDIC**
Differential Pressure Indicating Transmitter	**PDIT**
Differential Pressure Indication	**PDI**
Differential Pressure Transmitter	**PDT**
Differential Pressure Transmitter Failure	**PDAT**
Equipment Status Indication	**YSI**
Fail Indication (For motors and VFDs, Part 3 digit 6: A-VFD fail, B-Motor fail, C-Overload, D-Backflow alarm)	**YA**
Fail Counter	**YQA**
Fire Alarm	**BA**
Flow Alarm High-high / High / Low / Low-low	**FAHH/H/L/LL**
Flow Element	**FE**
Flow indicating control	**FIC**
Flow Indicating Transmitter	**FIT**
Flow Indication	**FI**
Flow Switch	**FS**
Flow Switch High-high / High / Low / Low-low	**FSHH/H/L/LL**
Flow Totalizer Indication	**FQI**
Flow Totalizer Transmitter	**FQT**
Flow Transmitter	**FT**
Flow Transmitter Failure	**FAT**
Discrete Control/Command from SCADA (Part 3 digit 6: A-start/open, B-stop/close, C-Reset)	**HC**
Hand Switch (Part 3 digit 6: A-start/open, B-stop/close, C-local/remote, D-auto, E-emergency stop, F-forward/reverse, G-reset, H-hand)	**HS**

Table 2 - Instrument Technical Descriptor

Description of Technical Object	Technical Descriptor
Hand Switch Status Indication (Part 3 digit 6: A-start/open, B-stop/close, C-remote, D-auto, E-emergency stop, F-forward/reverse, G-reset, H-hand/local)	**HSI**
Heartbeat Signal	**KP**
Irradiance	**RT**
Level Alarm High-High / High / Low / Low-Low	**LAHH/H/L/LL**
Level Differential Alarm High-high / High / Low / Low-low	**LDAHH/H/L/LL**
Level Differential Indication	**LDI**
Level Element	**LE**
Level Element Failure/Alarm	**LEA**
Level Indicating Control	**LIC**
Level Indicating Transmitter	**LIT**
Level Sight Glass	**LG**
Level Switch	**LS**
Level Switch High-high / High / Low / Low-low	**LSHH/H/L/LL**
Level Switch Interposing Relay	**LY**
Level Transmitter	**LT**
Level Transmitter Failure	**LAT**
Light - Indication Light	**YL**
Moisture Switch High-high / High / Low-low / Low	**MSHH/H/L/LL**
Moisture Alarm High-high / High / Low-low / Low	**MAHH/H/L/LL**
Moisture Transmitter / Humidity	**MT**
Number of Starts	**YQI**
Position Alarm High-high / High / Low / Low-low	**ZAHH/H/L/LL**
Position Switch Alarm (Part 3 digit 6: A-fail to open, B-fail to close)	**ZSA**
Position Command	**ZY**
Position Feedback (analog)	**ZT**
Position Switch	**ZS**
Position Switch/Status Close (includes breaker closed)	**ZSC**
Position Switch/Status Open (includes breaker open)	**ZSO**
Position Switch/Status Counter (includes breaker status c	**ZQ**
Position Status Closed Light Indication	**ZLC**
Position Status Open Light Indication	**ZLO**
Power Alarm	**JA**
Power Indication (Part 3 digit 6: A-real (kW), B-reactive (VAR), C-apparent(VA))	**JI**
Power Status Indication (e.g. Power Available)	**JSI**
Power totalization (e.g. KWH)	**JQ**
Pressure Alarm High-high / High / Low / Low-low	**PAHH/H/L/LL**
Pressure Element	**PE**

Table 2 - Instrument Technical Descriptor

Description of Technical Object	Technical Descriptor
Pressure Indicating Control	**PIC**
Pressure Indicating Transmitter	**PIT**
Pressure Indication	**PI**
Pressure Rapid Rise/Fall Alarm	**PKAH/L**
Pressure Switch	**PS**
Pressure Switch High-high / High / Low / Low-low	**PSHH/H/L/LL**
Pressure Transmitter	**PT**
Pressure Transmitter Failure	**PAT**
Pump Monitor Relay	**YY**
Run Status	**YI**
Run Status Alarm (Part 3 digit 6: A-fail to start, B-fail to stop)	**YIA**
Run Time	**KQI**
Speed/Frequency Alarm High-high / High / Low / Low-low	**SAHH/H/L/LL**
Speed/Frequency Command	**SC**
Speed/Frequency Element	**SE**
Speed/Frequency Indication	**SI**
Speed/Frequency Switch Low	**SSL**
Temeprature Alarm High-high / High / Low / Low-low	**TAHH/H/L/LL**
Temperature element	**TE**
Temperature Indicating Transmitter	**TIT**
Temperature Indicator	**TI**
Temperature Switch High-high / High / Low / Low-low	**TSHH/H/L/LL**
Temperature Transmitter	**TT**
Temperature Transmitter Failure	**TAT**
Timer	**KY**
Torque Alarm High-high / High / Low-low / Low	**NAHH/H/L/LL**
Torque Indicating Transmitter	**NIT**
Torque Indication	**NI**
Torque Switch High-high / High / Low-low / Low	**NSHH/H/L/LL**
Torque Transmitter	**NT**
Torque Transmitter Failure	**NAT**
Vibration Alarm High-high / High / Low / Low-low	**VAHH/H/L/LL**
Vibration Element	**VE**
Vibration Indicating Transmitter	**VIT**
Vibration Indication	**VI**
Vibration Switch High-high / High / Low / Low-low	**VSHH/H/L/LL**
Vibration Transmitter	**VT**
Vibration Transmitter Failure	**VAT**
Voltage - Overvoltage Alarm high-high / high	**EAHH/H**
Voltage - Undervoltage Alarm low / low-low	**EALL/L**
Voltage Indication	**EI**

Table 2 - Instrument Technical Descriptor

Description of Technical Object	Technical Descriptor
Weight Element	**WE**

Table 2 - Control Equipment

Description of Technical Object	Technical Descriptor
Antenna	**IANT**
Application Server (FT Directory, WW GR, VantagePoint, …)	**IAPP**
Broadband Hardware	**IBB**
Communication Heartbeat Alarm	**IHBA**
Control Processor (centralized control over multiple processes)	**ICP**
Data Server	**IDAS**
Distributed Control Panel (centralized control over multiple proce	**IDCP**
Engineering Workstation	**IEWS**
Fiber Optic Panel	**IFOP**
Historian Server	**IHIS**
HMI Server	**IHMI**
Infrastructure Server (Terminal Server, Domain Server, File Server, Backup Server)	**IINF**
Local Control Panel (includes PLC and PLC IO panels that are not distributed control or master control)	**ILCP**
Local I/O Panel (remote IO enclosure for local PLC)	**ILIO**
Master Control Panel (controls multiple local control PLCs)	**IMCP**
Media Converter	**IMED**
Microwave Hardware	**IWAV**
Network Interface Panel	**INIP**
Network Router	**IRTR**
Network Security Hardware	**ISEC**
Network Switch	**ISWT**
Operator Interface terminal	**IOIT**
Operator Workstation	**IOWS**
PLC (local control PLC and racks)	**IPLC**
Power Supply	**IPS**
Printer	**IPRT**
RACO Alarm Hardware	**IRAC**
Remote I/O Panel (remote IO enclosure from CP)	**IRIO**
Remote I/O Rack (includes RIO for PLC or CP)	**IRIR**
Remote Terminal Unit Panel	**IRTU**
Scanner	**ISCN**
Thin Client	**ITC**
WIFI Hardware	**IWFI**

Table 3: Wastewater Treatment - Process/System Designation

Process Description	Process Designation
Preliminary - Overall System	00
Preliminary - Metering	01
Preliminary - Influent Pumping	02
Preliminary - Screening, Coarse	03
Preliminary - Grit Removal	04
Preliminary - Chemical Addition	06
Preliminary - Screening, Fine	07
Preliminary - Septage Receiving	08
Preliminary - Equalization/Overflow	09
Preliminary - Auxiliary	0X
Primary - Overall System	10
Primary - Metering	11
Primary - Clarifier	12
Primary - Sludge	13
Primary - Scum	14
Primary - Equalization/Overflow (Primary Effluent Overflow, Equalization, Emergency Storage and etc.)	15
	16
Primary - Auxiliary	1X
Secondary - Overall System	20
Secondary - Metering	21
Secondary - Primary Effluent Pumping	22
Secondary - Aeration Basin	23
Secondary - AB Blower and Air	24
Secondary - Clarifier	25
Secondary - Scum	26
Secondary - RAS	27
Secondary - WAS	28
Secondary - MLR	29
Secondary - Screening, Fine	2A
Secondary - Chemicals	2B
Secondary - MBR (Membranes, Filtrate, Backpulse, CIP)	2C
Secondary - MBR (Air Scour Blowers)	2D
Secondary - MBR (Chemicals)	2E
Secondary - Auxiliary	2X
Tertiary - Overall System	30
Tertiary - Coagulation/Flocculation	31
Tertiary - Filtration	32
Tertiary - Metering	33
Tertiary - Chlorination	34
Tertiary - Utility Water Pump Station	35
Tertiary - Flow Diversion	36

Table 3: Wastewater Treatment - Process/System Designation

Process Description	Process Designation
Tertiary - De-Chlorination	37
Tertiary - Effluent Metering	38
Tertiary - Ultra Violet Disinfection	39
Tertiary - Wetwell	3A
Tertiary - Chemicals	3B
Tertiary - Reverse Osmosis	3C
Tertiary - Advanced Oxidation Processes	3D
Tertiary - Recycled Water Reservoir/Tank	3E
Tertiary - Off-Spec & Overflow	3F
Tertiary - Auxiliary	3X
Solid Handling - Overall System	40
Solid Handling - Gravity Thickener	41
Solid Handling - Dissolved Air Flotation Thickener	42
Solid Handling - Rotary Drum Thickener	43
Solid Handling - Sludge Transfer	44
Solid Handling - Polymer Injection	45
Solid Handling - Filtrate, Sludge Thickening	46
Solid Handling - Digestion Acid Phase	47
Solid Handling - Digestion Acid Phase Heating	48
Solid Handling - Digestion Gas Phase	49
Solid Handling - Digestion Gas Phase Heating	4A
Solid Handling - Digester Gas (Storage, Treatment, & Flares)	4B
Solid Handling - Boilers	4C
Solid Handling - Dewatering	4D
Solid Handling - Filtrate, Dewatering	4E
Solid Handling - Centrate, Dewatering	4F
Solid Handling - Cake, Dewatering	4G
Solid Handling - Food Waste	4M
Solid Handling - Auxiliary	4X
Odor Control - Overall System	50
Odor Control - Preliminary	51
Odor Control - Primary	52
Odor Control - Secondary	53
Odor Control - Tertiary	54
Odor Control - Solids Handling	55
Power and Control - Overall System	60
Power and Control - Utility Power	61
Power and Control - Engine Generator	62
Power and Control - Wind Turbine	63
Power and Control - Solar	64
Power and Control - Battery	65
Power and Control - COGEN/REEP	66
Power and Control - Fuel Cell	67

Table 3: Wastewater Treatment - Process/System Designation

Process Description	Process Designation
Support Facilities - Plant Wide	70
Support Facilities - Operations	71
Support Facilities - Maintenance	72
Support Facilities - Warehouse	73
Support Facilities - Guard Shack / Trailers	74
Support Facilities - Pilot testing	75
Utilities - Natural Gas	80
Utilities - Potable Water	81
Utilities - Fire Water	82
Utilities - Utility Water	83
Utilities - Telecommunications	84
Utilities - Storm Water	85
Utilities - Compressed Air System	86
Utilities - Other	8Z

Smart Tag for SCADA Panel Instructions / Examples

Smart Tag for SCADA Panels shall follow the Smart Tag Guideline.
In addition, some specific instruction is given here in this document for how to apply "Part 3" of the Smart Tag

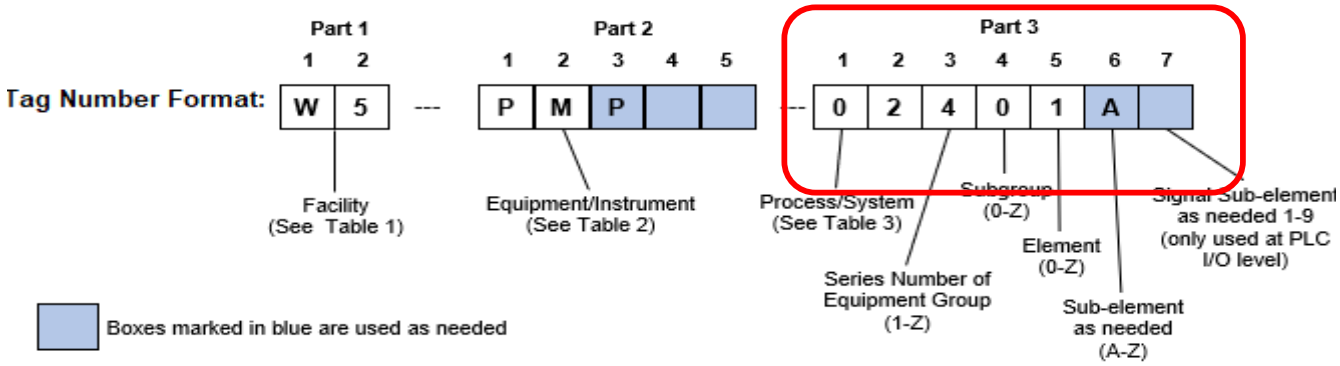

Part 3: Process/System, Series, Element

Digits 1-2: Process/System - use table 3 and select the related process/system

Digit 3: Series Number should be 0
(indicates item applies to the entire process/system and not tied to a specific group or subset within the process/system)

Digit 4: Subroup should be associated power center number.
(power centers will be considered main hubs. If a panel is not in a power center, consider the closest power center that is related, e.g. network connections)

Digit 5: Element number - Panel number within the subgroup (Power Center).

Examples:

1 Remote IO Panel for Prelim/Primary in RP-5 Power Center 9
Familiar Name: RIO-9-1
Smart Tag: W5-IRIO-10091
W5 = Facility RP-5
IRIO = Remote IO Panel
10 = Primary (although applies to Prelim & Pri, Primary was chosen, since PLC name is PRI)
0 = Series number indicating applicable to the overall system
9 = Power center number
1 = 1st SCADA panel in power center 9

2 Control Panel housing redundant PLCs for solids section in RP-5 Power Center 7
Familiar Name: DCP-7-1
Smart Tag: W5-IDCP-40071
W5 = Facility RP-5
IDCP = Distributed Control Panel (centraoliaced control over multiple processes)
40 = Solid Handling
0 = Series number indicating applicable to the overall system
7 = Power center number
1 = 1st SCADA panel in Power Center 7

Inland Empire Utilities Agency
A MUNICIPAL WATER DISTRICT

Section 4-Electrical and I&C-Appendices

iii SCADA Standards

PROCESS AUTOMATION CONTROLLER PROGRAMMING STANDARDS
HIGH PERFORMANCE HMI PROGRAMMING STANDARDS
APPENDIX B - ALARM MANAGEMENT STANDARD
APPENDIX C - HMI STYLE GUIDE
APPENDIX D - SAMPLE DISPLAYS
APPENDIX E - HMI GROUPS AND SECURITY CODES
APPENDIX F - IO LOOP TEST FORM
APPENDIX G- DEVICE TEST FORM
APPENDIX H- LOGIC TEST FORM

AVAD ENGINEERING

iii SCADA Standards

SCADA

STANDARDS

INLAND EMPIRE UTILITIES AGENCY

UPDATED OCTOBER 2019

Prepared by the

INLAND EMPIRE UTILITIES AGENCY

In collaboration with

WESTIN ENGINEERING, INC. & EMA, INC.

Table of Contents

Process Automation Controller Programming Standards 1

SECTION 1 INTRODUCTION 3

1.1 Purpose 3
1.2 Scope 3

SECTION 2 DEFINITIONS 4

2.1 Definitions 4

SECTION 3 General Requirements 5

3.1 Reference Documentation 5
3.2 Programming Environment 6
3.3 Hardware Firmware 6
3.4 Version Compatibility Check 6
3.5 Ownership 6

SECTION 4 Process Control Overview 7

4.1 Control Modes 7
4.2 Bumpless Transfer 7
4.3 Alarms 8
4.4 Duty Sequence 8
4.5 HMI Graphic Screens 8
4.6 Security 8

SECTION 5 GENERAL CONFIGURATION 9

5.1 General Requirements 9
5.2 PAC to PAC Communications Requirements 9
5.3 Input and Output Requirements 10
5.4 Program Structure 11
5.5 User Defined Data Types 11
5.6 Developed Add On Instructions 12
5.7 Integrated Architecture Builder (IAB) 13
5.8 FactoryTalk AssetCentre 14

SECTION 6 DOCUMENTATION REQUIREMENTS 15

6.1 General 15
6.2 Submittals 15
6.3 Program File Naming Convention 16

SECTION 7 Process Library 18

7.1 PlantPAx Usage and Exceptions 18
7.2 System Configuration Tools 18
7.2.1 PlantPAx Online Configuration Tool 18
7.3 Process Library Usage 19
7.4 Add-On Instruction Documentation 21

SECTION 8 SCADA Software Development and Testing 29

8.1 Overview 29
8.2 Functional Definition 30
8.3 Contractor Bench Test (CBT) 31

8.4 Software Factory Acceptance Test (FAT, Witnessed) 31
8.5 Training and Transition Plan 32
8.6 Software Site Acceptance Test (SAT) 33
8.7 Operational Performance Test (OPT) 34
8.8 As-Built Documentation 34
8.9 Warranty Period 34
..... 36
High-Performance Human Machine Interface 36
(HMI) Programming Standards 36
SECTION 1 Introduction 38
1.1 Purpose 38
1.2 Scope 38
1.3 Glossary 38
SECTION 2 Reference Documents 40
SECTION 3 General Configuration 41
3.1 HMI Programming Environment 41
3.1.1 Software Versions and Upgrades 41
3.1.2 Software Patches 41
3.1.3 Version Compatibility 41
3.2 Development Workshops 42
3.2.1 Graphics 42
3.2.2 Alarming 42
3.2.3 VantagePoint and OSISoft PI 42
3.2.4 Database and Reporting 42
3.2.5 Archival and Retrieval of Information 43
3.3 FactoryTalkView SE 43
3.4 FactoryTalkView Alarm and Events 44
3.5 Win-911 Alarm Notification 44
3.6 RACO Backup Alarm Notification 44
3.7 ThinManager 44
3.8 FactoryTalk Historian 44
3.9 FactoryTalk VantagePoint 45
3.10 OSISoft Enterprise PI System 45
3.11 Server Requirements 45
3.12 Operator Workstation Requirements 46
SECTION 4 HMI Design Philosophy 47
4.1 Principles and Attributes 47
4.2 Hierarchy 48
4.2.1 Level 0 Display 50
4.2.2 Level 1 Displays 51
4.2.3 Level 2 Displays 52
4.2.4 Level 3 Displays 53
4.2.5 Level 4 Displays 54
4.2.6 Control Faceplates 55
4.3 Navigation 56
4.3.1 Navigation Targets 57

4.4 Layout ... 58
4.4.1 Control Room Console Layout ... 58
4.4.2 Process Display Layout ... 59
4.5 Display Characteristics ... 60
4.5.1 Use of Color ... 60
4.5.2 Lines, Vessels, and Static Equipment ... 61
4.5.3 Text ... 62
4.5.4 Values ... 62
4.5.5 Analog Indicators ... 63
4.5.6 Objects and Symbols ... 64
4.5.7 Controllers ... 65
4.6 Alarms ... 66
4.6.1 Alarm Behaviors and Indications ... 66
4.6.2 Graphic Display Indication Methods ... 67
4.6.3 Alarm Summary Display ... 68
4.6.4 Alarm History Display ... 70
4.6.5 Alarm Management Functions ... 70
4.7 Trending ... 71
4.7.1 Historical Embedded Trends ... 72
4.7.2 VantagePoint Embedded Trend ... 72
4.7.3 Real-time Embedded Trends ... 72
4.8 Security ... 72
4.9 System Configuration Tools ... 73
4.9.1 PlantPAx Online Configuration Tool ... 73
4.9.2 PlantPAx Alarms Builder ... 73
4.9.3 PlantPAx Color Change Utility ... 74
SECTION 5 Deliverable ... 75
5.1 Submittals ... 75
APPENDIX B ... 76
Alarm Management Standard ... 76
SECTION 1 INTRODUCTION ... 78
1.1 Purpose ... 78
1.2 Scope ... 78
1.3 PAC and HMI Programming Environment ... 78
1.4 ALARM & EVENT DEFINITIONS ... 78
1.4.1 Alarm Definition ... 78
1.4.2 Event Definition ... 78
1.4.3 Alarm Reset Definition ... 79
1.4.4 Alarm Acknowledge Definition ... 79
1.4.5 Alarm Shelving Definition ... 79
1.4.6 Alarm/Event Area Definition ... 80
1.4.7 Alarm Filter Definition ... 80
1.5 ALARM AND EVENT METHODOLOGY ... 80
1.5.1 General ... 80
1.5.2 PCN Documentation ... 81
1.5.3 Alarm Prioritization ... 81
1.5.3.1 Priority 1 ... 81

1.5.3.2 Priority 2 81
1.5.3.3 Priority 3 82
1.5.3.4 Priority 4 82
1.5.4 Alarm Annunciation 82
1.5.5 Alarm/Event Color Schemes 82
1.5.6 Nuisance Alarm Suppression 83
1.5.6.1 Low Pass Filter 83
1.5.6.2 Analog Alarm Hysteresis 83
1.5.6.3 Transient Suppression 83
1.5.6.4 Analog Debounce Timer 83
1.5.6.5 Digital Debounce Timer 84
1.5.6.6 Alarm Suppression 84
1.5.6.7 Alarms created during routine Maintenance 84
1.5.6.8 Alarm Shelving 84
1.5.6.9 Instrument Failure Enable/Disable 85
1.5.6.10 Disabling Alarms 85
1.6 ALARM & EVENT TYPES 86
1.6.1 General 86
1.6.2 Signal Error Alarms 86
1.6.2.1 Input Failure alarm 86
1.6.3 Rate of Change Alarms 86
1.6.3.1 Rate of Change High Alarm (RCH): 86
1.6.3.2 Rate of Change Low Alarm (RCL): 86
1.6.4 Threshold Alarms 87
1.6.4.1 HIHI Alarm 87
1.6.4.2 HI Alarm 87
1.6.4.3 LO Alarm 87
1.6.4.4 LOLO Alarm 87
1.6.5 Discrete Alarms 87
1.6.6 Virtual Alarms 88
1.6.6.1 Failed to Start Alarm 88
1.6.6.2 Failed to Stop Alarm 88
1.6.6.3 Valve Full Stall Alarm 88
1.6.6.4 Valve Transit Stall Alarm 88
1.6.6.5 Valve Fault Alarm for Control Valves 88
1.6.7 Smart Device - Alarms 89
1.6.8 Device Events 89
1.6.8.1 Maintenance Mode and Operator Mode 89
1.6.8.2 Out of Service 89
1.6.8.3 Hand/Auto or Local/Remote 89
1.6.8.4 Device Run 90
1.6.8.5 Open/Close 90
1.6.8.6 Speed/Position Status 90
1.6.8.7 Speed/Position Setpoint 90
1.6.9 PAC and Remote Racks 90
1.6.9.1 PAC Run Status 90
1.6.9.2 PAC Program Watchdog Fault 90
1.6.9.3 PAC Fault 91
1.6.9.4 Communications Card Fault 91

1.6.9.5 I/O Communications Fault 91
1.6.9.6 General I/O Fault 91
1.6.9.7 Redundancy Failover Fault 91
1.6.9.8 Redundancy Available Status 91
1.6.9.9 Power Supply Alarm 91
1.6.10 Communication Alarms/Events 91
1.6.10.1 HMI Server to PAC Communication Alarm 91
1.6.10.2 PAC-to-PAC Communication Alarm 92
1.6.10.3 Ethernet/TCP Alarm 92
1.6.10.4 PAC to HMI Server Communication Fault 92
1.6.10.5 Non-Ethernet Communications 92
1.6.11 Server Alarms 92
1.6.11.1 Primary Server Not Active Alarm 92
1.6.11.2 Historian Collector Failed Alarm 93
1.6.11.3 Remote Notification Software 93
1.7 EQUIPMENT ALARM HANDLING 93
1.7.1 Modes of Control 93
1.7.2 Health and Safety and Equipment Protection Alarms 93
1.7.3 Device Interlock Alarms 94
1.7.4 Redundant Instruments and Alarming 94
APPENDIX C 95
HMI STYLE GUIDE 95
A.1 Color Usage 96
A.2 Text 101
APPENDIX D 102
SAMPLE DISPLAYS 102
G.1 Level 1 Display 103
G.2 Level 2 Display 104
G.3 Level 3 Display 104
G.4 Application Header and Navigation Bar 105
G.5 Alarm Summary 105
APPENDIX E 106
HMI GROUPS AND SECURITY CODES 106
APPENDIX F 108
IO LOOP TEST FORM 108
Test Preparation 109
ON-Site Panel Inspection Check List 111
I/O Check 112
Instrumentation Calibration Sheets 114
POST-Test Review 115
APPENDIX G 117
DEVICE TEST FORM 117

Check HOW THESE FORMS RELATE TO FORMS IN CIPO TO AVOID CONFLICTS

1.0 Test Preparation 118
2.0 Panel Inspection Check List 119
3.0 Loop and Tag Check 123
4.0 POST-Test Review 125
APPENDIX H 127
LOGIC TEST FORM 127
1.0 FAT Test Preparation 128
2.0 Test Methodology 129
2.1 Constant Speed Pump/Motor Test Procedure 129
2.2 VFD Pumps Test Procedure 130
2.3 Discrete Valve Test Procedure 132
2.4 Modulating Valve Test Procedure 134
2.5 Miscellaneous I/O 136
2.6 Analog Alarms 136
2.6.1 Analog Level Alarming 136
2.6.2 Analog Alarm Enable/Disables 137
3.0 Device Test Summary Tables 139
3.1 Constant Speed Pump/Motor Test Summary Table 139
3.2 Variable Speed Pump/Motor Test Summary Table 140
3.3 Discrete (Open/Close) Valve/Device Test Summary Table 141
3.4 Modulating (Analog) Valve/Device Test Summary Table 142
3.5 Miscellaneous I/O Test Summary Table 142
3.6 Analog Alarms 143
4.0 AUTOMATIC SETPOINTS Test Summary Table 144
5.0 AUTOMATIC PROGRAM FUNCTION TEST SUMMARY TABLE 145
6.0 POST-Test Review 148

Inland Empire Utilities Agency
A MUNICIPAL WATER DISTRICT

Section 4-Electrical and I&C-Appendices

iii SCADA Standards

PROCESS AUTOMATION CONTROLLER
PROGRAMMING STANDARDS

PROCESS AUTOMATION CONTROLLER PROGRAMMING STANDARDS

Inland Empire Utilities Agency

A MUNICIPAL WATER DISTRICT

PROCESS AUTOMATION CONTROLLER PROGRAMMING STANDARDS

REVISION HISTORY

REV	DATE	COMMENTS
0	11/15/2010	ORIGINAL ISSUE
1	1/10/2011	SECOND ISSUE
2	5/27/2011	THIRD ISSUE
3	3/2/2012	FOURTH ISSUE
4	4/9/2012	FIFTH ISSUE
5	5/1/2012	SIXTH ISSUE
6	2/28/2014	MODIFIED TO INTEGRATE UPDATED RA PLANTPAX STANDARDS
7	7/15/2014	ADDITIONAL PLANTPAX STANDARDS ADDED
8	8/19/2016	REVISED BASED ON THE COMMENTS AND LESSON LEARNED FROM CCWRF
9	11/22/2016	REVISED BASED ON THE COMMENTS AND LESSON LEARNED FROM CCWRF
10	3/9/2017	ISS REVISED COMMENTS
11	3/16/17	ISS FINAL COMMENTS
12	9/27/17	REVISED APPENDIX A: TAGGING REQUIREMENTS
13	10/16/17	REVISED APPENDIX A: TAGGING REQUIREMENTS
14	10/26/17	REVISED APPENDIX A: TAGGING REQUIREMENTS
15	12/5/17	REVISED APPENDIX A: TAGGING REQUIREMENTS
16	1/11/18	REVISED APPENDIX A: TAGGING REQUIREMENTS (ADDED PV AND CV TO TABLE 5)
17	1/23/18	REVISED APPENDIX A: TAGGING REQUIREMENTS (ADDED PNL TO TABLE 2 AND PANEL TYPES TO TABLE 5)
18	6/28/18	REVISED APPENDIX A: TAGGING REQUIREMENTS (ADDED VIT, SOL, INV, TSHH/H/L/LL, FVS TO TABLE 2. ADDED MILS-AU, IPS-AV TO TABLE 5 UNITS)
19	5/23/19	REMOVED APPENDIX A FROM THIS DOCUMENT. TAGGING STANDARDS WILL BE IN A SEPARATE DOCUMENT.
20	10/10/19	ISS UPDATES

SECTION 1

INTRODUCTION

1.1 PURPOSE

The Inland Empire Utilities Agency has developed standard programming methods for use with the Agency's water, wastewater, and industrial facilities. The standards are to be used by IEUA staff, consultants, and programmers working within the Agency so as to maintain a consistent approach to programming and a single standardized approach to Supervisory Control and Data Acquisition (SCADA) system implementation.

In order to ensure consistency between the Programmable Automation Controller (PAC) and Human Machine Interface (HMI) development, which may from time to time be completed by different consultants for a given project or as components of different projects, it is imperative that the standards be followed.

This approach will make the following possible:

- Maintain consistent PAC project structure
- Provide for modular program structure
- Provide for reusable instructions and routines
- Uniform handling of alarms
- Facilitate ease of trouble-shooting
- Minimize personnel training

1.2 SCOPE

This PAC Standard applies to all projects incorporating process control in the water, wastewater, and industrial SCADA systems. This includes any project incorporating a Programmable Automation Controller (PAC) regardless of whether the controller is installed as a stand-alone unit or connected to the wider SCADA network. This standard shall be used as guidance for new or retrofit facility designs conducted by or for IEUA.

SECTION 2

DEFINITIONS

2.1 DEFINITIONS

The following defintions and abbreviations have been provided here for the reader's convenience.

IEUA	Inland Empire Utilities Agency.
Agency	Refers to IEUA or their assigned representative of IEUA.
Contractor	The prime contractor that is directly contracted with IEUA for the delivery of the SCADA system and software.
AOI	Add On Instruction. A standard block of logic code within the PAC.
JSR	Jump To Subroutine. An instruction within the PAC to change between program routines.
PAC	Programmable Automation Controller.
PlantPAx	A Rockwell Automation environment that offers process and batch control users a new library of reusable control objects with tools to simplify its deployment
SCADA	Supervisory Control And Data Acquisition. A system which monitors and controls process systems from a remote location and collects historical data on those field processes.
UDT	User Defined Data Type. This is a tag structure in the PAC used to group tags together.

SECTION 3

GENERAL REQUIREMENTS

3.1 REFERENCE DOCUMENTATION

The following documents shall be used as reference material within this standard.

"*PlantPAx Process Automation System*"	Document referencing the architecture and configuration of the PlantPAx system Rockwell Automation Publication PROCES-RM001H-EN-P
"*PlantPAx Library of Process Objects*"	Document referencing the library and program configuration requirements and the specific library objects included within the PlantPAx library Rockwell Automation Publication PROCES-RM002B-EN-P
"*Logix5000 Controllers General instructions Reference Manual*"	Document detailing the instruction base within the Logix5000 PAC's Rockwell Automation Publication 1756-RM0030-EN-P
"*Logix5000 Controllers Advanced Process Control and Drives Instructions*"	Document detailing the advanced process control instruction base within Logix5000 PACs Rockwell Automation Publication 1756-RM006G-EN-P
"*Rockwell Knowledgebase Article 62682*"	PlantPAx Process Library Template
"*Rockwell Automation Library of Process Objects: Logic Instructions*"	Reference manual for PlantPAx Add-On Instructions that comprise the Rockwell Automation Library of Process Objects.
"*Rockwell Automation Library of Process Objects: Display Elements*"	Reference manual for visualization files, display elements, global objects and HMI Information.
IEUA High Performance HMI Programming Standards	Document standardizing the HMI architecture, configuration, and programming.
IEUA Alarm Management Standards	Document standardizing the alarm and monitoring requirements within the IEUA system.
IEUA Tagging Standard	Document providing the standard notations for all tagging within the IEUA system.
IEUA Historian Tag Configuration Guideline	Document providing the type of points that are expected to be historized as well as the configuration parameters of each type

See appropriate sections of these SCADA Standards.

	of point.
IEUA Master I/O List??	
IEUA Control Panel Power Distribution Example?	Sample Drawing of Control Panel Power Distribution
IEUA Control Schematic Example?	Sample control schematic drawings for VFDs and E300s along with document detailing general guidelines for hardwired vs ethernet signals for MCCs and VFDs.
IEUA Control Panel I/O Wiring Diagram Sample?	Sample drawing format for Control Panel I/O Wiring…?

3.2 PROGRAMMING ENVIRONMENT

IEUA utilizes the Rockwell Automation's PlantPAx software suite. This suite consists of using specific PAC programming structure and AOI's as well as corresponding HMI system architecture and object libraries.

All PAC programming shall be updated using the current IEUA PlantPAx Library level and the compatible version of Studio 5000 that supports redundancy. The integrator shall confirm the specific versions from IEUA prior to starting work.

3.3 HARDWARE FIRMWARE

The firmware release for each project will be defined by IEUA at the beginning of the project. The integrator is responsible for flashing the hardware to the required firmware release.

3.4 VERSION COMPATIBILITY CHECK

The integrator shall verify that all the different features and capabilities between different series of products and associated firmware versions are compatible. It is the responsibility of the integrator to notify IEUA of any compatibility issues in a timely manner.

3.5 OWNERSHIP

All PAC programming/code becomes the property of the Inland Empire Utilities Agency at the point of successful commissioning of the work. The programmer/system integrator/contractor/consultant is to turn over all PAC programs/codes to IEUA with no copyrights, restrictions, or limitations and must not be locked down in anyway such as by password and all program comments must remain present.

All AOI's used or created within the IEUA system shall become property of IEUA and shall be turned over in the original source code form without any copyrights, restrictions, or limitations and must not be locked down in anyway such as by password.

SECTION 4

PROCESS CONTROL OVERVIEW

4.1 CONTROL MODES

The following table defines the control modes employed by IEUA to operate their facilities:

- HOA (HAND-OFF-AUTO): The HOA is a field mounted selector switch that enables the Operator to select the equipment control mode. “HAND” is translated to “LOCAL” and “AUTO” is translated to “REMOTE”.
- AM (AUTO-MANUAL): The AM is a virtual selection buttons incorporated into equipment control pop-ups on the HMI. Rockwell PlantPAx uses the modes OPERATOR for Manual and PROGRAM for Automatic.

Table 1 Control Modes

Field	HMI Selection	Control Mode	DESCRIPTION
HOA = OFF	N/A	Out of Service (OOS)	Equipment is not available to the SCADA or the Operator for control of the process.
HOA = HAND	N/A	HAND	In HAND MODE the device is controlled by the Operator through field-mounted pushbuttons and selector switches, which are electrically hardwired to the controlled equipment. The equipment continues to be monitored by SCADA but is not available to be controlled by SCADA.
HOA = AUTO	OPERATOR (AM = MANUAL)	OPERATOR MODE	In OPERATOR MODE the device will be controlled by the Operator through virtual pushbuttons provided by the HMI.
HOA = AUTO	PROGRAM (AM = AUTO)	PROGRAM MODE	In PROGRAM MODE the device will be controlled by automatic logic executed by a PAC processor. The Operator may modify control variables and set points through the HMI to adjust the control of the process.

4.2 BUMPLESS TRANSFER

A bumpless transfer means that if that specific device was running when the mode of operation was changed then the device will continue to run without requiring a re-start.

To avoid sudden and unexpected changes in state, when switching from HAND to REMOTE the

equipment will default to PROGRAM MODE.

To avoid sudden and unexpected changes in state, when switching from PROGRAM MODE to OPERATOR MODE the equipment will remain in its current operational state.

Switching from OPERATOR MODE to PROGRAM MODE may cause the equipment to change state since the equipment is now under the automatic control of the PAC program.

4.3 ALARMS

Alarms handling is defined in the Agency's "Alarm Management Standard". See Appendix B - Alarm Management Standard

4.4 DUTY SEQUENCE

In specific process areas, multiple pumps and devices may exist providing additional capacity and redundancy in their control. In such instances, a duty sequence shall be established for these devices to provide a sequence for starting and stopping, a means to provide even runtime on equipment, and also a response to failure of this equipment. Various sections of the narrative go into the details and specifics as to how the equipment will operate within the duty sequence. The typical sequences experienced are Duty & Standby or Lead & Lag. An example of Duty & Standby would be sump pumps. An example of Lead & Lag would be the tertiary chemical feed pumps.

Duty Rotation

Under normal operating conditions, a set of buttons will be manually adjusted by the operator to set the duty of a designated device. Automatic duty rotation is also available for some process equipment. Typically, for automatic rotation to occur, operators must have enabled the feature to rotate the sequence automatically. Automatic duty rotation shall be provided with manual override. Various sections of the narrative provide the details as to how the specific duty sequences are to rotate. (using PlantPAx P_LLS AOI block)

Device is Not Available

Depending on the process, if a device in a duty sequence is not available for automatic control then it will be taken out of the duty sequence or passed over in favor of the next duty device. When the device becomes available for automatic control it will return to duty as the lowest priority duty device.

4.5 HMI GRAPHIC SCREENS

Refer to the latest version of IEUA High Performance HMI Standard.

4.6 SECURITY

Security is defined in the Agency's "High Performance HMI Standard".

SECTION 5

GENERAL CONFIGURATION

5.1 GENERAL REQUIREMENTS

The following general requirements shall be made within the PAC program development:

- Indirect addressing of variables are not to be used, unless specifically required to simplify logic and must be approved by IEUA.
- Coils(OTL/OTU/OTE) must not be called more than once within the entire program, unless approved by IEUA.The use of latching coils (OTL/OTU) should be avoided and only used where necessary.
- All tagging within the PAC shall utilize the IEUA tagging standard. Integrator shall verify tagging standards are up to date.
- All tags and tag descriptions must be submitted to IEUA prior to the scheduling of the FAT for review and approval.
- All module notations shall be submitted to IEUA for review and approval prior to scheduling the FAT.
- All logics and tags shall be fully documented for reference and troubleshooting.
- All programming is to follow Rockwell best practices, unless otherwise specified below.

5.2 PAC TO PAC COMMUNICATIONS REQUIREMENTS

Produced and consumed messaging is the preferred communication method between more than two PACs and shall be limited and configured to the following requirements:

- Requires ControlLogix or CompactLogix controllers
- Limited to 500 bytes over the backplane and 480 bytes over a network
- Shall be used when multiple consumers require the same data from a single source
- Produced and consumed tags shall be grouped into user-defined structure to reduce the number of connections to the controller
- PAC to PAC communications are to be monitored and communication alarming installed should the PACs fail to communicate.

Direct messaging is the preferred communication method between single controllers and shall be limited and configured to the following requirements:

- Shall be initiated within a dedicated periodic task
- Programmatically initiated

- Use DINT's when possible
- Unless when using messaging for setpoints, always use message reads, not message writes.
- Multiple messages shall be executed sequentially and under a single routine for each communication port.
- Time-to-live (TTL) timer will determine when a message instruction fails and shall advance to the next message instruction.

All PAC to PAC and messaging communications shall be monitored and alarming installed for communications failure. All PAC to PAC and messaging communications alarms shall be annunciated to the HMI.

  - Messaging communications shall be monitored from a "heartbeat" from each controller. Each "heartbeat" signal is a counter that increases by one unit each second. When the communication with a PLC is lost, the PLC that is monitoring the "heartbeat" counter detects that the value of the counter has not changed for a pre-set time, for example after 5 seconds, and alarms. When the counter reaches 10,000 it restarts counting from zero.

If communications fails for critical interlocks or controls signals, the device shall be placed into a safe state; typically off for a motor, closed for a valve, etc. Unless specifically stated in PCN to disregard or modify.

5.3 INPUT AND OUTPUT REQUIREMENTS

The following requirements shall be made in regards to the input and output cards and signals within the PAC program development:

- All input and output signals shall be buffered into REAL arrays (for analog signals) or DINT arrays (for digital signals).
  - Digital signals can be moved into the array, using "masked move" (MVM), for ease of startup.
  - The local I/O tag is not to be used within the program, other than moving it into the buffer array.
  - Naming of I/O modules in the I/O configuration tree of the controller organizer should follow general naming convention of I/O Type_Location_Rack_Slot, e.g. e.g. "DI_HW_R1_S1"
  - Naming of buffer arrays should follow general naming convention of I/O Type_Location_Rack_Slot_Data, e.g. "DI_HW_R1_S1_Data"
- All input and output signal conditioning and alarming shall be done at the program level within the AOI. All analog scaling at the card shall be 0.00-20.00 EU.

- All input and output cards shall be monitored using PlantPAx monitoring blocks. This will notify SCADA when there is any problem with an I/O module or channel.

5.4 PROGRAM STRUCTURE

The integrator shall use the PlantPAx base library of the version defined at the beginning of the project. The integrator shall only include the PlantPAx objects that will be used in the project. The integrator shall request the current IEUA AOI library at the beginning of the project.

The following requirements shall be followed within the PAC program structure:

- All tasks shall be of periodic type, no continuous tasks are to be used within the program
- All tasks shall be labeled with the periodic scan rate
    - For Example:
        - 500 ms scan rate shall be “Task_C_500ms”
        - 750 ms scan rate shall be “Task_D_750ms”
- A dedicated task shall be created to monitor the controller and all the other tasks within the PAC
- In general, there should be a program for each equipment, labeled by the equipment/instrument tag number. Routine labels within this program shall begin with the equipment tag number appended by routine type.
- All PID Loops shall be placed into a periodic task with a scan time no greater than 50% of the PID scan time.
- Explicit Messaging shall be placed into separate, dedicated periodic tasks
- All Explicit Messages for a specific port shall trigger and execute sequentially per IEUA standard explicit messaging (sample messaging routine will be provided by IEUA)..
- All unused tasks and tags within the program shall be deleted
- Reference the Sample IEUA program file for an example of how to configure the Controller Organizer and the Logical Organizer and follow the general format structure from the sample program.

5.5 USER DEFINED DATA TYPES

The User Defined data type (UDT) is a custom data type created by the user and approved by IEUA. The UDT can be thought of as a container or collection of data types referred to as members. Every member of a UDT is itself another data type, Predefined, String, or another UDT. The entire collection is then identified as a single data type. When a controller scoped tag is created by the user, the user must give the new tag a data type. When a tag is created and

assigned a UDT as its type, memory is allocated for the base tag, and all of its corresponding members. Every member of a tag's UDT structure is accessed using the dot "." character.

All UDTs shall be approved by IEUA prior to implementation.

All tags within UDTs shall be grouped by same datatype; i.e. BOOL with BOOL, DINT with DINT, REAL with REAL, etc.

All tags within each UDT shall have a specific description describing the function of the tag.

5.6 DEVELOPED ADD ON INSTRUCTIONS

The user developed Add On Instructions (AOI) are custom logic blocks created by the user. An AOI can be thought of as a container or collection of logic that can be reused under a single unique tag and data type. Every member of an AOI is itself another data type, Predefined, String, or another UDT/AOI. The entire collection is then identified as a single unique data type. When a controller scoped tag is created by the user, the user must give the new tag a data type. When the AOI is created the assigned tag is the Add On data type, memory is allocated for the base tag, and all of its corresponding members. Every member of a tag's structure is accessed using the dot "." character.

All AOIs shall be submitted to and approved by IEUA prior to implementation.

All AOIs shall be fully documented.

All developed and approved AOIs must have a "U_..." prefix in their name.

The following process shall be followed when creating a specific AOI block:

1. The integrator must create a narrative describing the AOI blocks purpose and function and facilitate one preliminary workshop with IEUA to discuss the AOI block
2. The integrator must program the AOI block and test the AOI block in a controlled, non-live environment and document the testing
3. The integrator shall document the AOI block following the documentation found in the Add-On Instruction Documentation section.
4. The integrator is responsible for facilitating one following workshop with IEUA to reviewing the final documentation and AOI function.

Within each custom AOI, the following prefix format shall be followed for the tag names:

- Input data elements (Inp_) are typically used to connect field inputs from I/O modules or signals from other objects.
- Output data elements (Out_) are typically used to connect field outputs from I/O

modules or signals from other objects.

- Input/Output data elements (IO_) are typically used to connect combined field input and output signals from I/O modules or signals from other objects.
- Configuration data elements (Cfg_) are used to set configurable capabilities and features of the instruction.
- Commands (PCmd_, OCmd_, MCmd_) are issued by program logic, operators, and maintenance personnel to request instruction actions.
- Settings (PSet_, OSet_, MSet_) are used by program logic, operator, and maintenance personnel to establish runtime setpoints, thresholds, and so forth. A Setting (Set_ without a leading P, O, or M) establishes runtime settings regardless of the role or mode.
- Value data elements (Val_) are numeric outputs of the instruction for use by the HMI. Values also can be used by other application logic or software packages.
- Status data elements (Sts_) are bit outputs of the instruction for use by the HMI. Status bits also can be used by other application logic.
- Ready data elements (Rdy_) are bit outputs of the instruction used by the HMI to enable or disable Command buttons and Setting entry fields.

All tags within each AOI shall have a specific description describing the function of the tag in relation to the Add On Instruction.

5.7 INTEGRATED ARCHITECTURE BUILDER (IAB)

IEUA utilizes Integrated Architecture Builder for the organization and structure of the system level visualization and configuration of the Logix components. As modifications, additions, and/or removals are made to any of the configurations of the PAC hardware or associated configuration software, the corresponding IAB changes shall be made in direct context.

The PlantPAx System Estimator tool (PSE) in the IAB software must be utilized for proper PlantPAx sizing. If IEUA has a base IAB file for the existing facility, the systems integrator will build off of that file and submit the IAB/PSE to Rockwell commercial engineering and IEUA for review and approval prior to FAT. A final as-built copy of the IAB/PSE is to be submitted at project completion. If a base IAB file does not exist, then the systems integrator is to build the IAB, including the PSE and submit the file to Rockwell commercial engineering and IEUA for review and approval prior to FAT. A final as-built copy of the IAB/PSE is to be submitted at project completion.

5.8 FACTORYTALK ASSETCENTRE

IEUA utilizes FactoryTalk AssetCentre as a tool for centralized management for securing, managing, versioning, tracing, and reporting automation related asset information throughout the enterprise. As related to the PAC architecture, all PAC programs and files shall be checked in and checked out using the source control feature requirements set forth within FactoryTalk AssetCentre.

The following procedure shall be followed for each PAC program:

1. At the beginning of the contract, the consultant shall request sample PlantPAx PAC program file or the existing PAC program file as applicable to be used from IEUA.
2. After the program has been implemented (downloaded and affecting the process), the controller security will be enabled and the program will be checked in to AssetCentre.
3. If IEUA makes any modification to a provided program that the integrator is using for development, IEUA will document the changes made and present them to the integrator along with the updated program file. The integrator will be responsible for making the changes within the program.

During onsite commissioning, the integrator shall check out the program from AssetCentre as needed, and check in the program to AssetCentre at the end of each working shift of each day.

Note: Each project needs to consider how many additional assets will be added and purchase additional asset licenses for FactoryTalk AssetCentre. Assets include all PLCs, VFDs, Motor Electronic Overload Relays, and Operator Interface Terminals (OIT) (PanelView).

SECTION 6

DOCUMENTATION REQUIREMENTS

6.1 GENERAL

Proper program documentation for the developed software project is required. A program that has not been properly documented shall be considered incomplete. Programs shall be deemed well-documented only if these project documentation guidelines are implemented:

- All supplied documentation shall be grammatically correct and in the English language.
- All routines shall be assigned a written description statement detailing the purpose of the routine.
- All function block routine sheets require a detailed descriptor header associated with the PAC logic contained within the sheet
- Detailed rung and logic comments must be provided to allow for the SCADA group to adequately troubleshoot PAC logic. Comments should not be general and should document the entire rung's logic.
- All tags shall be correctly assigned using the IEUA tagging standard. Each tag, including tags residing within AOI or UDT's shall be documented with an appropriate, concise description using consistent terminology. Acronyms and abbreviations shall be avoided in the description. This will not apply to tags used in generic logic for simple logic functions such as OSRs that do not interface with any other logic functions or displays.
- The PAC Controller name shall be approved by IEUA.
- All unused code and tags shall be removed from the final program.

Verify Technical Specifications for each Project. These Submittals must be included.

6.2 SUBMITTALS

The following submittals shall be made to IEUA by the application developer:

- Two soft copies of all developed software and documentation shall be submitted at the end of each SCADA design stage (25%, 50%, 75%, final as-built version).
    - IEUA Standard Master I/O List
    - PLC programming files (ACD file) and documentation, including the PlantPAx Online configuration tool spreadsheet and AOI documentation.
    - Custom configuration of any modules, e.g. (prosoft modules etc…)
    - Documentation of data mapping (spreadsheets)
    - VFD configuration files and documentation
    - Ethernet Switch configuration files and documentation
- FAT, loop checks, and SAT forms Coordinate with CIPO FAT and Startup Forms

  - Submitted prior to FAT/SAT/loop check
  - Signed documentation submitted after testing is complete
- IAB/PSE
  - approved by Rockwell commercial engineering before programming work
  - as-built file at the end of the project.
- Training Documents for Operations, Maintenance, and SCADA staff.
- As-built PCNs and drawings (CAD files and PDFs)

6.3 PROGRAM FILE NAMING CONVENTION

The naming of PAC program files shall be the same as the name of the controller. In general, the name of the controller and program file shall be <Facility> <Process Area> < Numerical Identifier>. For example, the controller name for RP5 primary treatment would be "RP5PRI1" and the file name would be "RP5PRI1.acd". Since the controllers are a redundant set, the hardware naming would be RP5PRI1A and RP5PRI1B.

The IEUA Facility Designations are detailed in Table 2 – IEUA Facility Designation below:

Table 1 – IEUA Facility Designation

Facility Name	Description
Regional Plant #1	RP1
Regional Plant #2	RP2
Carbon Canyon Wastewater Reclamation Facility	CCW
Regional Plant #4	RP4
Regional Plant #5	RP5
Regional Compost Authority, Inland Empire Regional Compost Facility	RC1
Ground Water Recharge	GWR
Recycle Water System	RWS

The IEUA Process Designations are detailed in Table 4 – IEUA Control System Equipment or Area below:

Table 2 – IEUA Control System Equipment or Area	
Control System Equipment	**Description**
TER	Main PAC Controller Tertiary Area
PRI	Main PAC Controller Primary Area
SEC	Main PAC Controller Secondary Area
PDC	Main PAC Controller Data Concentrator
SCL	Scale
GWI	Gateway Interface

SECTION 7

PROCESS LIBRARY

7.1 PLANTPAX USAGE AND EXCEPTIONS

All programming within the PAC environment shall utilize the pre-defined PlantPAx standard AOI blocks and the IEUA Custom Add On Instruction Library implemented in Function Block Diagram. It is the integrators responsibility to select the appropriate AOI block from the PlantPAx library and implement within the process logic.

If the integrator determines the PlantPAx library does not contain a block for a particular process or logic function required, the integrator shall create a specific AOI block for this purpose following the documentation format found in section 5.6 *Developed Add On Instructions*.

All process logic and AOI blocks shall be combined into a single Add-On Instruction to suit the requirement of the function prior to being implemented within the function block sheet. Functionality for equipment and process function shall be provided in single Add-On Instruction form.

If the Add-On Instruction does not exist, the integrator shall at this point provide a name and description of the Add-On Instruction block that they will be creating through the process defined in section 5.6 *Developed Add On Instructions*.

If the function required only exists once in the IEUA system and will not be used again throughout the system, the integrator can program the logic required for the process in ladder diagram in an individual routine outside of creating a specific AOI block. The creation of specific AOI blocks outside of the PlantPAx library and the usage of ladder diagram for logic outside of the PlantPAx library by the integrator shall be approved by IEUA prior to its usage.

7.2 SYSTEM CONFIGURATION TOOLS

The PlantPAx configuration tools allow for simple, repeatable configurations by multiple developers across many applications. The use of these tools is required to meet the IEUA standards.

7.2.1 PlantPAx Online Configuration Tool

The PlantPAx Online Configuration Tool is a Microsoft Excel spreadsheet that provides a quick and easy way to configure all AOI parameters for a given PAC program.

The Integrator shall utilize this tool to configure and document the AOI parameters. The final configuration shall be delivered as part of the application documentation and will assist is graphics workshops and development activities.

7.3 PROCESS LIBRARY USAGE

PlantPAx Process Object Library shall be used. It is the responsibility of the integrator to validate and confirm that the AOI block will correctly facilitate the equipment and/or process function as specified within the contract. All deviations from using the AOI blocks associated with the equipment and functions below shall be submitted to IEUA for prior approval.

Please reference the applicable Rockwell documentation, "Rockwell Automation Library of Process Objects: Logic Instructions."

The table below has a list of IEUA custom AOIs.

Table 3 – IEUA AOI Process Library

AOI Library Object	Equipment/ Function	Description
IEUA Custom Add-On Instruction Blocks		
U_ALT	Alternator Logic	Alternator Logic – (Standard AOI - Complete) Logic to toggle a single bit between two states.
U_BIT_CNTR	Bit Counter	Returns a DINT value of the number of true bits. Up to 10
U_BWSTAGE	Filter Backwash Staging Control	Backwash Staging – (Standard Routine or AOI) Placing Filters in a Backwash queue in the order specified by a specific control variable. Typically, level is used as the determining control variable to select the next filter in the queue to select the dirtiest filter to backwash.
U_COS	Change Of State	COS Alarm control w/inhibit (Standard AOI)
U_CTDT	Variable volume CT and DT Calc.	Variable volume CT and DT Control – (Standard AOI) To allow variable volume CT and DT calculations in the event that at basin level changes or basins are taken off line.
U_DOSE	Dose Calculator w/PID	Determines Dose in GPH
U_FCNTL	Flow Control w/ Pressure Sustain	Flow Control Loop – (Standard AOI) To control flow with Pressure Sustaining and Pressure Reducing options to not allow under pressurization on the upstream side and over pressurization on the downstream side.

Table 3 – IEUA AOI Process Library		
AOI Library Object	**Equipment/ Function**	**Description**
U_FLOAD	Filter Loading	Filter Loading, GPM/sq. ft. Control and Monitoring – (Standard Routine) To control and monitor the flow through a filter to meet compliance.
U_LIM_TEST	Analog Limit test	Compares two analog values to determine if they are within a deadband of each other. Adjustable time delays. Typically used for valve position alarming.
U_NOTIFY	Alarm Notification	Includes the primary notification pager test (Win-911) and backup notification (RACO) management.
U_PCNTL	Pressure Control w/ Flow Limiter	Pressure Control Loop – (Standard AOI) To control pressure with a total flow limiter option to not allow damaging flow velocities.
U_RAMP	Analog Ramping	Ramps an analog to a determined point with adjustable time and rate.
U_RAVE	Running Average	Running Average – (Standard AOI - Complete) Adjustable sample count and rate.
U_SCL	Scale with Parameters for Ladder Logic	Scale with Parameters for Ladder Logic – (Standard AOI - Complete) Equivalent to SCP in Logix 500.
U_SLOPE	Analog Slope Direction	Determines if an analog value is increasing or decreasing. Adjustable Sample Qty, Span, Time and Deadband.
U_STAGE	Device Staging	Device Staging – (Standard AOI - Complete) To control the START and STOPPING of devices to not allow more than one device from starting or stopping at a time to minimize process disruption (surge and hammering).
U_TDSP	Time of Day Setpoint Control	Time of Day Setpoint Control – (Standard AOI) Time of day setpoint control to allow 24 different setpoints for a single control loop that change each minute in a linear manner.
STANDARD ROUTINE	Level Control Loop	Level Control Loop – (Standard Routine - Complete) To control level on a 24 hour time of day variable setpoint with a GWR shutdown option.

Table 3 – IEUA AOI Process Library		
AOI Library Object	**Equipment/ Function**	**Description**
STANDARD ROUTINE	Source Inhibit Control for Level Control	Source Inhibit Control for Level Control – (Standard Routine - Complete) To "Gracefully" limit level control based on the source water level to not allow draining of a source and running the pumps dry.
STANDARD ROUTINE	Source Inhibit Control for Pressure Control	Source Inhibit Control for Pressure Control – (Standard Routine - Complete) To "Gracefully" limit pressure control based on the source water level to not allow draining of a source and running the pumps dry.

7.4 ADD-ON INSTRUCTION DOCUMENTATION

The following is an example Add-On Instruction (U_FIFO) document. Every AOI developed shall have this level of detail or greater. Any new AOIs should be submitted to the Agency using the following format and should include the relevant code and/or graphics.

Note: U_FIFO is no longer used (P_LLS is used instead). This is provided only as an example of the level of documentation required.

U_FIFO

FIRST-IN-FIRST-OUT PUMP CONTROL

AOI TECHNICAL MEMO

INSTRUCTION: U_FIFO

DESCRIPTION: First-In-First-Out (FIFO) Pump Control.

- **Overview**:
  - This will control the AUTO Call bit of each pump based on the number of pumps required (*PUMPS_REQ* input) and each pump's LEAD/LAG level (*PUMP_x_LL_LVL*).

- This will cycle up to ten pump's LEAD/LAG Level (*PUMP_x_LL_LVL*) in a FIFO sequence. 1 = LEAD and 2 thru 10 = LAG1 thru LAG9, 0 = Out of Auto Operation.
- The FIFO sequence will be triggered when a pump drops out for any reason. A pump will drop out if the number of pumps required (*PUMPS_REQ*) decreases or if a pump is no longer available for AUTO operation (the pump ready bit is zero). The pump ready bit (*PUMP_x_READY*) is set to 1 if the pump is in AUTO at the HMI, in REMOTE in the field and has NOT FAILED. If a pump's ready bit (*PUMP_x_READY*) is set to 0 the FIFO trigger will only impact pumps at a higher LEAD/LAG Level and move the remaining pumps up to fill the gap left by the pump that is no longer available.
- If the maximum number of pumps (*MAX_Number_of_Pumps_SP* input) is less than the total number of pumps, STANDBY pumps are created that will still rotate in the FIFO sequence. This is used where total pump flow capacity exceeds the system capacity or where power shedding is needed to limit the potential power used at any one time. The maximum number of pumps allowed to operate in AUTO at any one time is set by the *MAX_Number_of_Pumps_SP* input.
- Disabling the block (*DISABLE_FIFO* = ONE) will allow manual manipulation of each pump's LEAD/LAG level (*PUMP_x_LL_LVL*).

- **Functional Description**:
  - No alarming is controlled through this block.
  - Provides Automatic pump rotation to help equalize pump runtimes.
  - Provides the means to create dynamic Standby Pumps assignments that rotate through all pumps thereby allowing operation of all available pumps to help equalize pump runtimes.
  - Provides the ability to Manually set the pumps LEAD/LAG assignment if desired.
  - Continually monitors each pump's operational status to determine where each pump should reside to facilitate a true FIFO pump assignment.

- **Required Files:**
  U_FIFO.L5X

- **Optional Files:**
  PMP_CNTRL_NON_VFD.L5X
  PMP_CNTRL_VFD.L5X.

  Note: All AOI files must be imported into the controller project to be able to be used in the controller configuration. These files are stored in ieuapac file storage.

- **Controller Code**:
  This block is typically used when multiple pumps of similar capacity and similar control are configured for LEAD, LAG1, LAG2 ect.. operation. A DINT value of the number of pumps required (PUMPS_REQ) comes from the systems logic external of this AOI.

- **Tag Structure:**

TAG NAME	**DATA TYPE**	**Read or Read/Write**	**DESCRIPTION**
U_FIFO	U_FIFO	RW	Control Tag
DISABLE_FIFO	BOOL	RW	Disable FIFO, Set to 1 to manually manipulate each pump's LEAD/LAG level
PUMPS_REQ	DINT	R	The Number of Pumps required by the system. This is the number of pumps requested to run by the system.
MAX_Number_of_Pumps_SP	DINT	RW	Maximum Number of pumps that are allowed to run in AUTO
PUMP_1_READY	BOOL	R	Pump 1 Ready. In AUTO, In REMOTE, No Failures
PUMP_2_READY	BOOL	R	Pump 2 Ready. In AUTO, In REMOTE, No Failures
PUMP_3_READY	BOOL	R	Pump 3 Ready. In AUTO, In REMOTE, No Failures. A BOOL tag set to zero must be used in place of the Ready, as a place holder, if there is no Pump 3
PUMP_4_READY	BOOL	R	Pump 4 Ready. In AUTO, In REMOTE, No Failures. A BOOL tag set to zero must be used in place of the Ready, as a place holder, if there is no Pump 4
PUMP_5_READY	BOOL	R	Pump 5 Ready. In AUTO, In REMOTE, No Failures. A BOOL tag set to zero must be used in place of the Ready, as a place holder, if there is no Pump 5
PUMP_6_READY	BOOL	R	Pump 6 Ready. In AUTO, In REMOTE, No Failures. A BOOL tag set to zero must be used in place of the Ready, as a place holder, if there is no Pump 6
PUMP_7_READY	BOOL	R	Pump 7 Ready. In AUTO, In REMOTE, No Failures. A BOOL tag set to zero

			must be used in place of the Ready, as a place holder, if there is no Pump 7
PUMP_8_READY	BOOL	R	Pump 8 Ready. In AUTO, In REMOTE, No Failures. A BOOL tag set to zero must be used in place of the Ready, as a place holder, if there is no Pump 8
PUMP_9_READY	BOOL	R	Pump 9 Ready. In AUTO, In REMOTE, No Failures. A BOOL tag set to zero must be used in place of the Ready, as a place holder, if there is no Pump 9
PUMP_10_READY	BOOL	R	Pump 10 Ready. In AUTO, In REMOTE, No Failures. A BOOL tag set to zero must be used in place of the Ready, as a place holder, if there is no Pump 10
TOT_AVAIL_PMPS	DINT	R	Total Number of Pumps Available for AUTO Operation
PUMP_1_LL_LVL	DINT	RW	Pump 1 Lead/Lag Level
PUMP_2_LL_LVL	DINT	RW	Pump 2 Lead/Lag Level
PUMP_3_LL_LVL	DINT	RW	Pump 3 Lead/Lag Level. A DINT tag must be used in place of the LL_LVL, as a place holder, if there is no Pump 3
PUMP_4_LL_LVL	DINT	RW	Pump 4 Lead/Lag Level. A DINT tag must be used in place of the LL_LVL, as a place holder, if there is no Pump 4
PUMP_5_LL_LVL	DINT	RW	Pump 5 Lead/Lag Level. A DINT tag must be used in place of the LL_LVL, as a place holder, if there is no Pump 5
PUMP_6_LL_LVL	DINT	RW	Pump 6 Lead/Lag Level. A DINT tag must be used in place of the LL_LVL, as a place holder, if there is no Pump 6
PUMP_7_LL_LVL	DINT	RW	Pump 7 Lead/Lag Level. A DINT tag must be used in place of the LL_LVL, as a place holder, if there is no Pump 7
PUMP_8_LL_LVL	DINT	RW	Pump 8 Lead/Lag Level. A DINT tag must be used in place of the LL_LVL, as a place holder, if there is no Pump 8
PUMP_9_LL_LVL	DINT	RW	Pump 9 Lead/Lag Level. A DINT tag must be used in place of the LL_LVL, as a place holder, if there is no Pump 9
PUMP_10_LL_LVL	DINT	RW	Pump 10 Lead/Lag Level. A DINT tag must be used in place of the LL_LVL, as a place holder, if there is no Pump 10
PUMP_1_Auto_Call	BOOL	R	Pump 1 Auto Call Output

PUMP_2_Auto_Call	BOOL	R	Pump 2 Auto Call Output
PUMP_3_Auto_Call	BOOL	R	Pump 3 Auto Call Output
PUMP_4_Auto_Call	BOOL	R	Pump 4 Auto Call Output
PUMP_5_Auto_Call	BOOL	R	Pump 5 Auto Call Output
PUMP_6_Auto_Call	BOOL	R	Pump 6 Auto Call Output
PUMP_7_Auto_Call	BOOL	R	Pump 1 Auto Call Output
PUMP_8_Auto_Call	BOOL	R	Pump 8 Auto Call Output
PUMP_9_Auto_Call	BOOL	R	Pump 9 Auto Call Output
PUMP_10_Auto_Call	BOOL	R	Pump 10 Auto Call Output

- **Operations:**
  - Modes of Operation:
    - Manual Operation is enabled when the DISABLE_FIFO input bit is set to ONE, allowing each pump's LEAD/LAG level to be set manually.
    - Auto Operation is enabled when the DISABLE_FIFO input bit is set to ZERO.
  - Alarms – There are no alarms associated with this control block.
  - Execution is of this block is continuous per program scan.

- **Programming Exampl**e: Ladder, with 5 Pumps

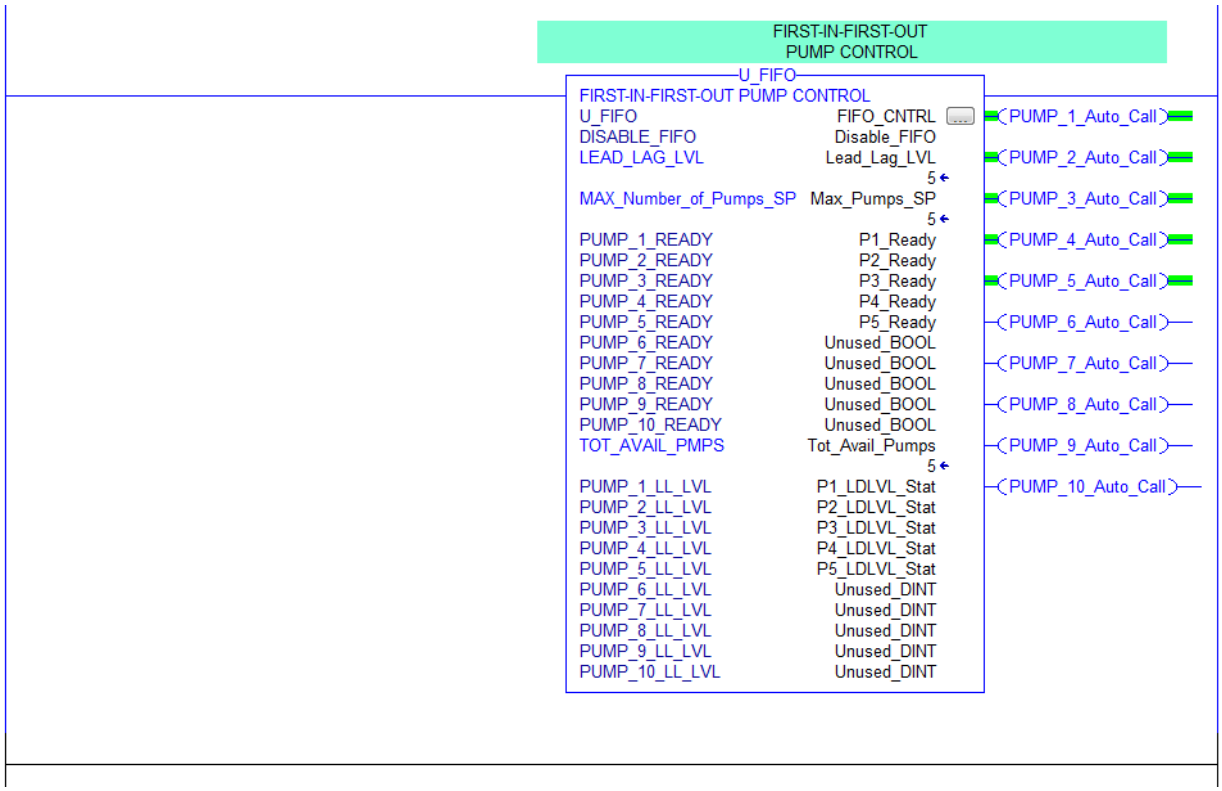

- **Programming Example**: Function Block, with 5 Pumps

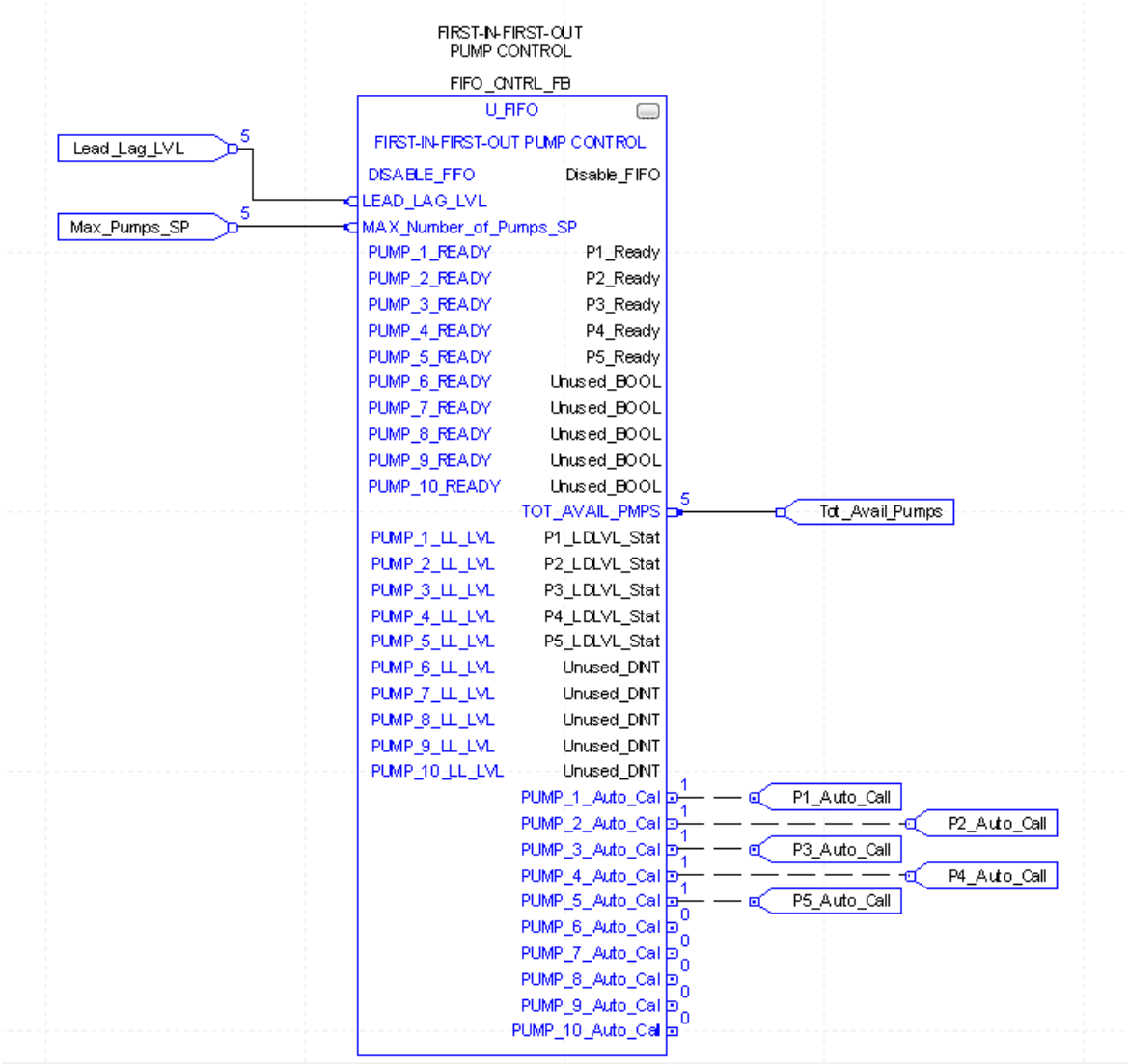

- **Optional Pump Control Blocks**

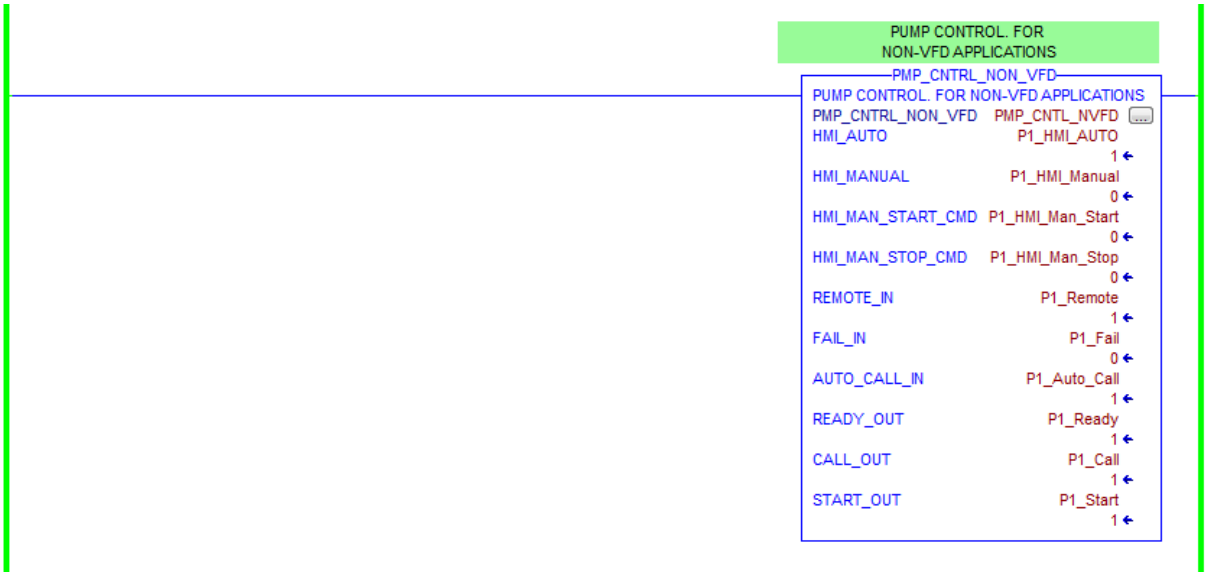
PUMP CONTROL. FOR
NON-VFD APPLICATIONS
PMP_CNTRL_NON_VFD
PUMP CONTROL. FOR NON-VFD APPLICATIONS
PMP_CNTRL_NON_VFD PMP_CNTL_NVFD
HMI_AUTO P1_HMI_AUTO
1
HMI_MANUAL P1_HMI_Manual
0
HMI_MAN_START_CMD P1_HMI_Man_Start
0
HMI_MAN_STOP_CMD P1_HMI_Man_Stop
0
REMOTE_IN P1_Remote
1
FAIL_IN P1_Fail
0
AUTO_CALL_IN P1_Auto_Call
1
READY_OUT P1_Ready
1
CALL_OUT P1_Call
1
START_OUT P1_Start
1

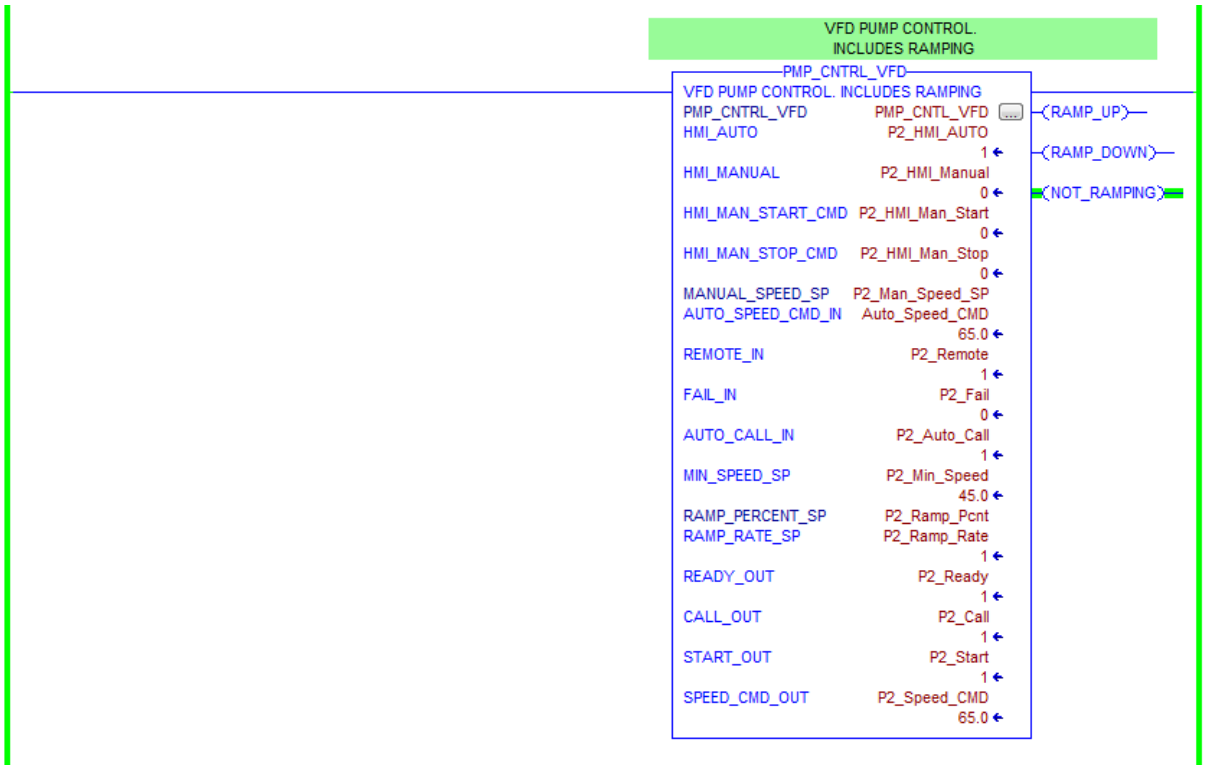
VFD PUMP CONTROL.
INCLUDES RAMPING
PMP_CNTRL_VFD
VFD PUMP CONTROL. INCLUDES RAMPING
PMP_CNTRL_VFD PMP_CNTL_VFD
HMI_AUTO P2_HMI_AUTO
1
HMI_MANUAL P2_HMI_Manual
0
HMI_MAN_START_CMD P2_HMI_Man_Start
0
HMI_MAN_STOP_CMD P2_HMI_Man_Stop
0
MANUAL_SPEED_SP P2_Man_Speed_SP
AUTO_SPEED_CMD_IN Auto_Speed_CMD
65.0
REMOTE_IN P2_Remote
1
FAIL_IN P2_Fail
0
AUTO_CALL_IN P2_Auto_Call
1
MIN_SPEED_SP P2_Min_Speed
45.0
RAMP_PERCENT_SP P2_Ramp_Pcnt
RAMP_RATE_SP P2_Ramp_Rate
1
READY_OUT P2_Ready
1
CALL_OUT P2_Call
1
START_OUT P2_Start
1
SPEED_CMD_OUT P2_Speed_CMD
65.0
RAMP_UP
RAMP_DOWN
NOT_RAMPING

SECTION 8

SCADA SOFTWARE DEVELOPMENT AND TESTING

8.1 OVERVIEW

This section describes the minimum requirements for software functional definition, testing, deployment, and commissioning of all HMI and PAC software for the Agency's SCADA Enterprise system. The following is an overview of the SCADA software development methodology to be followed by the Contractor:

i. **Functional Definition:** Update of the Process Control Narratives (PCN) and preparation of software test plan and forms. IAB/PSE developed and approved by Rockwell commercial engineering and IEUA.

ii. **Development:** Development of HMI and PAC code in compliance with the Agency's High Performance HMI and PAC standards to meet the functional requirements defined in the PCN. This includes development of Master I/O List, Historian Tag Configurations, and Reports.

iii. **Contractor Bench Test (CBT)**: Bench test HMI and PAC code in compliance with the accepted test plan and completion of the test forms.

iv. **Factory Acceptance Test (FAT)**: Perform a FAT that is witnessed by the Agency and/or their representative using the accepted test plan and forms.

v. **Training and Transition Plan:** Provide training to Operations and SCADA staff on the successfully FAT tested SCADA software. Prepare a Transition Plan to cut-over from the old system to the new system.

vi. **Site Acceptance Test (SAT):** Perform a SAT that is witnessed by the Agency and/or their representative using the accepted test plan and forms.

vii. **Operations Performance Test (OPT)**: Perform a twenty (21) day operations performance test to identify software issues that could only be identified under operating conditions.

viii. **As-Built Documentation**: Update the Process Control Narrative (and other documentation) to accurately reflect the as-built condition for incorporation in the O&M manual. Update the IAB/PSE to reflect as-built conditions. Update all wiring diagrams to reflect as-built conditions.

ix. **As-Built Programming**: Documented electronic copies of all implemented programming.

x. **Warranty**: The Software Warranty Period will enable the Agency to call upon the Contractor to resolve software deficiencies identified after substantial completion.

8.2 FUNCTIONAL DEFINITION

The Contractor shall submit the following documents for review and acceptance by the Agency prior to developing the associated HMI and PAC code. The Agency will require ten (10) business days to review the submittal. The Contractor will proceed at their own risk if they start HMI and PAC coding prior to Agency acceptance of the submittal.

The Contractor is encouraged to coordinate a workshop with Agency staff to review the documents prior to their submittal. The Agency will make SCADA, Operations, and Engineering staff available during the workshop to answer the Contractor's questions or clarify statements in the existing PCN.

Process Control Narrative (PCN): The Contractor will review and then update/revise the Process Control Narrative supplied with the Request for Bid (RFB) to provide the level of detail necessary for the PCN to be translated to HMI and PAC code. Additional detail provided by the Contractor may include:

- Analog Input attributes including: engineering units, zero, span, and alarm limits (LoLo, Lo, Hi, HiHi)
- Device failure response.
- Process failure response.
- Default process setpoints and tuning parameters.
- Process operating constraints
- Alarm suppression

The Contractor may be required to access any or all of the following resources to collate the necessary information including: the PCN included in the RFB, P&ID drawing (if available), Request for Information (RFI) submitted to the Agency (Operations, SCADA, or Engineering), existing DCS/PLC/PAC code, existing HMI screen captures. If the Contractor has demonstrated that the necessary information cannot be secured through these sources then the Contractor shall annotate the PCN to identify that additional information is required. The Contractor shall proceed as directed by the Agency.

Test Plan and Forms: The Contractor shall create and submit a test plan, and supporting test forms, which will demonstrate that code meets the functional requirements documented in the PCN and that the code is compliant with Agency standards. The same Test Forms shall be used for the CBT, FAT, and SAT. The test plan shall be a comprehensive plan that tests all aspects of the HMI and PAC code including, but not limited to:

- Analog and digital loops from the PAC termination to the HMI and Historian including all associated attributes and alarms.
- Device logic normal operation, failure responses and alarms.
- Process logic normal operation, failure responses, alarms, interlocks and permissives.
- HMI screen design, equipment pop-ups, alarm annunciation, dynamic objects, navigation, etc.

- Historical archiving, trending, and calculations.
- Network communications normal operation, failover, recovery, and statistics.
- The operation of auxiliary systems such as auto-dialers and integration with other applications.

The test plan shall describe how the code will be exercised offline to emulate, as close as possible, the real-world.

Test forms shall include an initials box for the Contractor and Agency (or representative) and a comment field.

The Agency will provide the Contractor with sample test forms created in Excel. The Contractor may use their own test forms if reviewed and accepted by the Agency as meeting the testing requirements

Custom Add-On Instructions (AOI): The Contractor is required to use the Agency's existing approved Add-on Instructions to the greatest extent possible. If the PCN includes functionality that cannot be met The Contractor shall supply documentation for new Rockwell or custom AOIs recommended by the Contractor to meet the requirements of the Process Control Narrative. Recommended AOIs are to be documented using the AOI documentation template described in this standard and submitted to the Agency for review and acceptance.

8.3 CONTRACTOR BENCH TEST (CBT)

The purpose of the CBT is for the Contractor to prove the effectiveness of the test plan and verify that the HMI and PAC code are ready to be FAT tested for the Agency.

The Contractor shall:

- Perform a full system CBT employing the Agency reviewed and accepted test plan and forms.
- Submit the completed CBT documentation to demonstrate that the software is ready for a factory acceptance test.
- Revise, if necessary, the test plan and forms, PCN, and AOI documentation for the FAT. Prior to revising documentation previously reviewed and accepted by the Agency, the Contractor will schedule a meeting to present and review the required changes.
- Submit the CBT HMI screen captures, HMI and PAC code.
- Check the HMI and PAC code into the Agency's revision control system.

8.4 SOFTWARE FACTORY ACCEPTANCE TEST (FAT, WITNESSED)

The purpose of the FAT is for the Contractor to demonstrate to the Agency that HMI and PAC code meet the functional requirements of the PCN and that the software is compliant with Agency standards.

The Contractor shall:

- Submit FAT documentation (PCN, Test Plan and Forms) and request to schedule the FAT.

- Perform a full system FAT employing the Agency reviewed and accepted test plan and forms.
- Initial each test as it is completed.
- Log FAT deficiencies and test results. If allowed by the Agency, correct minor deficiencies as they're discovered and re-test.
- Correct all outstanding issues and if required by the Agency reschedule the FAT.
- Revise, if necessary, the test plan and forms, PCN, and AOI documentation for the SAT. Prior to revising documentation previously reviewed and accepted by the Agency, the Contractor will schedule a meeting to present and review the required changes.
- Submit completed FAT documentation (PCN, Test Plan and Forms) to demonstrate that the software is ready for the SAT.
- Submit the FAT HMI screen captures, HMI and PAC code.
- Check the HMI and PAC code into the Agency's revision control system.

The Agency shall:

- Review the submitted Test Plan and Forms to ensure they will fulfill the purpose of the FAT.
- Review the submitted FAT code for compliance with Agency standards.
- Witness the FAT and initial all tests as their completed to indicate that the test was witnessed by the Agency. Add one of the following comments as required: Accepted or Not Accepted.

8.5 TRAINING AND TRANSITION PLAN

The purpose of providing Operator and SCADA training at this point in the software implementation is to prepare Agency staff to support the transition from the old system to the new system. The requirements for Training and Transition Plan are detailed in the Specification Division xx, Section xx.

The Contractor shall:

- Prepare a training outline for Operator and SCADA training and submit to the Agency for review.
- Prepare and deliver Operator and SCADA training. The Specification will define the number of training sessions the Contractor will deliver to ensure that all shifts are covered.
- Develop and submit a Transition Plan that describes the cut-over from the old system to the new system. The Transition Plan should be as efficient as possible while mitigating the impact on Operations. The Transition Plan will consider transition failures and methods of recovery or returning to the old system.

The Agency shall:

- Review the training outline.
- Coordinate the training sessions to ensure all shifts receive adequate training.
- Review the Transition Plan and provide input from Operations with respect to strategies for maintaining operational continuity.

8.6 SOFTWARE SITE ACCEPTANCE TEST (SAT)

The purpose of the SAT is for the Contractor to demonstrate to the Agency that HMI and PAC code meet the functional requirements of the PCN in-situ and to tune control parameters as necessary to address the actual performance of process equipment in the field.

The Software SAT requires that all affected field devices be operational in order to provide validation of the I/O points and control strategies. Simulation or 'jumpering' of points is not permitted. Hardware installation and field wiring are expected to be complete and pre-tested (pre-validated) prior to scheduling of the Software SAT. The Contractor must demonstrate that all related field wiring and the control panel installation is complete and fully tested including: I/O loop verification (from PLC to the field), hardwired interlocks, local control of equipment, remote start/stop of equipment, network communications, instrument configuration and calibration. The detailed requirements for hardware testing and commissioning are detailed in the Specification Division xx, Section xx.

The Contractor shall:

- If the HMI and PAC configuration and code has been modified post FAT then check the revised HMI and PAC code into the Agency's revision control system.
- Submit SAT documentation (PCN, Test Plan and Forms) and request to schedule the SAT.
- Perform a full system SAT employing the Agency reviewed and accepted test plan and forms.
- Initial each test as it is completed.
- Log SAT deficiencies and test results using the test forms. If allowed by the Agency, correct minor deficiencies as they're discovered and re-test. It is expected that the control parameters will be tuned during the SAT based on the field performance of equipment.
- Correct all outstanding issues and if required by the Agency reschedule the SAT.
- Submit completed SAT documentation (PCN, Test Plan and Forms) to demonstrate that the software is ready for the OPT.
- Submit the SAT HMI screen captures, HMI and PAC code.
- Check the HMI and PAC code into the Agency's revision control system.

The Agency shall:

- Review the submitted Transition Plan,Test Plan and Forms to ensure they will fulfill the purpose of the SAT.
- Provide the necessary Operations and Maintenance staff to support the SAT.

- Witness the SAT and initial all tests as their completed to indicate that the test was witnessed by the Agency. Add one of the following comments as required: Accepted or Not Accepted.

8.7 OPERATIONAL PERFORMANCE TEST (OPT)

The purpose of the Operations Performance Test (OPT) is to test the impact of Operator interaction with the new system and discover software issues that could not be reasonably foreseen or tested during the acceptance testing process.

The OPT will run for thirty (30) contiguous days during which the Operators will log any identified system issues or concerns to a hard-covered notebook supplied by the Contractor. On or shortly after the tenth (10th) day of the OPT the Agency and Contractor will meet to review the issues logged by the Operator. Each issue will be evaluated to determine, if:

- It is in-scope or out-of-scope. Software issues that are in-scope will be added to the Software Issues Log by the Agency for tracking purposes.
- The issue is minor and therefore can be revised, deployed, and demonstrated without acceptance testing.
- The issue is a major and therefore needs to undergo a witnessed acceptance test prior to deployment.

The above process will be repeated after the completion twenty first (21st) day.

8.8 AS-BUILT DOCUMENTATION

Following the completion of Operations Performance Test, the Contractor will update the Process Control Narrative to accurately reflect the as-built condition of the software. The as-built PCN will be incorporated into the Operations and Maintenance (O&M) manual submitted by the Contractor.

The contractor will update the IAB/PSE to reflect the as-built condition of the system and submit to the Agency.

The contractor will update all drawings to reflect the as-built system and submit to the Agency.

The Contractor will submit final versions of the HMI and PAC code to the Agency and will check the HMI and PAC code into the Agency's revision control system.

Refer to Control Specification Division xx, Section xx for additional O&M manual requirements.

8.9 WARRANTY PERIOD

Verify Division 40 and relevant Sections for each Project"

The Warranty Period for the project is determined from the contract documents. The Warranty Period for each control panel will begin when the work associated with that control panel is deemed substantially complete by the Agency. Substantial Completion is defined when the following milestones have been achieved:

- The Contractor has successfully completed the OPT and issues identified during the OPT have been resolved to the Agency's satisfaction.
- The Contractor has updated all As-Built documentation. The As-built documentation has

been submitted to the Agency and accepted by the Agency.

During the Warranty Period the Contractor will be contacted by the Agency to resolve any issues that are deemed by the Agency to be the result of deficient software. The Agency will assign a severity level based on the operational impact of the issue. The severity level will determine the required Issue Response Time and the Issue Recovery Time for the Contractor.

- **Severity Level 1:** Issues that have an immediate impact on regulatory compliance or operational continuity will have an Issue Response Time of four (1) hr and an Issue Recovery Time of twenty (24) hrs.
- **Severity Level 2:** Issues that place regulatory compliance or operational continuity at risk will have an Issue Response Time of twenty four (24) hrs and an Issue Recovery Time of three (2) business days.
- **Severity Level 3:** Issues that do not impact regulatory compliance or operational continuity will have an Issue Response Time of 48 hrs and an Issue Recovery Time of ten (10) business days.

To facilitate the Contractor's response, the Agency will provide the Contractor with secure remote access to the system. Remote access to IEUA's SCADA system will be governed by IEUA's Remote Access Policy statement.

The Contractor will be required to provide the Agency with a means of contacting Contractor within one (1) hour of the issue being identified. The means of contact may be the Contractor's central dispatch or a contact list for on-call staff.

The Agency will maintain a Warranty Claim Database to track all warranty requests, Contractor response, and track the completion status of the warranty work. If it is determined by the Agency and the Contractor that the warranty request was not covered by the warranty then the Contractor will be reimbursed for their time and expenses (maximum allowable mark-up of 10%) at their previously contracted rates.

Inland Empire Utilities Agency
A MUNICIPAL WATER DISTRICT

Section 4-Electrical and I&C-Appendices

iii SCADA Standards

HIGH PERFORMANCE HMI PROGRAMMING STANDARDS

HIGH PERFORMANCE HMI PROGRAMMING STANDARDS

Inland Empire Utilities Agency
A MUNICIPAL WATER DISTRICT

HIGH-PERFORMANCE HUMAN MACHINE INTERFACE (HMI) PROGRAMMING STANDARDS

EMA

REVISION HISTORY

Revision	Date	Comments
0	11/15/2010	Original Issue
1	1/10/2011	Second Issue
2	6/07/2011	Third Issue
3	3/2/2012	Fourth Issue
4	4/9/2012	Fifth Issue
5	5/1/2012	Sixth Issue
6	2/28/2014	Seventh Issue
7	8/11/2014	Eight Issue
8	9/5/2014	High Performance HMI Standards and PlantPAx updates
9	9/23/2014	Final Issue
10	10/26/2016	Revised based on the comments from CCWRF
11	3/08/2017	ISS Comments
12	10/10/2019	ISS Updates

FILENAME: P:\B05849.001 Inland Empire High-Performance HMI\3.0 Deliverables\IEUA HMI Programming Standards Rev 9.0 Draft.docx

SECTION 1

INTRODUCTION

1.1 PURPOSE

The Inland Empire Utilities Agency (IEUA) has developed high performance Human-Machine Interface (HMI) programming standards for use with the Agency's water, wastewater and industrial facilities. The standards are to be used by IEUA staff, consultants, and programmers working within the Agency to maintain a consistent approach to programming and implementing Supervisory Control and Data Acquisition (SCADA) systems.

In order to ensure consistency between the Programmable Automation Controller (PAC) and Human Machine Interface (HMI) development, it is imperative that the standards be followed.

This approach will make the following possible:

- Seamless integration of new projects
- Compatible software for all IEUA projects
- Easy modification and maintenance of the HMI systems
- Security throughout the SCADA network
- Uniform handling of alarms
- Reduction of training period for IEUA staff

1.2 SCOPE

These HMI Standards apply to all projects incorporating process control in IEUA's SCADA systems. These standards shall be used as guidance for new, or retrofit, facility designs conducted by, or for, IEUA.

IEUA has standardized the base software components required to ensure a consistent approach is taken throughout IEUA facilities. The general components are documented in the following sections. If there are any changes that require a deviation from this standard, the IEUA Integrated System Services (ISS), Operations, and Engineering Departments must be consulted to ensure consistency throughout the system.

1.3 GLOSSARY

Table 2: Glossary Definitions

Term	Description

Display	Graphical representation of processes, trends, control functions and other graphic images using static and dynamic symbols and text.
HMI	Human Machine Interface. A term used to describe the human interface component of a computer control system. The common usage of this term refers to the graphical representations of screens that are displayed to the user.
Program	A mode of operation set at the HMI, which places a device under the control of the computer system. The equipment must be in remote mode to be placed in Program Mode.
Operator	A mode of operation set at the HMI which places a device under the control of the operator. The equipment must be in remote mode to be placed in Operator Mode.
Targets	A dynamic symbol on the graphic display that is selectable with the pointing device and provides navigation to other displays or software control functions.
Group	Two or more devices which function together as a system, or sub-system.
PlantPAx	It is a Rockwell automation environment that offers process and batch control users a new library of reusable control objects with tools to simplify its deployment
IEUA Library	It is the library of instructions, graphics, and faceplates for numerous devices and logic functions.

SECTION 2

REFERENCE DOCUMENTS

Refer to the following documents for additional information:

- IEUA Programmable Automation Controller Programming Standards
- IEUA Alarm Management ~~Guidelines~~
- IEUA Process Control Narratives
- PlantPAx Process Automation System Reference Manual
- PlantPAx Library Release - Current Version Used by IEUA (Verify with Agency)
- PlantPAx Library - Current Version Used by IEUA (Verify with Agency)
- PlantPAx Library Alarm Configuration - Current Version Used by IEUA (Verify with Agency)
- PlantPAx HMI Security Configuration
- ASM Consortium Guidelines, Effective Console Operator HMI Design, Current Version Used by IEUA (Verify with Agency)
- The High-Performance HMI Handbook published by ISA

SECTION 3

GENERAL CONFIGURATION

3.1 HMI PROGRAMMING ENVIRONMENT

IEUA is using Rockwell Automation's FactoryTalk software components for the HMI development. This consists of using the FactoryTalk suite of software for HMI development in combination with the PlantPAx add-on instructions (AOIs), global objects, templates, faceplates, and design utilities. The PlantPAx HMI library shall be used in coordination with the PlantPAx AOIs and IEUA PAC Programming Standards to ensure consistency and ease of use within the HMI.

3.1.1 Software Versions and Upgrades

It is the responsibility of the Integrator/Contractor to request from IEUA the recommended software version to perform the programming and integration work. IEUA will decide on the version based on input from the Integrator, the latest version of Studio 5000 and FactoryTalk software, and the overall compatibility with the PlantPAx system.

As part of the version request, IEUA will provide the Integrator with Agency specific libraries of faceplates and global objects. These Agency specific components provide additional functionality not included in the PlantPAx objects.

The Integrator shall be responsible for one (1) version upgrade associated with the PlantPAx system and all related systems during the course of the project (if released by Rockwell Automation during the course of the project). This includes all FactoryTalk software. IEUA shall be responsible for directing the Integrator when to perform the upgrade.

3.1.2 Software Patches

IEUA will provide the Integrator with the exact list of patches, or patch roll-ups, at the time of the project implementation to be installed. All firmware and patches shall be installed during the course of the project when approved by IEUA. The same patch revision should be installed on all computers with FactoryTalk software installed at the time of the software setup.

3.1.3 Version Compatibility

The Integrator shall verify that all the different features and capabilities between different series of products and associated firmware versions are compatible. It is the responsibility of the Integrator to notify IEUA of any compatibility issues in a timely manner prior to

installation onsite. Rockwell Automation provides specific firmware bundles for each revision and compatibility information is available from the Rockwell Automation website.

3.2 DEVELOPMENT WORKSHOPS

The standards included herein are intended to provide an overall guideline for application development to maintain consistent look, feel, and functionality. The Integrator shall hold workshops to define the specific content and functions required to deliver an operating HMI application that meets all of the Agency's requirements for a specific site and application. The following sections describe typical Integrator workshops.

3.2.1 Graphics

In the graphics development workshop, the Integrator will work with IEUA ISS, Operations, Maintenance and Engineering Departments to develop a thorough understanding of the process and the necessary operator actions required to control the process during various scenarios. This is typically broken into several detailed workshops depending on the size and intricacy of each project. Screenshots of HMI displays should be submitted prior to the graphics development workshop.

3.2.2 Alarming

The Integrator will lead a workshop with appropriate stakeholders to document and rationalize the alarms for each piece of equipment. All points defined in the Process Control Narratives will be documented and developed using the Agency's Alarm Management Standards in Appendix B. In addition, the workshop will address any additional alarms or analog values that the backup alarm notification (RACO) will transmit.

Rockwell has stopped all support for VantagePoint. Trends on HMI shall utilize TrendPro. Alarm and event reports shall utilize Rockwell's recommendations/ standards. PI Reports shall be used for process reports, energy reports, etc.

3.2.3 VantagePoint and OSISoft PI

The Integrator will lead a workshop with ISS staff and Operations to review the VanatagePoint and PI Asset Framework model. The VantagePoint model shall be developed using PI Asset Framework.

3.2.4 Database and Reporting

IEUA uses ~~FactoryTalk VantagePoint and OSISof~~ PI Datalink for all KPIs and reporting. The Integrator will lead a workshop with appropriate stakeholders to determine the following:

- Required KPIs and reports
- KPI display and analysis components
- Report design and layout

- KPI and reporting data integration methods

In general, the various types of reports are described below:

- Rockwell's SSRS Alarm and Event Reports
  - This is applicable if the project included a new HMI/A&E Server
  - IEUA utilizes Rockwell's SSRS solution for Alarm and Events Reports. If the project includes a new FT Alarm and Events Server, this A&E SSRS reports solution needs to be set up. See Rockwell's knowledgebase 68296.
- Event Log Reports
  - SSRS Report for Event Logs that queries the A&E Diagnostics SQL Database for all user actions (change of set points, login/logout, etc.)
  - Diagnostics should be setup on all HMI clients.
- Dark Time Reports
  - This is applicable if the project included a new HMI/A&E Server
  - Dark Time Reports must be created in SSRS and included within the VantagePoint Portal.
- Process Reports for Operations
  - Process reports, including KPI reports
  - Workshop for finalizing reports. Report design narrative needs to be submitted for approval.
- Energy Reports
  - Workshop for finalizing reports. Report design narrative needsto be submitted for approval.

Rockwell has stopped all support for VantagePoint. Trends on HMIshall utilize TrendPro. Alarm and event reportsshall utilize Rockwell's recommendations/standards. PI Reportsshall be used for process reports, energy reports, etc.

3.2.5 Archival and Retrieval of Information

The Integrator will ensure that all data from each FactoryTalk Live Data provider will be sent to the FactoryTalk Historian. Please reference the "FT Historian Tag Settings Standard" document for a general guideline on which PLC tags are to be historized, which additional tags need to be created within the historian, and the configuration settings for each type of tag. The Integrator will hold a workshop with Agency personnel to determine specific data that will be sent to the FactoryTalk Historian.

3.3 FACTORYTALKVIEW SE

FactoryTalk View SE shall be configured with redundant HMI/A&E servers and redundant data servers. The master IAB/PSE needs to be updated and submitted for review and approval by

Rockwell and IEUA. The PSE shall verify that the servers are not overloaded.

FactoryTalk Diagnostics shall be set up on all HMI clients and logged to the A&E SQL Diagnostics Database.

3.4 FACTORYTALKVIEW ALARM AND EVENTS

FactoryTalk Alarm and Events is utilized for alarm monitoring. All alarms must be configured in A&E using the PlantPAx Alarm Builder Tool. For every PlantPAx object, all available alarms within the object, whether used or not, shall be configured within A&E. For example, if only a High alarm is specified in the PCN, all P_AIn alarms should still be configured within A&E (including HH, H, L, LL, input fail, etc.). This allows the operator in the future to enable one of those alarms from the faceplate and have annunciation within A&E.

3.5 WIN-911 ALARM NOTIFICATION

IEUA utilizes Win-911 for alarm notification. The latest version must be installed and configured with redundancy. Details of Win-911 alarm notification configuration can be addressed in the workshop for Alarming.

3.6 RACO BACKUP ALARM NOTIFICATION

IEUA utilizes RACO for backup alarm notification. A RACO unit is required for every location. The RACO will notify operations staff of any unacknowledged priority 1 alarm (with time delay) and will notify ISS staff of any system alarm. RACO alarms are to be determined in the workshop for Alarming.

3.7 THINMANAGER

IEUA utilizes ThinManager for managing terminal server HMI deployment to all thin clients. ThinManager is also used to make all PanelView displays available to thin clients using a VNC connection. All PanelViews should be set up with VNC connection enabled.

Note: Each project needs to consider how many additional thin clients (operator workstations) are needed and purchase additional ThinManager client licenses as needed. Each project also needs to consider if any additional terminal servers and purchase any applicable licenses.

3.8 FACTORYTALK HISTORIAN

IEUA utilizes FactoryTalk Historian Collectives for historizing data points. Please reference the “FT Historian Tag Settings Standard” document for which PLC tags are to be historized, which

additional tags need to be created within the historian, and the configuration settings for each type of tag.

An excel workbook of all the tags to be added, with separate sheets for each tag type and in PI Builder format with all tag attributes exposed, is to be submitted to IEUA for review prior to implementation.

FactoryTalk Historian interfaces shall be configured to be redundant, each residing on its corresponding FactoryTalk data server. Each interface shall be configured for "disconnected at startup", which allows the interfaces to begin data collection even if disconnected from FactoryTalk Historian data archive.

Note: Each project needs to consider the number of tags that need to be added and purchase additional FactoryTalk Historian tag licenses as needed. If the project requires additional data servers, then redundant FactoryTalk interfaces also need to be installed and configured, with FTLD Interface Disconnected Startup enabled (Rockwell KB 59932 and 66883).

Rockwell has stopped all support for VantagePoint. Trends on HMIshall utilize TrendPro. Alarm and event reportsshall utilize Rockwell's recommendations/standards. PI Reportsshall be used for process reports, energy reports, etc.

3.9 FACTORYTALK VANTAGEPOINT

IEUA utilizes FactoryTalk VantagePoint within the ICS network for visualization of historical data. Each project is responsible for adding all new FactoryTalk Historian tags to the VantagePoint model. The VantagePoint model should use PI AssetFramework for building the model. The VantagePoint model must be approved prior to implementation.

3.10 ~~OSISOFT~~ ENTERPRISE PI SYSTEM

IEUA utilizes ~~OSISoft's~~ AVEVA enterprise PI System on the business network for visualization of historical data at the business level. PI Auto Point Sync (in the DMZ) automatically replicates and synchronizes tag configurations from FT Historian to the PI system. Pi-to-PI interfaces in the DMZ pass the data collected by FT Historian to the enterprise PI historian

The Integrator is responsible for ensuring that the tags from FT Historian are replicated in the enterprise PI system and that data collection is working properly. The Integrator is also responsible for completing the Asset Framework model in the enterprise PI historian.

Note: Each project needs to consider the number of tags that need to be added and purchase additional PI tag licenses as needed. Please keep in mind that, unlike FT Historian, ~~OSISoft~~ PI counts every tag regardless if it is from a device or if it is internally calculated (e.g. min, max, average). Also, each project is responsible for adding to the PI Asset Framework model.

3.11 SERVER REQUIREMENTS

Virtual hosts need to be reviewed and checked for adequate resources to support the project. If resources are insufficient, project needs to include specifications for additional host servers to accommodate the number of virtual machine (VMs) needed.

Each new virtual server and machine will require Microsoft server OS licensing based on the number of cores installed in the VM host. Each new terminal server needs to provide a minimum of 20 client access licenses (CAL).

3.12 OPERATOR WORKSTATION REQUIREMENTS

Any new operator client workstation needs to have SCADA client licensing, Thin Manager client licensing.

SECTION 4

HMI DESIGN PHILOSOPHY

This standard presents the Agency-wide, graphic display requirements for the Control System. The standards presented herein are intended to set a framework for application development that supports proactive operator situational awareness and efficient and effective interaction with the HMI. This philosophy follows the general principles of the High-Performance HMI Handbook, adapted for the specific needs of the Agency. As such, the development cycle is more rigorously focused on the operational context and the need to support the operator's mental model of the process.

4.1 PRINCIPLES AND ATTRIBUTES

The HMI is an operational tool that enables proactive monitoring and identification of problems within the utility's systems. As an operational tool, the HMI must be designed and implemented in such a way as to support the following IEUA operational philosophies:

- Continually meet or exceed compliance requirements.
- Optimize the operations of utility systems to reduce operating and maintenance costs.
- Minimize the occurrence and quickly identify abnormal situations that could lead to safety or quality issues.

To support those operational goals, the operator must be provided with information in a clear and intuitive format that minimizes the possibility of mistakes. The following three primary principles should be followed when creating HMI applications and displays:

- Clarity
    - Operator graphics should be intuitive and easy to understand
    - Graphics should clearly show process state and conditions
    - Graphic elements used to control the process are clearly distinguishable and consistently implemented
    - Graphics do not contain unnecessary detail or clutter
    - Graphics convey relevant information to operators
    - Process information has prominence based upon relative importance
    - Alarms and indications of abnormal situations are clear, prominent, and consistently distinguishable
- Consistency

    - Graphic functions are standardized, intuitive, straightforward, and involve minimal keystrokes or pointer manipulations
    - Graphic display navigation is logical, hierarchical, and performance-oriented
- Feedback
    - Graphics elements and control objects must behave and function consistently on all graphics in all situations
    - Important operator actions with significant consequences will have confirmation mechanisms to avoid inadvertent activation
    - Operator graphics will be designed to minimize user fatigue for operations staff that constantly use these displays

Designing the HMI around these standard principles will deliver graphics applications that have the following attributes:

- The operator's attention is drawn to the most critical information, such as:
    - Urgent and high priority alarms
    - Impending compliance violations
    - Health and safety issues
    - Sub-optimal operating conditions that increase operating costs
- The HMI is designed to eliminate confusion and mistakes by providing consistent, easy to read, intuitive information with the proper feedback
- Operator reaction time is optimized by providing needed information in a simple, logically progressive, performance-oriented display structure

4.2 HIERARCHY

Operator graphics are designed in a hierarchy for progressive disclosure of process detail to handle specific tasks. The purpose of hierarchical displays is two-fold:

- Provide different amounts of operating detail to aid the operator in performing different tasks
- Allow for easier navigation

The hierarchy for process graphic displays is dependent on operator location and responsibility. These levels of display represent increasing levels of complexity and detail to the operator. The disclosure of complexity and detail is meant to represent the operator's mental model of the

process. The hierarchy operates like a tree structure, where lower-level displays are associated with higher-level displays. The following display levels, or types, will be used:

- Level 0 displays provide the operator with IEUA applications wide information.
- Level 1 displays contain facility system overviews. This would represent the operator's total scope of control.
- Level 2 displays contain process unit information and controls. These are the primary monitoring and control displays.
- Level 3 displays contain process unit details. These include more detailed controls for the process unit which may not be used on a day-to-day basis.
- Level 4 displays contain process support information and controls. These are typical for diagnostic screens, set points, interlock lists, startup procedures, or groups of controllers.

Figure 1 shows a sample hierarchy.

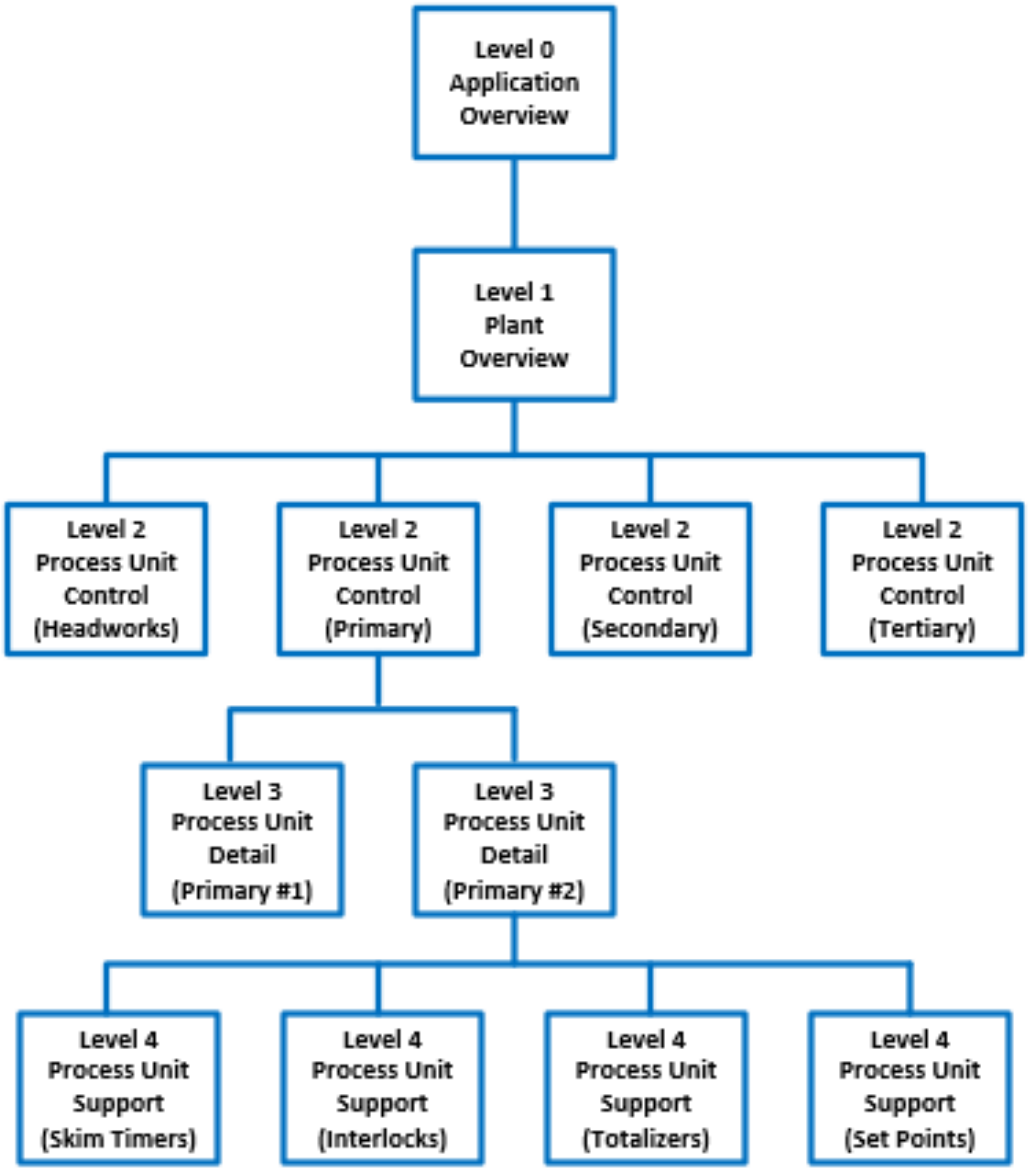

Figure 1: Example Display Hierarchy

Prior to beginning development, the application developer shall hold workshops with IEUA staff to determine a detailed display list, set performance goals for the process displays, and perform task analysis to determine the required control manipulations.

4.2.1 Level 0 Display

The Level 0 display is an Application-wide screen that shows all the controllable plants, sites, or areas within the given application. The Level 0 display is typically the first display

shown when the HMI application opens. From this screen, the operator will navigate to the plant, site, or area that the operator is responsible for (typically a Level 1 display).

Level 0 displays will also clearly depict Agency wide KPIs as defined by IEUA. The definition of elements for this display shall be covered in the graphics development workshops.

4.2.2 Level 1 Displays

The Level 1 overview display will show the broadest view of the operator's scope of control. This is a big-picture view that clearly identifies performance of the process using Key Performance Indicators. This display typically resides on a large console display, but should be capable of being displayed on other displays as necessary.

The Level 1 overview displays generally have the following elements:

- High level KPIs such as safety, environmental, and efficiency
- Values, trends, and deviations of KPIs
- Alarms of the top two highest priorities
- Important calculated parameters and conditions
- Advanced control mechanisms performance and status
- Major equipment status
- Appropriate trends of important process parameters if required
- Abnormal situations, denoting severity

The overview graphic does not represent a process pictorial or P&ID style display. The overview display should make use of embedded trends and moving analog indicators. An example Level 1 overview display is shown in Figure 2. See Appendix C for a larger example.

HMI Style Guide

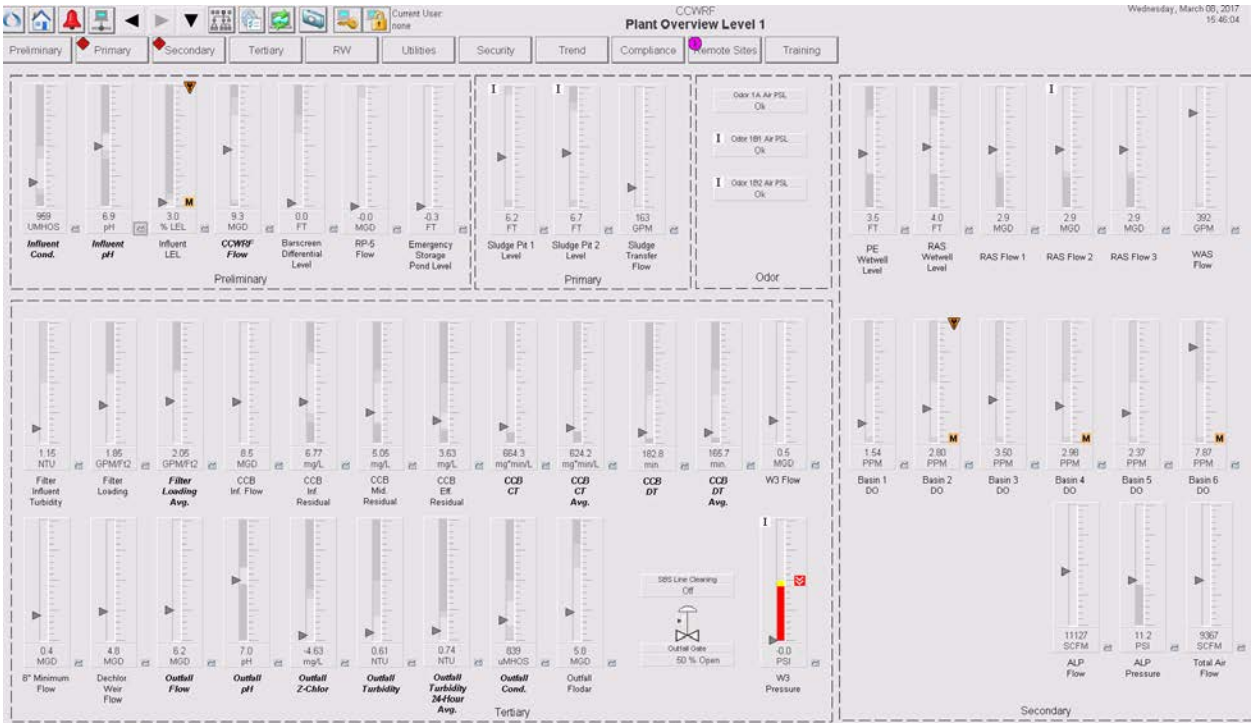

Figure 2: Sample Level 1 Display

4.2.3 Level 2 Displays

The Level 2 graphic display should contain all the information and controls required to perform the majority of the controls tasks for a specific process unit. The Level 2 process displays are key in developing an application that resembles the operator's mental model of the process.

These displays are used for routine tasks such as manipulating controllers, operating pumps, starting blowers, and opening valves. This should be accomplished by using an effective layout with efficient grouping of objects and controls that allow access to control manipulations using faceplates.

An example Level 2 display is shown in Figure 3.

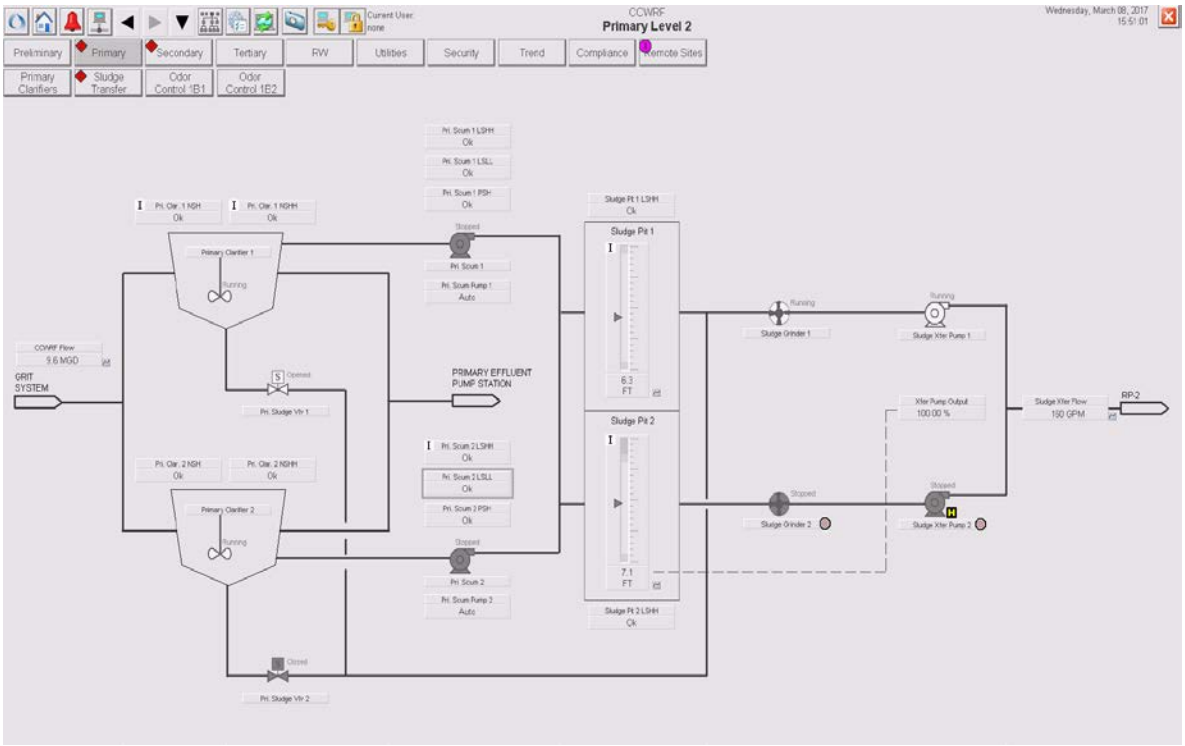

Figure 3: Sample Level 2 Display

4.2.4 Level 3 Displays

The Level 3 graphic display provides a display of the process unit details. This includes all required control loops functions including controllers, indicators, alarms, and status switches defined by the Process Control Narrative. These screens are typically used for detailed investigations and for non-time critical control manipulations.

The displays typically contain:

- Detailed sub-units, individual pieces of equipment, components and any associated instruments and controls
- Pre-built trends for diagnostic context
- Interlock diagnostics and interlock linking, as required by the Process Control Narrative

These displays are normally intended for troubleshooting or for controlling items that are not accessible on the Level 2 display. There may be several Level 3 displays for each Level 2 display.

An example Level 3 display is shown in Figure 4.

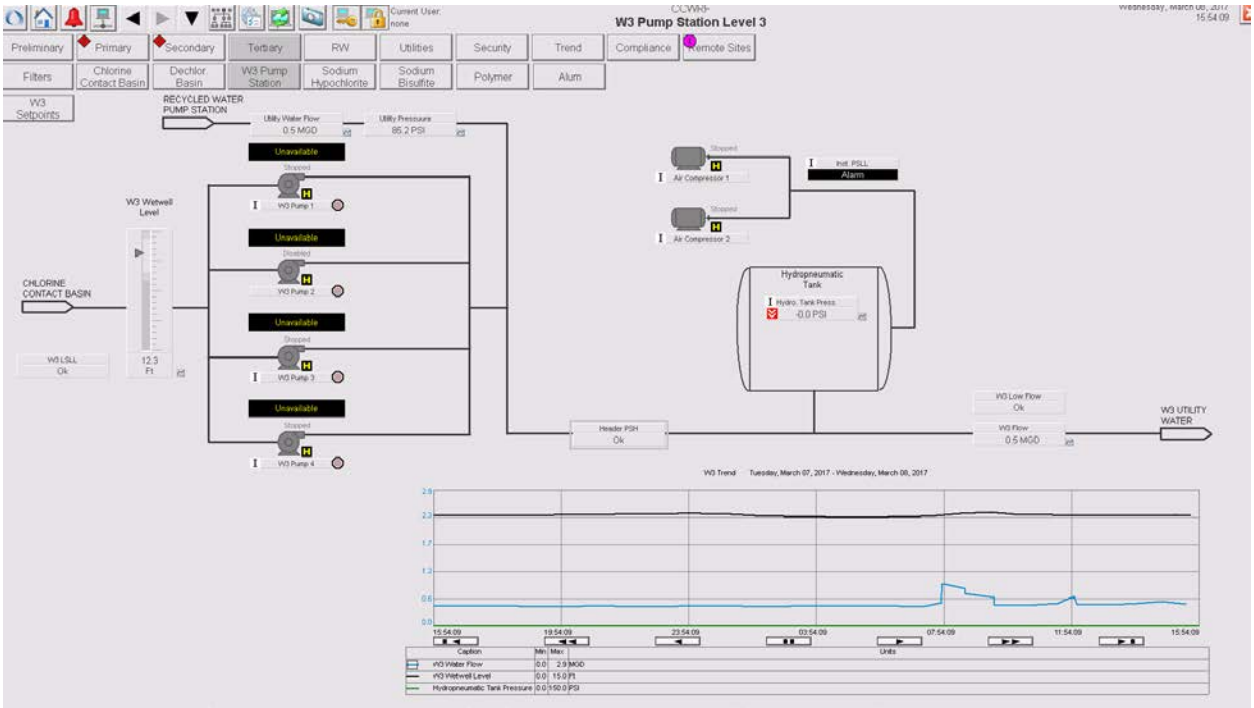

Figure 4: Sample Level 3 Display

4.2.5 Level 4 Displays

The Level 4 displays provide the most detailed information about a subsystem, instrument, or equipment component.

These displays are typically used for:

- Setpoints
- Equipment or instrument information displays
- Grouped controllers for ease of access to common setpoints
- System diagnostics
- Help displays
- Operations manuals
- Alarm and abnormal situation response guidance

These displays vary depending on the needs of the process unit and the complexity of control. See Figure 5 below for an example.

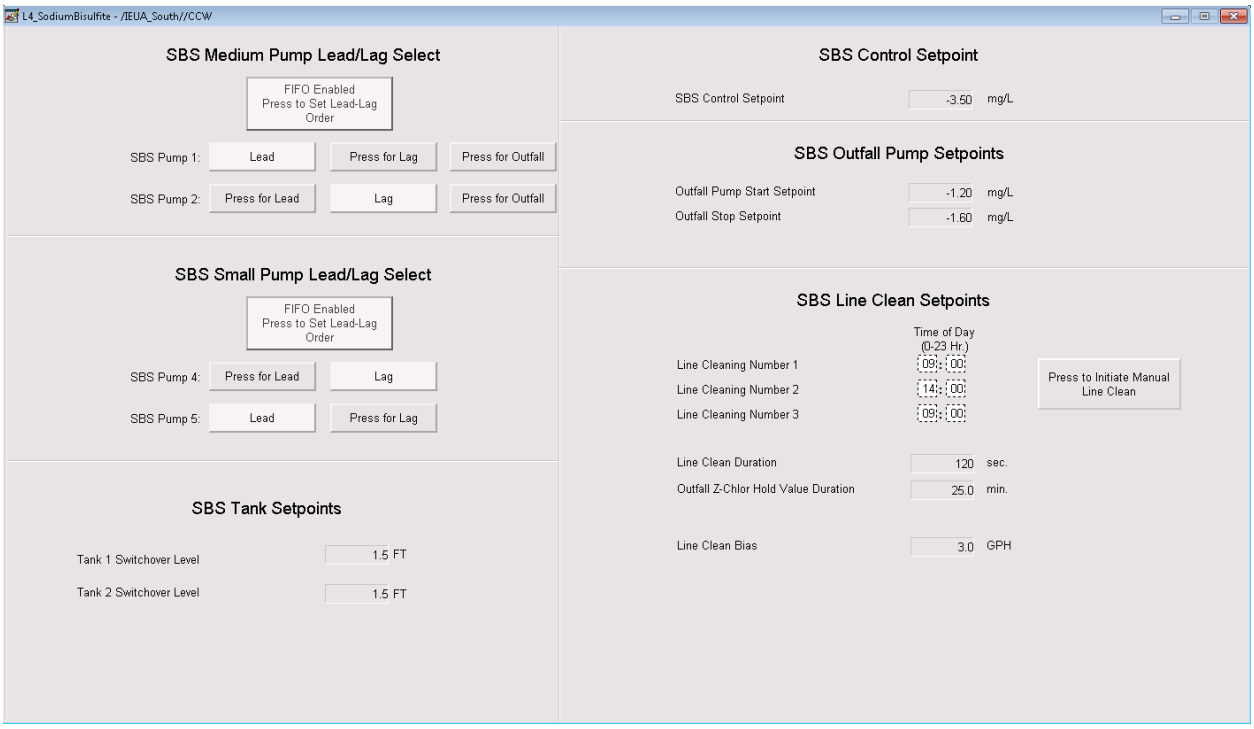

Figure 5: Sample Level 4 Display

4.2.6 Control Faceplates

Control faceplates are used to perform the operator control, adjust tuning, modify configurations, or troubleshoot failures of a single object or piece of equipment. The majority of control faceplates should be directly used from the PlantPAx library. In most cases, these faceplates are already linked and embedded with the PlantPAx process object used to depict the equipment on the process display (e.g. the P_Motor pump symbol links to the P_Motor faceplates provided with the PlantPAx templates).

Faceplates not available from the PlantPAx library shall be designed to function similar to the PlantPAx faceplates and shall be approved by IEUA before development or use. Non-PlantPAx faceplates and supporting global objects must be developed in coordination with AOIs and programming modules developed using the IEUA PAC Programming Standards. The use of common naming conventions, attribute definitions, and logic structures in both the PAC and HMI will ensure a common look, feel, and functionality.

Analog value modifications should use an additional input pop-up that requires positive acknowledgement of input value change. This limits incorrect values from being entered. This is a standard PlantPAx function and should be included on any custom faceplates with analog inputs.

4.3 NAVIGATION

The navigation structure is one of the most important parts of making the HMI application easy to use and intuitive to move between display levels to locate information and control the process. The navigation structure shall be simple and flat, allowing for movement between any two screens in three or fewer clicks.

The navigation structure utilized will be based on the PlantPAx HMI framework. The application will use an application header and a horizontal navigation bar with two levels of navigation buttons. A cutout view of the header and navigation bar is depicted in Figure 6. A full-size depiction is included in Appendix C. HMI Style Guide

Figure 6: Header and Navigation Bar

The top row of buttons and text represents the application header. The application header contains the following:

- Level 0 system wide display button
- Level 1 plant, site, or area overview display button
- Alarm summary display button and alarm indicator (Grayed out and inhibited at Level 0)
- SCADA system status button and indicator
- FactoryTalk quick navigation buttons (forward, back, and history)
- Display map button
- Administration button
- Screen refresh
- Login buttons and information
- Current display name
- Date and time

The application header is a standard component of the IEUA library of global objects. The Integrator must use the IEUA application header.

The middle row contains a horizontal bar of navigation links to:

- All Level 2 displays for the plant, site, or area

- Any plant wide, or preconfigured trends, required for direct access by IEUA
- Other critical system displays identified during the graphics workshop

The bottom row will present a horizontal bar of navigation links to the associated Level 3 displays. For instance, when the Level 2 display for Chemicals is selected, the bottom layer navigation bar will show all Level 3 display links for the Chemicals process unit (i.e. Chlorine, Bisulfite, Alum, and Polymer).

Both the top and bottom navigation bars shall identify the currently selected display to give the operator immediate indication of where the operator is in the overall hierarchy. The navigation buttons for the current display will be highlighted in gray, as well as, the higher levels associated with that display. For instance, if the Chlorine Level 3 display is selected, the Level 3 navigation button for Chlorine and the Level 2 navigation button for Chemicals will be highlighted. See Figure 7.

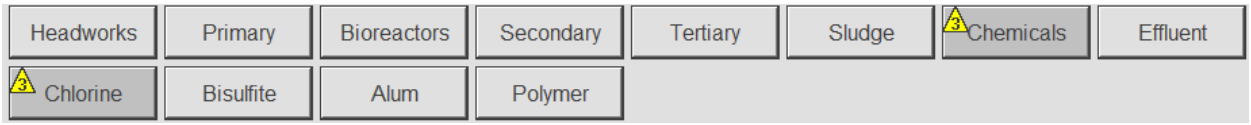

Figure 7: Navigation Bar

Each Level 2 and Level 3 navigation link shall identify the highest alarm severity contained in that process unit, or sub-unit, using the alarm indication symbols shown in Table 4.

In addition to the navigation bar, the built-in FactoryTalk View forward, back, and history buttons shall be used to enable quick navigation between recently viewed displays. This is contained on the application header. The navigation history shall be configured to hold ten (10) previous screens.

4.3.1 Navigation Targets

Navigation targets are used to identify objects, symbols, and process line arrows that, when clicked, will link to another display or bring up a faceplate for control. Navigation targets should indicate the presence of a link when the mouse is hovered over the object. On process objects that link to faceplates, the navigation target should highlight the object with a gray outline.

Process lines that use arrows to link to other Level 2 or Level 3 displays should be shown differently than process lines that do not link to other displays. Process arrows should use the appropriate symbol for linked, or unlinked, process lines from the IEUA HMI library.

4.4 LAYOUT

The layout of the console and process displays is another important part of the overall High Performance HMI approach. Layout methods must be strictly enforced to ensure the consistent look and feel of all applications throughout the Agency's sites. During the graphics workshops, the Integrator shall verify the console and process display layout methods with IEUA prior to development.

4.4.1 Control Room Console Layout

The control room console consists of large wall displays and smaller operator screens. The console creates the integrated control room environment that provides the operator with a holistic view of the process, as well as the detailed view of specific process units for monitoring, control, and troubleshooting.

The large screen wall displays are typically sized from 42 to 60 inches in size with a 16:9 aspect ratio supporting full 1920 by 1080 high-definition graphics. In most cases, the control room will have four or more large displays to support the following types of displays:

- Plant and/or Enterprise Overview
- Alarm Summary
- Plant KPIs
- Plant Trends
- Security, weather, or other general purpose data
- Any Level 2 or Level 3 display for monitoring

The smaller screen displays are typically 24 inches in size with a 16:9 aspect ratio supporting full 1920 by 1080 high-definition graphics. There are typically two to four small screen displays supporting operating displays for FactoryTalk View and for access to IEUA business network computers and resources. The smaller screen operating displays are generally used for:

- Level 1, 2, and 3 operating displays
- Alarm summary and history
- Ad hoc trending

It is important that the application be designed to support this type of screen arrangement. In general, the FactoryTalk View application should be sized to operate as a single 1920

by 1080 display using multiple client sessions to fill each separate display with the content required for large or small displays. This provides the simplest application maintenance and development approach while allowing for flexibility in the arrangement of displays. The Integrator shall confirm the specific layout of the control room environment and application development method with IEUA prior to development.

4.4.2 Process Display Layout

The process display layout defines the overall screen size and arrangement for a consistent look, feel, and functionality. The process display layout is applicable to all Level 1, 2, and 3 graphics.

The Integrator should request the IEUA display framework prior to development. This framework includes global objects and template displays for use by the Integrator in developing the application. Any modifications to the IEUA framework must be approved by IEUA.

The display layout, or framework, consists of an application header, navigation bar, and process graphic area. Figure 8 shows the general arrangement. The overall display size is 1920 by 1080, in pixels.

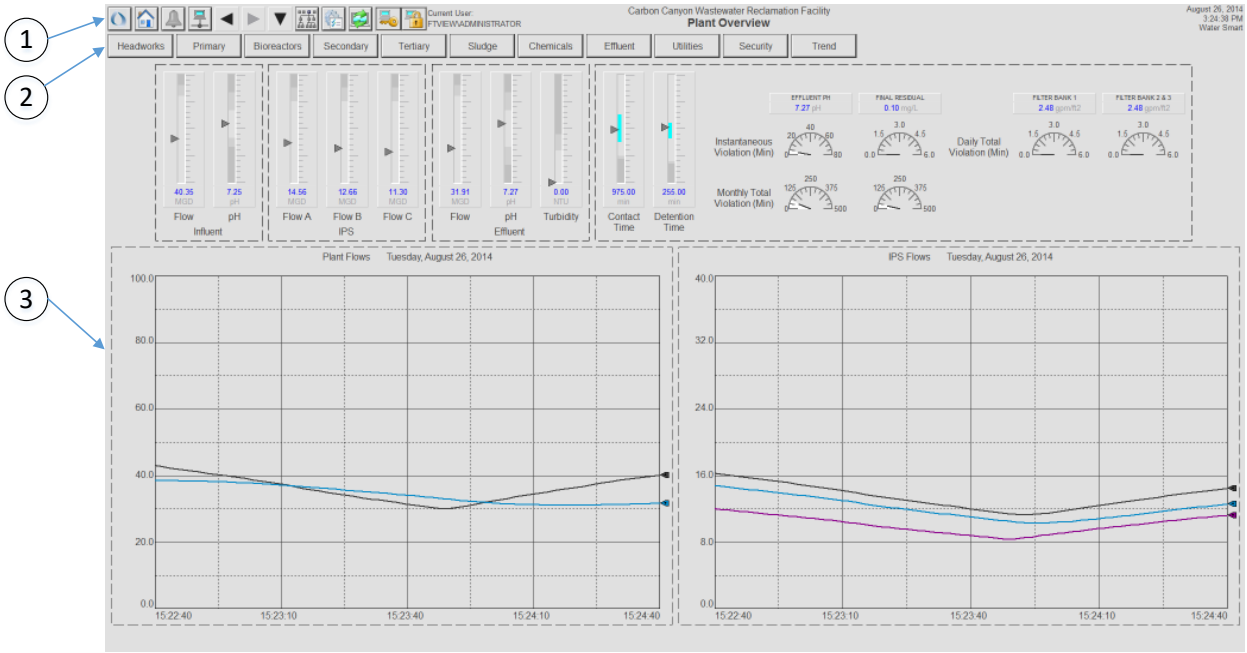

Figure 8: Process Display Layout

Table 3 lists the general size assigned for the display components. The Integrator should use the IEUA framework template for correct placement and sizing of the header and navigation global objects.

Table 3: Process Display Layout Sizing

1	Application Header	1920	45
2	Single Navigation Bar (Level 1)	1920*	45
	Dual Navigation Bar (Level 2 & 3)	1920*	90
3	Process Display Area (Level 1)	1920	990
	Process Display Area (Level 2 & 3)	1920	945
* Maximum width, may be smaller based on number of displays			

4.5 DISPLAY CHARACTERISTICS

Graphic displays will have a consistent look and feel. In order to maximize the use of built-in capabilities and maintain a common look and feel, the PlantPAx HMI library of global objects and faceplates will be used in coordination with the IEUA symbol library as the basis of development.

4.5.1 Use of Color

Color usage is restricted, achieving display consistency and drawing attention to important situations. Color choices and their use in graphics are applied consistently throughout the display hierarchy. Color should never be the sole differentiator of important information. Color differences will be combined with shapes or text to convey the equipment state or condition.

Background Color:

A muted background color has been shown to effectively address problems of glare, contrast, color interference, and fatigue on the eye. The same background color will be used for all graphic displays.

Foreground Colors:

A minimum number of foreground colors will be used for graphic displays. Foreground color is used to draw an operator's attention to an abnormal situation or alarm. Bright, intense, saturated colors are used to quickly draw the operator's attention to abnormal conditions or alarms.

If the process is running correctly, the process graphic will display little color.

All use of color is standardized and should be rigorously followed. Each color will be used to indicate only specific conditions. For example, if red is used for an alarm color, it will not be used for any process graphic objects, text, or elements. Specific hue and saturation is defined in the Style Guide found in Appendix C. HMI Style Guide

Process lines and outlines of vessels and equipment will be dark gray. Process line emphasis will be provided by using varying line thickness with primary process flows using the heaviest lines.

Color will not be used to indicate the type of material (i.e. RAS, natural gas, potable water). It is difficult to apply consistently on all displays and provides a distraction to the operator. Material type will be identified with static text.

Color Blindness:

Colorblindness is a common phenomenon. The most problematic color pairs are red-green, green-yellow, and white-cyan. Therefore, foreground colors used to indicate abnormal conditions will be used in conjunction with text, shape, and filled or unfilled status.

4.5.2 Lines, Vessels, and Static Equipment

Process Lines:

- Process lines should be dark gray.
- Thickness should be used to differentiate between major and minor lines.
    - Main process lines should be 3 pixels in width
    - Secondary process lines should be 1 pixel in width
- Use arrows sparingly to indicate flow direction.
- Use static text to identify material when needed.
- There will be two different line types, solid (process flows and equipment) and dashed (used for grouping or separating objects on the graphic display).

Process Vessels:

- Vessels should be depicted as two dimensional symbols.
- The interior of the vessel should be uniformly shaded without gradients and be the same color as the background color.
- The vessel should be outlined in a dark gray line 1 pixel in width.
- The vessel's shape should be shown, but without much detail.

- The size of the vessel should be relative to the process importance of the vessel and, when practical, related to the physical size.

Process Flow:

- Process flows should be depicted consistently.
- Process flows should be from left to right.
- Recycle flows may be depicted logically right to left.
- Vapors generally flow up and liquids flow down unless directly associated with a pump or compressor.

Process lines should enter and leave the screen in consistent ways and should be neatly arranged to allow for easy recognition. Entry and exit points used as navigation targets should be presented and differentiated from non-navigation points.

4.5.3 Text

The display of static text on process graphics and other displays will follow the following principals:

- The amount of text should be minimized but not eliminated. Text will be used to identify items when their placement or shape does not make their identity obvious.
- Text on process graphics will be dark gray.
- Text on alarm or event displays will be the color associated with the priority.
- All display lettering use non-serif fonts (Arial).
- For isolated words, titles, short labels, and equipment designations, use all uppercase. For all other instances, use mixed case lettering to improve legibility.
- Text size will be standardized for operator console displays.
- Ensure consistency with abbreviations. A glossary of abbreviations is included in Appendix B.

Alarm Management Standard

4.5.4 Values

The display of live values should be shown differently than static text. The following rules will be followed.

- PlantPAx graphic will be used for live values, containing description, value and units of measure.
- Black text on white background for values that can be adjusted by the operator.
- Leading zeros will not be displayed except for fractional values.
- In tables, numbers will be aligned by decimal points. Extensive use of tables is discouraged.
- When a value has the focus of the pointing device, the status should be indicated by a gray rectangle surrounding the value.
- The number of decimal places to be displayed shall be defined in the PCN's.

4.5.5 Analog Indicators

Moving analog indicators provide users with a means of quickly ascertaining if a process variable is in a normal operating range, approaching an alarm state, or in an alarm condition. Figure 9 shows two examples of a vertical analog indicator at two operating conditions. The indicator on the left shows the process variable is within the normal operating range. The indicator on the right shows the process variable in a priority two high alarm condition.

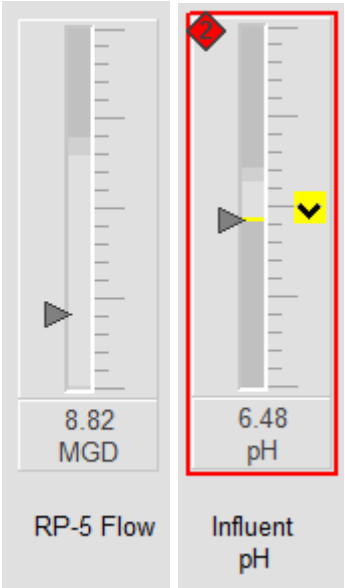

Figure 9: Typical Analog Indicator

In the example, 8.82 is a normal flow rate and 6.48 is a low pH condition. The gray shaded areas indicate the High and Low alarm range. The darker gray shaded areas indicate the High-High and Low-Low alarm range.

4.5.6 Objects and Symbols

Standard shapes and sizes for vessels, pumps, heaters, blowers, etc. will be provided in the PlantPAx HMI library and the IEUA HMI library. The PlantPAx objects and symbols will be used to the greatest extent possible.

All objects and symbols will be consistent so they can be recognized without the use of labels. If labeling is required, text will be low contrast.

Vessel Levels:

Vessel levels will be shown with a level indicator shown inside the vessel. The overall height of the level will correspond to the range of the instrument installed on the vessel. The current stored volume of the tank shall also be shown in the vessel.

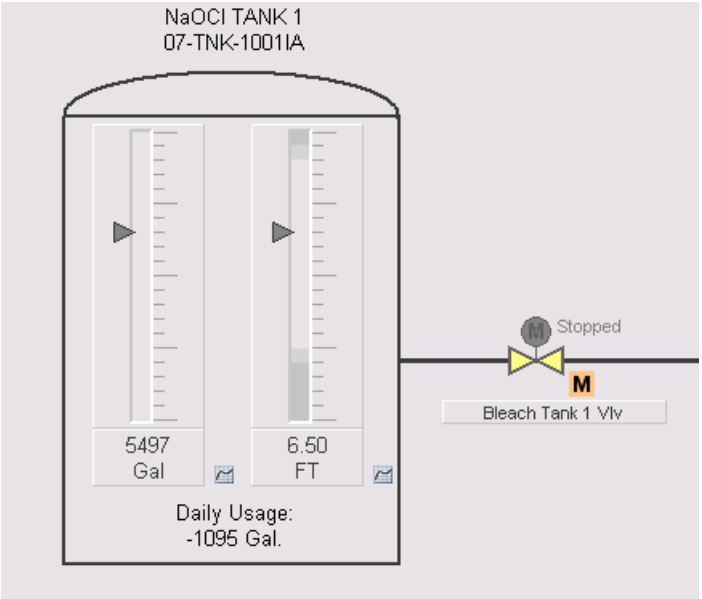

Figure 10: Typical Vessel

In the example shown in Figure 10, the vessel level (6.5 FT) is shown. This could also be feet or gallons. The darker gray lines marks in the middle of the indicator represent level alarm points. If the vessel level goes into alarm condition an alarm indication will appear on the graphic. This is typical for tanks, wet wells, and sumps as well.

Control Valves:

Motor operated valves will be shown using a white fill for opened, dark gray fill for closed, and gray for mid position as shown in Figure 11. Valve alarms will be identified by standard alarm indication methods found in Section 3.6.2.

Figure 11: Motor Operated Valve Symbols

Modulating valves will be shown dark gray filled when closed. When the valve is open, it will be shown as the example in Figure 12. The valve will be shown with a white fill and the percent open indication.

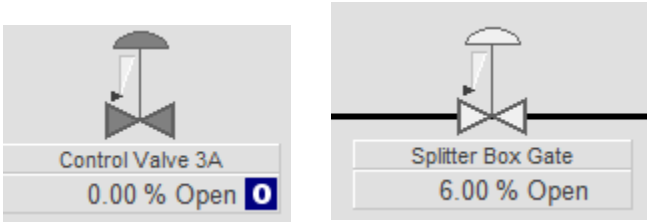

Figure 12: Modulating Valve Symbol

Pumps:

Pump status will be shown using a white fill when running and dark gray fill when stopped, as shown in Figure 13. Variable speed pumps will be shown similar with the percent speed shown below the pump. Different types of pumps will be identified by their equipment label. Pump alarms will be identified by standard alarm indication methods found in Section 3.6.2.

Figure 13: Pump Symbols

4.5.7 Controllers

Three general types of process controller objects (i.e. PID controllers) are available for graphic displays from the PlantPAx library, however the agency uses:

- A simplified controller object which will display the controller process variable (PV), setpoint (SP), output (CV), and controller mode (Auto, Manual, or Cascade).

See Figure 14 for examples.

All of the controller objects will use consistent colors and text for the process values, controller outputs, and setpoints. See the HMI Style Guide in Appendix C.

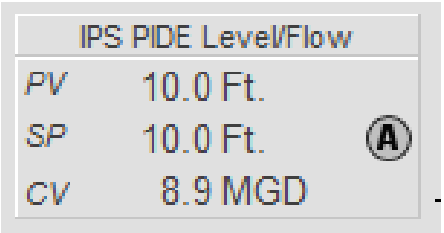

Figure 14: Typical Analog Controllers

4.6 ALARMS

The purpose of the alarm system is to direct the operator's attention to the facility conditions requiring timely assessment or action. Each alarm should alert, inform, and guide the operator, have a defined response, and allow the operator adequate time to carry out the response.

Alarms should be prioritized based on severity of consequence considering safety, environmental, economic factors, and the time available to take corrective action.

Four priorities, or severities, will be utilized. Two severities will be used for operator alarms and two severities for diagnostic information. The priorities and their general definitions are as follows:

- *Urgent:* Immediate operator action required (e.g., process shutdown, severe equipment damage, health, safety, or environmental violation imminent, or costly economic impact).
- *High:* Rapid operator action required (e.g., process shutdown possible, off-spec process condition, emergency level alarm or violation imminent).
- *Medium:* Operator action is required, but the process is still in steady state operation.
- *Low:* Diagnostic alarms requiring maintenance action, or operator action to generate a work order.

The following sections will discuss the philosophy of how alarms are presented to operators.

4.6.1 Alarm Behaviors and Indications

Any system value in alarm should be shown clearly and consistently. The methods used to for this standard are defined in the following sections.

- Color is related to alarm priority. Every alarm will have a unique color that will not be used for any other purpose on any graphic display.

- Unacknowledged alarms will be distinguished from acknowledged alarms. Unacknowledged alarms will blink.
- If more than one alarm is in effect on a value, only the highest priority alarm should be indicated.

A combination of visual indications shall be used to distinguish the following required alarm states:

- Alarm inhibit
- Return to normal
- Unacknowledged alarm
- Acknowledged alarm

Alarm Inhibit

An inhibited alarm is an alarm that has been suppressed by the PAC program, disabled by maintenance, or shelved by the operator. An inhibited alarm will not change the border or label color, but will display the inhibit symbol, shown in Table 3.6-1, to notify an operator that one or more alarms will not be displayed or annunciated.

Return to Normal State Indication:

The return to normal state visual indication will use a white border and label background with a white alarm bell symbol, shown in Table 3.6-1.

Unacknowledged Alarm State Indication:

The unacknowledged alarm state visual indication will use the alarm symbol and border and label color of the highest active alarm severity. The alarm border and label will blink to draw operator attention.

Acknowledged Alarm State Indication:

The acknowledged alarm state visual indication will use the alarm symbol and border and label color of the highest active alarm severity. The alarm border and label will not blink.

4.6.2 Graphic Display Indication Methods

On process graphic displays, alarms will be indicated by unique colors, text, and shapes. For the alarms priorities and alarm states in use, the following indication methods (Table 4) will be used:

Table 4: Alarm Indicators

I	No change in color	Alarm inhibited
	White	Return to normal (no alarm), but a previous alarm has not been acknowledged.
4	Blue	Low severity
3	Yellow	Medium severity
2	Red	High severity
1	Magenta	Urgent severity

The symbol images for alarm inhibit and return to normal are part of the PlantPAx library of images. The four alarm symbols representing urgent, high, medium, and low are IEUA specific symbols that must be updated from the IEUA library of images.

4.6.3 Alarm Summary Display

The alarm summary display provides a list of active alarms and alarms that have returned to normal without being acknowledged. The display should be developed from the PlantPAx alarm summary display template. The display shall be configured to provide the following information (Table 6) for each alarm:

Table 6: Alarm Summary Details

Priority	Priority	90	Left	Icon + Text
Alarm State	Alarm State	150	Left	Icon + Text
In Alarm Time	In Alarm Time	165	Left	Time + Short Date
Acknowledge Time	Acknowledge Time	165	Left	Time + Short Date
Out of Alarm Time	Out of Alarm Time	165	Left	Time + Short Date
Message	Message	430	Left	Text
Group	Group	250	Left	Text
Alarm Name	Alarm Name	430	Left	Text

The alarm summary display will provide the following functions:

- sorting of alarms by chronological order (reverse chronological order by default)
- sorting of alarms by priority
- individual acknowledgment of each alarm
- drop-down menus configured to allow filtering alarms by process area
- navigation from the alarm to the associated faceplate

The default sort order for the alarm summary shall be:

1) In Alarm Time, descending
2) Acknowledge Time

The default filter should be configured to show all urgent, high, and medium priority alarms. Low priority, diagnostic alarms, will be normally filtered, but can be displayed by viewing all alarms, or by using a low alarm priority filter.

Refer to Appendix C for color assignments and font styles.

4.6.4 Alarm History Display

The alarm history display provides a list of all alarms and alarm state transitions that have been logged to the historical database. The display should be developed from the PlantPAx alarm history display template. The display shall be configured to provide the following information (Table 7) for each alarm:

Table 7: Alarm History Details

Priority	Priority	90	Left	Icon + Text
Alarm State	State	150	Left	Icon + Text
Event Time	Event Time	165	Left	Time + Short Date
Message	Message	450	Left	Text
Group	Group	240	Left	Text
Event Source	Alarm Name	350	Left	Text
User Name	User Name	100	Left	Text
User Comment	User Comment	260	Left	Text
Tag 1 Value	Tag 1 Value	110	Left	Number

The default sort order for the alarm history shall be by event time in descending order. The default filter should be configured to show all events.

4.6.5 Alarm Management Functions

The alarm management functions will utilize the integrated features of the PlantPAx AOIs with the standard FactoryTalk Alarms and Events features to provide the following alarm management functions:

- Suppression by design
- Maintenance disable
- Shelving with un-shelf timer
- Acknowledge single alarm

- Acknowledge current page of alarms (one page at a time)
- Acknowledge with comments
- Viewing of alarm details
- Running of alarm commands to open associated Level 2 or Level 3 displays

The alarm explorer display will be used to allow the operator easily filter and interact with alarms. The alarm explorer will be used to simplify the process of enabling/disabling, shelving/un-shelving, and viewing alarm comments within the HMI.

The alarm system will also include a display of all shelved alarms with filtering capabilities to enable immediate access to the list of shelved or suppressed alarms.

All management functions and displays should be configured from PlantPAx display templates utilizing colors and fonts from the Style Guide found in Appendix C. The alarm management displays and functions should maintain a consistent look and feel with all other displays.

4.7 TRENDING

All trending displays should utilize the TrendPro or TrendX tool as determined in the graphics workshop. The trend object displays real-time data and data from FactoryTalk Historian Site Edition (or FactoryTalk View Site Edition data logs where FactoryTalk Historian is not available). The trend object should be configured to provide extensive, flexible run-time control including: adding pens, toggling between isolated and non-isolated graphing, specifying unique line settings, and printing chart data.

On trends requiring a legend, the legend shall be provided with the following information as a minimum:

- Pen tag descriptions and colors
- Pen units
- Pen maximum and minimum values

Faceplate trends from the PlantPAx graphic faceplates will use the default configurations from the library. All other trends shall be configured as described in this section and in the following sub-sections.

Trending requirements will be determined during the graphics develop workshops. In general, the appropriate use of trends is recommended to enhance the operator's awareness of the process and provide the context often missing from most displays. In addition, the Integrator may need to

configure datalog files or Historian references to retrieve sufficient data for trending based on the requirements of the workshops.

4.7.1 Historical Embedded Trends

Historical embedded trends with live update shall be pre-configured with a trend title, time scale, value scale, current values, and configured for continuous scrolling with a default time span of 24 hours or as determined in the graphics workshop. These trends will use TrendPro or TrendX to be decided in the graphics workshop. The time span shall be adjustable, as needed. Other configuration options must be specifically approved by IEUA.

4.7.2 VantagePoint Embedded Trend

A VantagePoint Embedded Trend shall be configured as a Level 1 Display that allow the operator to add any point in the system to the trend for troubleshooting or monitoring. There should be one VantagePoint Embedded Trend for each application.

Replaced by AVEVA PI System

4.7.3 Real-time Embedded Trends

Real-time trends are typically only used on local OIT (PanelView) displays where access to the FT Historian is not available. Real-time trends shall be configured with a trend title, legend, time scale, value scale, and configured for continuous scrolling with a default time span of one (1) hours. The time span shall be adjustable and include mechanisms to allow for panning, zooming, and scrolling. Other configuration options must be specifically approved by IEUA.

4.8 SECURITY

The SCADA system will use the integrated security system provided by the FactoryTalk Directory, FactoryTalk View Studio, and the Windows Active Directory Domain Services. The SCADA system will have multiple security levels to allow users different monitoring and control access. FactoryTalk View SE shall be directly linked to Windows-based user accounts with a group assigned with the FactoryTalk View SE application for users to be added for specific access rights. The PlantPAx objects and faceplates have security built into them based on FactoryTalk View SE security codes.

The SCADA security system shall be configured to provide the following minimum options:

- Continuously display current user logged on to the system on the HMI header
- Log all security events (user log-on and user log-off) to a database
- Assign all events in the events database to logged on user(s)
- Each user should have a separate login
- Automatic log-off by inactivity timeout or by date/time
- Allow a preset number of log-on attempts before sending a notification for an invalid log-on attempt

~~The use of groups and associated security codes is defined in Appendix D.~~

4.9 SYSTEM CONFIGURATION TOOLS

The FactoryTalk View and PlantPAx configuration tools allow for simple, repeatable HMI configurations by multiple developers across many applications. The use of these tools is required to meet the IEUA standards.

4.9.1 PlantPAx Online Configuration Tool

The PlantPAx Online Configuration Tool is a Microsoft Excel spreadsheet that provides a quick and easy way to configure all AOI parameters for a given PAC program.

The Integrator shall utilize this tool to configure and document the AOI parameters. The final configuration shall be delivered as part of the application documentation and will assist is graphics workshops and development activities.

4.9.2 PlantPAx Alarms Builder

The PlantPAx Alarms Builder and Tag Data Edit Tool is used to link the PAC AOI configurations to the FactoryTalk Alarms and Events configuration.

The Integrator shall use this tool to develop an alarm import file for the FactoryTalk Alarm and Events Server. The import file requirements for each application will be developed during the Alarming workshop. The final Alarm Builder spreadsheet shall be delivered as part of the application documentation.

4.9.3 PlantPAx Color Change Utility

The PlantPAx Color Change Utility shall not be used to modify the default color palette. PlantPAx standard color palette shall be used.

SECTION 5 DELIVERABLE

5.1 SUBMITTALS

Verify Technical Specifications for each Project

The following submittals shall be made to IEUA by the application developer:

- Two soft copies of all developed software and documentation shall be submitted at the end of each SCADA design stage (25%, 50%, 75%, final as-built version).
    - Copies of all displays provided in PDF
    - Backup of all HMI server applications using Distributed Application Manager backups.
    - Historian Tag Configuration spreadsheets
    - Report design narratives and report files (Excel, RDL files, stored procedures etc…)
    - VantagePoint/Asset Framework model design documents and files
    - PlantPAx Alarms Builder Tool spreadsheets
    - Training Documents for Operations, Maintenance, and SCADA staff.
- Licenses
    - All Operating System Licenses
    - Rockwell Licenses
        - FactoryTalk View Licenses
        - FactoryTalk HMI server licenses
        - FactoryTalk Historian licenses, interface licenses
        - VantagePoint client licenses
        - AssetCentre licenses
    - ~~OSISOf~~t PI Licenses
    - Thin Manager licenses
    - VMware licenses
    - VEEAM licenses for backup

Report Definition Language (RDL) files

AVEVA

Veeam is a data protection software company

Inland Empire Utilities Agency
A MUNICIPAL WATER DISTRICT

Section 4-Electrical and I&C-Appendices

iii SCADA Standards

APPENDIX B - ALARM MANAGEMENT STANDARD

APPENDIX B - ALARM MANAGEMENT STANDARD

APPENDIX B

ALARM MANAGEMENT STANDARD

Inland Empire Utilities Agency
A MUNICIPAL WATER DISTRICT

Westin
Passion for Improving Performance

REVISION	DATE	DESCRIPTION OF REVISIONS	REVISED BY
---	8-21-2016	Revised based on the comments and lesson learned from CCWRF	Kevin Wang
--	11-23-2016	Revised based on the comments and lesson learned from CCWRF	Kevin Wang
	10/10/2019	ISS Updates	ISS

SECTION 1

INTRODUCTION

1.1 PURPOSE

The purpose of the Alarming and Events Standard is to establish a uniform approach to alarm and event management in the SCADA system and to ensure that IEUA (Agency) staff can respond appropriately when abnormal situations occur at their water facilities.

1.2 SCOPE

This Standard covers the general methodology for alarm and event management, provides an overview of the various alarm and event types, and describes how alarms and events are monitored and displayed from SCADA. The specific alarms and events required for a facility are not covered in this document and are to be defined during the preliminary and detailed design phases in consultation with the Agency and captured in the Process Control Narrative (PCN).

1.3 PAC AND HMI PROGRAMMING ENVIRONMENT

IEUA utilizes the Rockwell Automation's PlantPAx software suite. This suite consists of using specific PAC programming structure and AOI's as well as corresponding HMI system architecture and object libraries.

All alarming shall utilize the current PlantPAx pre-defined alarm functions and requirements within each of the specific PlantPAx objects. The integrator shall confirm the specific library version from IEUA prior to starting work.

1.4 ALARM & EVENT DEFINITIONS

1.4.1 Alarm Definition

An alarm is the visual and/or audio annunciation that a piece of equipment is in malfunction, process malfunction or in an abnormal condition. Alarms require an operator response that is governed by alarm prioritization. Alarms are prioritized based on the consequential impact of the malfunction or abnormal condition to regulatory compliance, health and safety, and process criticality. The Agency Water Supply Division's standard approach to alarm priority is discussed in section 1.5.3 Alarm Prioritization.

1.4.2 Event Definition

Events are all signals that are not classified as alarms and do not require attention from Operations and Maintenance staff. Events pertain to status information

A signal can only be classified exclusively as either an alarm or an event, not both. An event represents a change of state (process, equipment, or system). The following are examples of events: I/O point change of state; changes to control setpoints, duty selection, reset, etc.; enabling/disabling of alarms; equipment Out of Service; FT user logging in/out; pump start/stop; valve open/close, etc.

1.4.3 Alarm Reset Definition

All alarms are latched within the PAC logic. An alarm latch is retained until reset by the Operator from an HMI. Depending on the alarm, a device that is returned to a safe or normal condition in the field may not automatically unlatch the alarm. This ensures the Operator is aware of the failure.

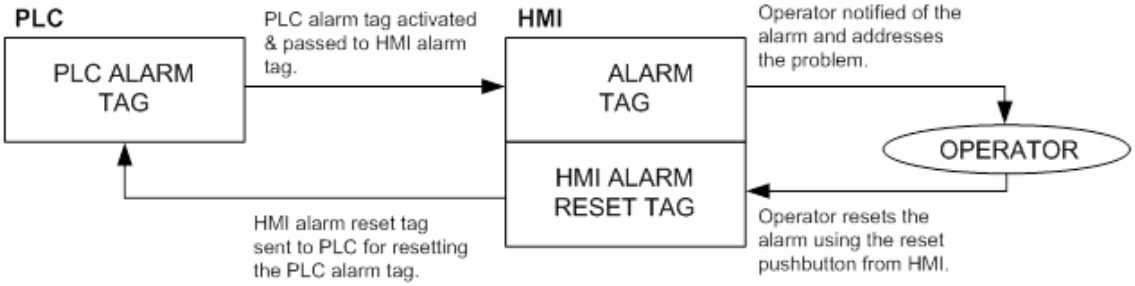

1.4.4 Alarm Acknowledge Definition

Alarms are displayed as text on the HMI Alarm Summary screen. Some HMI objects have animation associated with them and indicate that an alarm is present. When an alarm occurs, the alarm indication animation begins to flash. The alarm indication will continue to flash as long as the alarm goes unacknowledged (even if the alarm condition clears). Alarm Acknowledgement stops the alarm animation from flashing and holds the animation in a solid steady state. All alarms require operator interaction (usually an HMI reset) to clear.

Depending on the Priority of the alarm, Alarm Acknowledgement is also used to control the clearing of Local Alarm/General Alarm Panel lights and horns. PA annunciations are also silenced via the Alarm Acknowledgement. See section 1.5. ALARM AND EVENT METHODOLOGY for further details.

1.4.5 Alarm Shelving Definition

Despite best efforts, events (e.g. instrument out of calibration or in maintenance) will still occur that will trigger nuisance alarms. Operation staff members are usually aware of the source and reason for the nuisance alarms. In this circumstance, operators with the

appropriate privileges must have the ability to temporarily disable (shelve) nuisance alarms.

1.4.6 Alarm/Event Area Definition

Each alarm or event tag is assigned alarm areas. These areas are used to filter alarms. Alarm groups are created to follow the Process Control Narrative structure. For example, Primary treatment is a major group for Carbon Canyon and has sub-groups for Primary Clarifiers and RAS/WAS.

1.4.7 Alarm Filter Definition

Alarm filtering is provided for all alarms where needed. Alarms can be filtered by process area or site, priority and device. Filtering is based on the defined alarm/event areas and displays the current alarms for the filtered selection. Refer to the HMI Standard for additional information on alarm summaries and filtering selections.

1.5 ALARM AND EVENT METHODOLOGY

1.5.1 General

The SCADA system has four (4) levels of alarm priorities: Priority 1, 2, 3, and 4. Dependant on the priority of the alarm, there will be a visual and/or audible presentation for each alarm.

The visible representation is as follows:

- on each HMI screen where the associated device is located, including the associated navigation buttons.
- on each device popup display.
- on the applicable Alarm Summary Screen.
- in the alarm/event log file.
- in the Historian (Alarm and Event Database).
- on the interface panel of the physical device (if applicable).
- on the Local and/or General Alarm Panel (if applicable).

The priority for each alarm shall be documented in the PCN, and configured in the FT system and the PAC logic utilizing the PlantPAx standard library. The FT, PAC logic, and field devices work in conjunction to create the visual and audible cues for each alarm.

Alarms can be acknowledged individually, by alarm page or all. See HMI standard for alarm acknowledgment information.

Some alarms can be disabled via the HMI on an individual basis using device popups. See HMI Standard for alarm enable/disable specifics.

All alarm threshold comparisons and status flags shall reside in the PAC and are passed to the HMI.

1.5.2 PCN Documentation

Each alarm shall be defined and documented with the applicable PCN. Each alarm shall be documented in the PCN appendix as an individual row.

1.5.3 Alarm Prioritization

1.5.3.1 Priority 1

A Priority 1 (P1) alarm is the highest priority alarm in the SCADA system and is defined as any alarm that poses an immediate threat to human life and safety or poses an immediate risk to reliable process control or property. When a P1 alarm is triggered, personnel are required to respond immediately and take reasonable actions in order to protect public health and safety and to prevent or minimize personal injury or damage. This may involve prompt evacuation of the affected area and deployment of trained personnel to correct the situation.

All priority 1 alarms require HMI presentation and email notification at all times to both on shift and off shift pagers/cell phones.

Priority 1 alarms consist of PlantPAx alarm severities of 751 through 1000. The PlantPAx alarm severity of 777 is reserved for Priority 1 system alarms.

1.5.3.2 Priority 2

Priority 2 (P2) alarms are defined as process-related alarms, which represent an impending impact to service levels or cost. When a P2 alarm is triggered, trained personnel are able to respond with less urgency.

All priority 2 alarms require HMI presentation.

Priority 2 alarms consist of PlantPAx alarm severities of 501 through 750. The PlantPAx alarm severity of 555 is reserved for Priority 2 system alarms.

1.5.3.3 Priority 3

Priority 3 (P3) alarms are configured, but not used.

Priority 3 alarms consist of PlantPAx alarm severities of 251 through 500.

1.5.3.4 Priority 4

Priority 4 (P4) alarms are defined as maintenance alarms. P4 alarm definition is configured, but not used.

Priority 4 alarms consist of PlantPAx alarm severities of 1 through 250.

1.5.4 Alarm Annunciation

The annunciation for alarms is determined by the priority. The Agency utilizes HMI on screen alarm presentation and email notification for alarm presentation and annunciation. The specific annunciation requirements for each alarm are defined in the PCN(s). Specific requirements for HMI presentation can be found in the HMI standard.

The following table presents the minimum requirements for alarm annunciation and presentation:

PRIORITY	HMI PRESENTATION	EMAIL ON SHIFT	EMAIL OFF SHIFT
1	X	X	X
2	X	-	-
3	X	-	-
4	X	-	-

All alarms are represented on the HMI to draw attention to the problem.

1.5.5 Alarm/Event Color Schemes

The alarm and event color schemes used for all alarm and event summaries screens are provided in the High Performance HMI Standards.

1.5.6 Nuisance Alarm Suppression

1.5.6.1 Low Pass Filter

High-frequency fluctuations can be introduced into an analog input signal from either process noise or EMI noise. If these fluctuations occur close to an alarm trip point, they can cause repeated alarms as the signal bounces into and out of alarm.

It is necessary in many situations to introduce a low-pass filter to dampen the input signal and smooth out the response. Input filtering is programmed into the PAC software for the specific input.

1.5.6.2 Analog Alarm Hysteresis

Introducing hysteresis with the use of a deadband is an effective method for reducing repeating alarms due to process fluctuation or signal noise. With a programmed deadband on increasing process variables, such as for HI and HIHI alarms, the "ON" alarm trip point is higher than the "OFF" alarm trip point. With a programmed deadband on decreasing process variables, such as for LO and LOLO alarms, the "ON" alarm trip point is lower than the "OFF" alarm trip point. The deadband value should be selected to be greater than the typical signal fluctuation due to noise. The value of the deadband shall be operator-configurable from the HMI, with proper security clearance. A default deadband setting for each analog alarm is defined in the PCN.

1.5.6.3 Transient Suppression

Transients are introduced that can trigger false alarms when a process undergoes a step change event, for example, when the process is initiated, the setpoint is changed, or the state of a control device is changed (ON to OFF or OFF to ON). Depending on the process dampening, a transient may be a temporary overshoot of an expected result or it may be a delay in achieving the expected result. For example, a pump is turned on and it takes a few seconds to achieve the minimum flow and pressure.

To suppress transient-related alarms a time delay, during which associated alarms are not calculated, is shall be incorporated into many processes and device alarms to provide time for the process variable to stabilize as defined within the PCN. Transients shall not be configurable from the HMI.

1.5.6.4 Analog Debounce Timer

Signals that bounce as a result of a sudden change in a control variable (e.g., when a pump turns on or a valve opens) can cause repeating alarms as the signal

"bounces" around the Alarm ON and OFF trip points. Debounce timers exist within the PAC logic that requires the alarm to be OFF for a contiguous preset time before the alarm can be tripped ON. In many circumstances an alarm deadband eliminates the need for a debounce timer.

1.5.6.5 Digital Debounce Timer

Relays and limit switches are mechanical devices that will often bounce ON and OFF when they undergo a change of state. Creating a digital debounce timer within the PAC logic will ensure that the device must be stabilized ON or OFF for a contiguous present time before the state is determined.

1.5.6.6 Alarm Suppression

Alarms may be suppressed if certain conditions must be true for an alarm to be active. Eg. low flow alarm only if pump is running. Alarms suppression shall be programmed to prevent nuisance alarms when all conditions for an alarm are not met.

1.5.6.7 Alarms created during routine Maintenance

During maintenance of an analog device, erroneous alarms are commonly generated. To allow for the maintenance to proceed without the generation of alarms and upset to the process, the Operator must set appropriate flags. Alarms can be Enabled/Disabled via the PlantPAx faceplates.

1.5.6.8 Alarm Shelving

Alarm Shelving lets operators decide whether or not to put an alarm 'on the shelf' for a defined period of time or a certain occurrence. This temporarily removes it from the main alarm list to a special list, but the alarm itself is not affected. It will later require attention from the operator. In the meantime, the operator can concentrate on tasks judged to require their immediate focus. Simple navigation makes alarm shelving a valuable and much-appreciated tool that helps operators work with maximum efficiency. The default shelve time for all alarms should be set to 840 minutes.

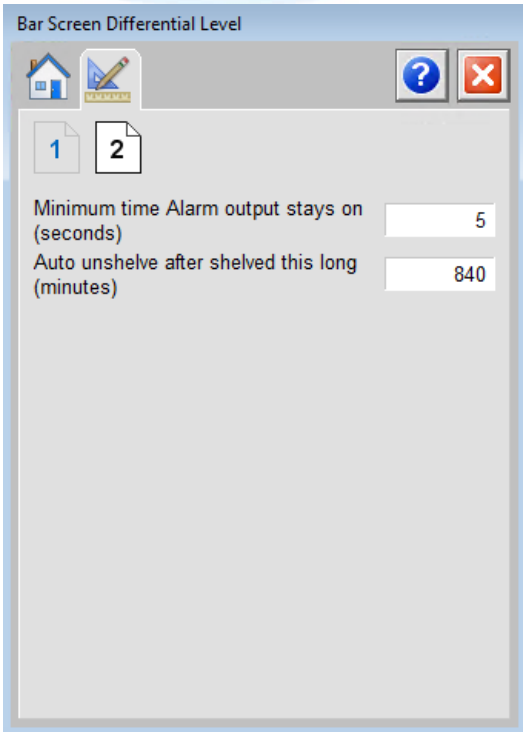

1.5.6.9 Instrument Failure Enable/Disable

The Instrument Failure Enable/Disable function disables visual and/or audio annunciation of threshold alarms (HI/HIHI/LO/LOLO) but retains the instrument ORL/ORH/OCT alarms. If a redundant device is available, the process will use the redundant device. If not, and the process is being controlled in AUTO, the process will continue to use the value from the instrument. A flag is set and historized for reporting when the Enable function is active.

1.5.6.10 Disabling Alarms

Incorporating many of the smart alarming strategies described above will minimize nuisance alarms. Despite best efforts, events still occur that trigger nuisance alarms. Operators are usually aware of the source and reason for these nuisance alarms. In this circumstance Operators have the ability to disable individual threshold (HIHI/HI/LO/LOLO) nuisance alarms. The field values continue to be used for process.

1.6 ALARM & EVENT TYPES

1.6.1 General

Alarms and events are determined during the development of PCNs. The type of alarm, the alarm priority, and alarm properties are defined and documented in consultation with the Agency. All events are recorded by the FT client and collected by the FT A&E database. During the configuration of the HMI database and screens as well as the development of the PAC program, all alarms and events shall be configured according to the PCN utilizing the PlantPAx base template process library.

For every PlantPAx object, all alarming capabilities shall be configured within A&E. For example, if only a High is specified in the PCN, all P_AIn alarms should still be configured within A&E (including HH, H, L, LL). This allow the operator in the future to add one of those alarms from the faceplate and have annunciation within A&E.

1.6.2 Signal Error Alarms

1.6.2.1 Input Failure alarm

Input failure alarm is generated when the process variable (PV) quality is bad, or when the PV is outside the configured limits (out of range high or out of range low), or when the range configuration is invalid..

1.6.3 Rate of Change Alarms

Rate of change alarms are generated when the analog signals rate of change is above the configurable rate of change setpoint.

1.6.3.1 Rate of Change High Alarm (RCH):

Set when the analog signal rate of change is above configurable allowed setpoint plus a deadband. The alarm is automatically reset in the PAC program when the analog signal is below the setpoint less the deadband.

1.6.3.2 Rate of Change Low Alarm (RCL):

Set when the analog signal rate of change is below the configurable allowed setpoint less a deadband. The alarm is automatically reset in the PAC program when the analog signal is above the setpoint less the deadband.

1.6.4 Threshold Alarms

There are four (4) standard Alarm Thresholds: HIHI, HI, LO, LOLO. Each threshold exceedance is determined within the PAC Analog Input Block.

Whether each of these 4 alarms is used at the HMI, or further employed in other calculated alarms, is a function of the process.

To reduce nuisance alarms, in many cases only a HIHI and/or LOLO alarm is used at the HMI. There is, for example, no need for a LO or LOLO alarm to be generated at the HMI for filter effluent turbidity, as low turbidity is the desired process condition. Whether or not each threshold is used, is defined in the PCN.

The following is a summary of the threshold alarms:

1.6.4.1 HIHI Alarm

Set when the analog value is above an HMI adjustable HIHI threshold (setpoint). The alarm is automatically reset in the PAC program when the analog signal is below the setpoint less the deadband.

1.6.4.2 HI Alarm

Set when the analog value is above an HMI adjustable HI threshold (setpoint) and below the HIHI threshold (If enabled). The alarm is automatically reset when the analog signal is below the setpoint less the deadband.

1.6.4.3 LO Alarm

Set when the analog value is below an HMI adjustable LO threshold (setpoint) and above the LOLO threshold (If enabled). The alarm is automatically reset when the analog signal is above setpoint plus the deadband.

1.6.4.4 LOLO Alarm

Set when the analog signal is below an HMI adjustable LOLO threshold (setpoint). The alarm is automatically reset when the analog signal is above the setpoint plus the deadband.

1.6.5 Discrete Alarms

Discrete alarms for devices are based directly on separate digital inputs from the device. Typically these alarms are dependent on the specific make/model of the

device. During the development of the PCN, and in consultation with the Agency, the standard approach may be modified and documented in the P&ID and the PCN. Typical discrete alarms would be General Alarm (GA) and Advisory Alarm (AA).

1.6.6 Virtual Alarms

Virtual alarms are alarms based off specific device conditions and are programmed into the PAC device blocks. They are considered virtual because they are generated by the PAC and not directly linked to an input. Listed below are standard virtual alarms available to certain devices.

1.6.6.1 Failed to Start Alarm

The PAC initiates a START command and the RUNNING status is not present following an elapse of a settable time delay. The alarm is latched in the PAC program until RESET from the device pop-up on the HMI.

1.6.6.2 Failed to Stop Alarm

The PAC initiates a STOP command and the RUNNING status is still present following an elapse of a settable time delay. The alarm is latched in the PAC program until RESET from the device pop-up on the HMI.

1.6.6.3 Valve Full Stall Alarm

A Valve full stall alarm is generated if the valve feedback indicates it did not move off the original position within a configured amount of time when commanded to the other position.

1.6.6.4 Valve Transit Stall Alarm

A Valve transit stall alarm is generated if the valve feedback indicates that the valve moved from the original position but did not reach the target position within a configured amount of time.

1.6.6.5 Valve Fault Alarm for Control Valves

A valve actuator fault alarm is generated when the difference between the requested position and the position feedback from the device is greater the configured deviation limit for an elapsed time delay. This alarm is self resetting when the difference between setpoint and feedback fall back under the deviation limit.

1.6.7 Smart Device - Alarms

Smart field equipment is capable of providing monitoring information through a communications network (e.g., Ethernet). Refer to the Instrumentation Standard 2.3 for details regarding the standard approach to the transmission of this information. During the development of the PCN, the Consultant shall determine, in consultation with the Agency, any information transfer required for integration into the HMI application for alarm conditions.

For each identified alarm condition, the HMI application is configured to directly read the memory map residing in the smart field equipment.

If required for use by a PAC, alarm conditions from the smart field equipment must be hardwired to a PAC I/O card or approved device.

1.6.8 Device Events

Alarms are captured in the A&E database. Factory Talk View SE HMI changes are recorded in the A&E SQL diagnostics database. Historical data is captured in the historical database (FT Historian SE). Listed below are events explicitly captured for devices used in process control.

1.6.8.1 Maintenance Mode and Operator Mode

Any change of state to maintenance mode or operator mode will be recorded in the A&E SQL diagnostics database. Additionally any Enable/Disable from the equipment faceplate will also be recorded in the A&E SQL diagnostics database.

1.6.8.2 Out of Service

Equipment service availability is monitored and recorded on change of state. Out of service is typically provided by a Lock-Out Stop button located in the field.

1.6.8.3 Hand/Auto or Local/Remote

Equipment mode switch position is monitored and recorded on change of state. Hand/Auto or Local/Remote is typically provided by a selector switch located at the field device. This is recorded as an alarm for when the equipment is not in auto or not in remote. This is captured in the A&E database.

1.6.8.4 Device Run

Equipment run status is monitored and recorded on change of state. Run status is typically provided by a digital contact from the field device. This is captured in FT Historian.

1.6.8.5 Open/Close

Equipment position status is monitored and recorded on change of state. Opened/Closed status is typically provided by limit switches in the field, but may be calculated in the PAC if no field switches exist. This is captured in FT Historian.

1.6.8.6 Speed/Position Status

Equipment speed/position feedback status is monitored and recorded on change of value. Speed/Position feedback is typically provided by a 4-20mA signal from the field device. This is captured in FT Historian.

1.6.8.7 Speed/Position Setpoint

Equipment speed/position setpoint status is monitored and recorded on change of value. Speed/Position setpoints are typically entered by the operator or are calculated by the PAC program. This is captured in FT Historian

1.6.9 PAC and Remote Racks

There are PAC and remote rack diagnostic screens available on the HMI for each treatment facility and for the remote stations. These screens show pictorially the active PAC alarms currently active.

1.6.9.1 PAC Run Status

An alarm is generated if the PAC is not in a running mode. A Controller checklist report display should be included in the HMI to monitor CPU usage and health of the PAC.

1.6.9.2 PAC Program Watchdog Fault

If the watchdog timer for a program exceeds the configured time setpoint, an alarm shall be generated.

1.6.9.3 PAC Fault

The major/minor fault status will be used to generate an alarm. Example: Battery failure, temperature, etc.

1.6.9.4 Communications Card Fault

If a communications card fault is active an alarm is generated.

1.6.9.5 I/O Communications Fault

If a failure occurs on the I/O network from PAC to the I/O racks (including DLR and PRP), an alarm shall be generated. In addition, DLR/PRP Diagnostic Faceplates shall be provided.

1.6.9.6 General I/O Fault

If an I/O card or I/O point is in a fault state an alarm is generated.

1.6.9.7 Redundancy Failover Fault

If the PAC fails over to the secondary processor, an alarm shall be generated.

1.6.9.8 Redundancy Available Status

If the secondary fail over processor is not available, an alarm shall be generated.

1.6.9.9 Power Supply Alarm

If the power supply for a PLC or I/O Rack fails, an alarm shall be generated.

1.6.10 Communication Alarms/Events

1.6.10.1 HMI Server to PAC Communication Alarm

All communication links between the PAC and HMI Servers are monitored in the HMI. The Server to PAC communications is monitored every few seconds, and an alarm is generated when the server does not receive a response from the PAC. The alarm remains active until communications recovers.

1.6.10.2 PAC-to-PAC Communication Alarm

These communication links are monitored in cases where data is exchanged between two PACs. If data is not received after a set time, a PAC-to-PAC communication alarm is generated and remains until communication is restored.

1.6.10.3 Ethernet/TCP Alarm

Ethernet communications is monitored by a centrally located network management application (Microsoft Operations Manager and CAT Tools). The network management application monitors and logs the communication status of network paths.

1.6.10.4 PAC to HMI Server Communication Fault

The communication link between each PAC and FT Server is monitored in the PAC. The Server to PAC communication is monitored once a minute, and an event is generated in the PAC after 5 failed communication attempts.

1.6.10.5 Non-Ethernet Communications

SCADA communication that is not on the SCADA Ethernet backbone will be monitored at the point of consolidation (typically a PAC as a Front-End Controller). Communication status (ACTIVE or FAILED) will be determined by the number of contiguous failed communication attempts (retries). For example, it may be decided that three (3) consecutive failed attempts to communicate will set the network path to FAILED. The criticality of the network node will determine if the communication failure is annunciated as an alarm or an event.

1.6.11 Server Alarms

The health of the SCADA Servers is monitored by the SCADA software. The SCADA software generates alarms as configured.

1.6.11.1 Primary Server Not Active Alarm

Every SCADA server is configured as a pair and work in a “Hot-Standby” configuration. Each pair of servers has a server that is assigned to be the Primary server and the other the Secondary server. It is desired to have the Primary server as the active server during normal operation. Upon the Secondary server becoming active an alarm is generated indicating the Primary server is no longer active.

1.6.11.2 Historian Collector Failed Alarm

Every SCADA server has historian collectors installed to collect realtime data. Upon failure of any of these collectors and alarm is generated at the HMI.

1.6.11.3 Remote Notification Software

Upon failure of the remote notification dial out system (Win911), an alarm shall be presented to the HMI and recorded in the A&E database.

1.7 EQUIPMENT ALARM HANDLING

1.7.1 Modes of Control

Refer to the Control and Monitoring Philosophy Standard 1.2 for a complete description of control modes. All standard controlled equipment such as pumps, blowers, etc. have three (3) possible modes of control as described below:

- Hand: The field-mounted, Local-Remote selector switch is set to LOCAL or H-O-A is in Hand. In this state, the associated equipment is controlled manually from the Local Control Panel only. Control from SCADA is not available.

- Operator Mode: The field-mounted, Local-Remote selector switch is set to REMOTE (or the H-O-A selector switch is in Auto) and the virtual HMI, OPERATOR mode is selected. In this state, the associated equipment is controlled manually from the HMI.

- Program Mode: The field-mounted, Local-Remote selector switch is set to REMOTE (or the H-O-A selector switch is in Auto) and the virtual HMI, PROGRAM mode is selected. In this state, the associated equipment is controlled automatically from the PAC.

In all of the above control modes, the SCADA system continually monitors and annunciates the alarm status of the associated equipment.

1.7.2 Health and Safety and Equipment Protection Alarms

Hardwired alarms related to health and safety or equipment protection are regardless of modes of control. In addition to the hard-wired control logic provided with these alarms, design must also incorporate a contact that shall be hardwired to the PAC and passed to the HMI for notification. The hardwired alarms will be tracked in the PAC to be annunciated at the HMI.

1.7.3 Device Interlock Alarms

Device Interlock Alarms are conditions which are not related to health and safety or equipment protection but are used for automated process control. An example of a device interlock could be a high- or low-level alarm from a level instrument.

Device interlocks are generated in software logic and are active in both PROGRAM Mmde and OPERATOR mode. In specific cases, the operator has the ability to bypass device (process) interlocks by operating equipment in OPERATOR mode.

1.7.4 Redundant Instruments and Alarming

Redundant instruments shall alarm when a high differential (greater than 5% of range) exists between two redundant instruments. PAC code selects the appropriate instrument for process control and is documented in the PCN.

Inland Empire Utilities Agency
A MUNICIPAL WATER DISTRICT

Section 4-Electrical and I&C-Appendices

iii SCADA Standards

APPENDIX C - HMI STYLE GUIDE

APPENDIX C - HMI STYLE GUIDE

APPENDIX C
HMI STYLE GUIDE

The style guide describes all aspects of display design. This guide is specific to the Rockwell Automation FactoryTalk View SE software. This guide includes text descriptions and documentation for all display objects.

Standardized display elements are created with the specific functionality described in this style guide. Management of change practices will be utilized to ensure these elements and associated documentation are updated as elements are modified or new versions developed.

Changes and additions to this style guide must be approved by the IEUA SCADA Manager prior to being incorporated into this standard.

A.1 COLOR USAGE

All Color usage should match PlantPAx standards. Color usage and application for foreground and background colors are defined for process graphics, alarm displays, and trends (Table 1).

Table 1: Process Graphic Colors

Object/Element	Color Name	Animation
Display Background and Navigation Buttons	Light Gray	
Static Text Display Title Selected Navigation Buttons	Dark Gray	
Static Text General Text Process Material	Gray	
Static Text Equipment Title	PlantPAx graphic standard colors	
Engineering Units	Black (PlantPAx graphic standard color)	
Dynamic Text Analog Values Discrete States	Black (PlantPAx graphic standard color)	
Setpoint Text Setpoint Values	Black	
Process Flow Lines	Black	

Object/Element	Color Name	Animation
Process Equipment (Outline) Vessels Tanks Heat exchangers Pump Valve	Black	
Active/Energized State (Fill) Valve Opened Pump Running Motor On	White (standard PlantPAx graphic color)	
Inactive/De-energized State (Fill) Valve Closed Pump Stopped Motor Off	Dark Gray (standard PlantPAx graphic color)	
Transition State (Fill) Valve Mid Travel Pump Starting/Stopping	Blue (standard PlantPAx graphic color)	
Equipment Fault State (Label/Border) Valve Fail Motor Fail	Based on Alarm Priority (standard PlantPAx graphic)	Based on Ack/Unack
Alarm Priority 1 – Urgent (Unack)	Magenta	Blink Medium
Alarm Priority 1 – Urgent (Ack)	Magenta	
Alarm Priority 2 – High (Unack)	Red	Blink Medium
Alarm Priority 2 – High (Ack)	Red	
Alarm Priority 3 – Medium (Unack)	Yellow	Blink Medium
Alarm Priority 3 – Medium (Ack)	Yellow	
Alarm Priority 4 – Low (Unack)	Blue	Blink Medium
Alarm Priority 4 – Low (Ack)	Blue	
Alarm – All Priorities (Return)	White	

Additional colors may be used based on the PlantPAx color palette assignments and IEUA specific updates.

Table 2: Alarm Window Colors

Object/Element	Color Name	Animation
Background Column Headings Row Selection Details Pane Toolbar	Light Gray	
Text Column Headings Row Selection Details Pane Toolbar	Dark Gray	
Grid Line	None	
Grid Background	White	
Alarm Priority 1 – Urgent (Unack)	Magenta Text White Background	Blink Medium
Alarm Priority 1 – Urgent (Ack)	Magenta Text White Background	
Alarm Priority 1 – Urgent (Return)	Green Text White Background	
Alarm Priority 2 – High (Unack)	Red Text White Background	Blink Medium
Alarm Priority 2 – High (Ack)	Red Text White Background	
Alarm Priority 2 – High (Return)	Green Text White Background	
Alarm Priority 3 – Medium (Unack)	Black Text White Background	Blink Medium
Alarm Priority 3 – Medium (Ack)	Black Text White Background	
Alarm Priority 3 – Medium (Return)	Green Text	

Object/Element	Color Name	Animation
	White Background	
Alarm Priority 4 – Low (Unack)	Black Text White Background	Blink Medium
Alarm Priority 4 – Low (Ack)	Black Text White Background	
Alarm Priority 4 – Low (Return)	Green Text White Background	

Table 3: Trend Window Colors

Object/Element	Color Name
Trend Background	Light Gray
Grid Lines	Gray
Text	Black
Pens Pen 1 All other Pens	 Dark Gray Any basic color not used for alarms

Table 4: Color Name Definition

Color Name	Color Definition		
	Red	Green	Blue
Blue	0	167	247
Dark Blue	0	0	255
Dark Gray	63	63	63
Dark Green	0	140	0
Gray	128	128	128
Light Gray	224	224	224
Magenta	255	0	255
Red	255	0	0

Color Name	Color Definition		
	Red	Green	Blue
White	255	255	255
Yellow	255	255	0
Black	0	0	0
Beige	212	208	200

A.2 TEXT

Text will be standardized for operator console use, or a typical viewing distance of 24 inches, from the screen. ANSI recommends text heights of a minimum 2.8mm, nominal of 3.5mm, maximum of 4.1mm. This roughly corresponds to TrueType point sizes of 8pt, 10pt, and 12pt respectively.

Table 5 includes a list of TrueType font and size for process graphic, alarm, and trend displays.

Table 5: Text Font and Size

Object/Element	Font	Size
Process Graphics		
Display Title	Arial, Bold	14
Equipment Titles	Arial	12
Instrumentation, Control Device Titles, Process Material	Arial	12
Off Page Connectors	Arial	12
Analog and Discrete values (PlantPAx object)	Arial	10
Engineering units (PlantPAx object)	Arial	10
Faceplates (PlantPAx Default)		
Title	Arial	10
Instrumentation and Control Device Titles	Arial	10
Analog and Discrete values	Arial	10
Engineering units	Arial	10
Alarm Displays		
Column Headings, Details, Toolbar, Status Bar	Arial, Bold	12
Alarm Text	Arial, Bold	12

Inland Empire Utilities Agency
A MUNICIPAL WATER DISTRICT

Section 4-Electrical and I&C-Appendices

iii SCADA Standards

APPENDIX D - SAMPLE DISPLAYS

APPENDIX D - SAMPLE DISPLAYS

APPENDIX D
SAMPLE DISPLAYS

G.1 LEVEL 1 DISPLAY

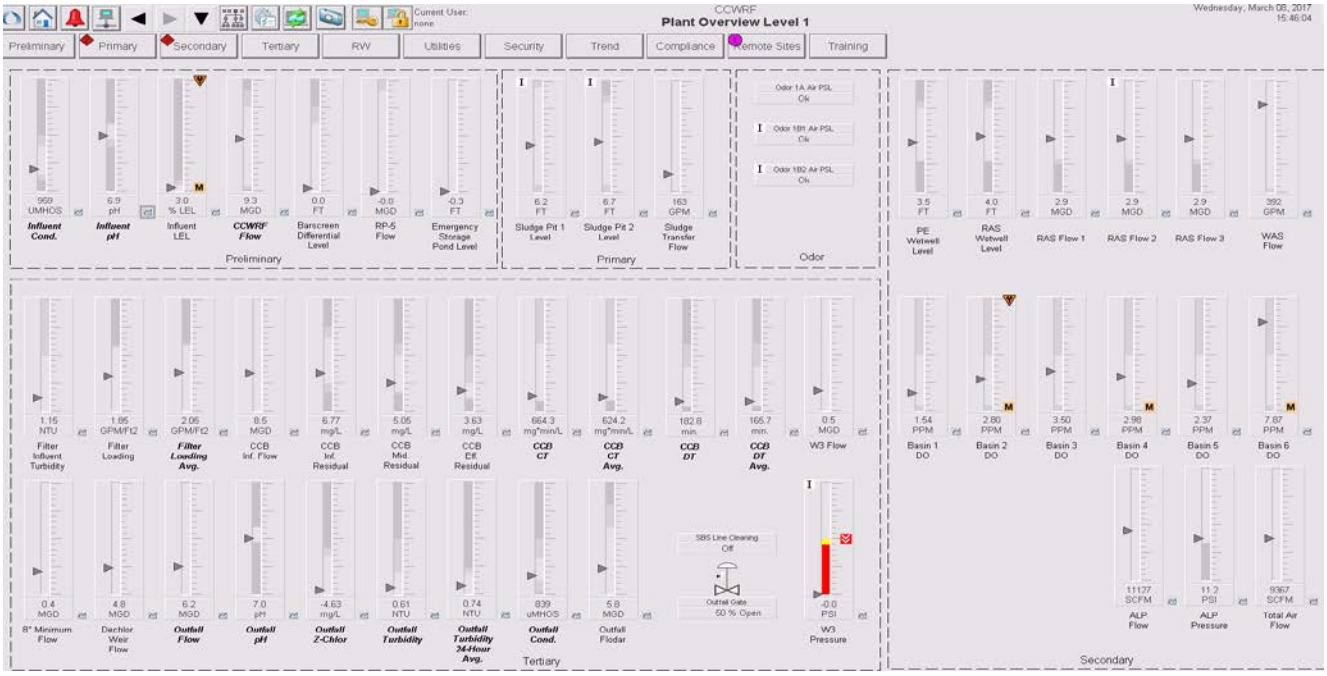

G.2 LEVEL 2 DISPLAY

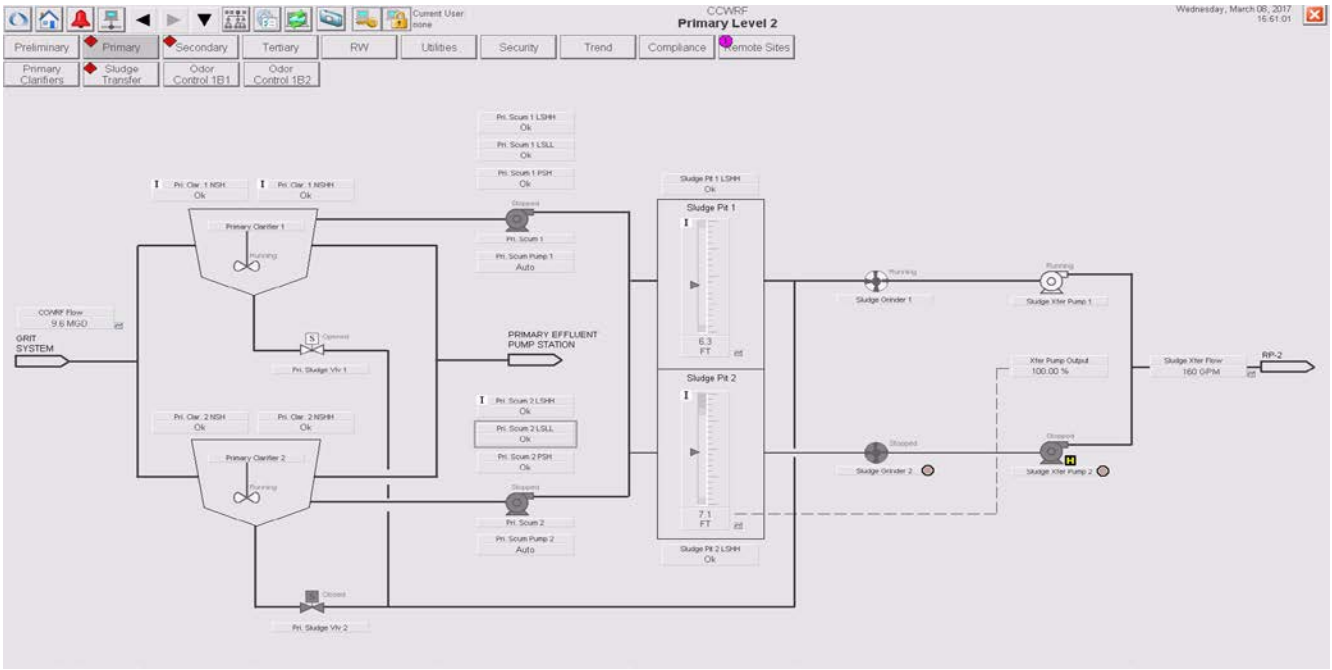

G.3 LEVEL 3 DISPLAY

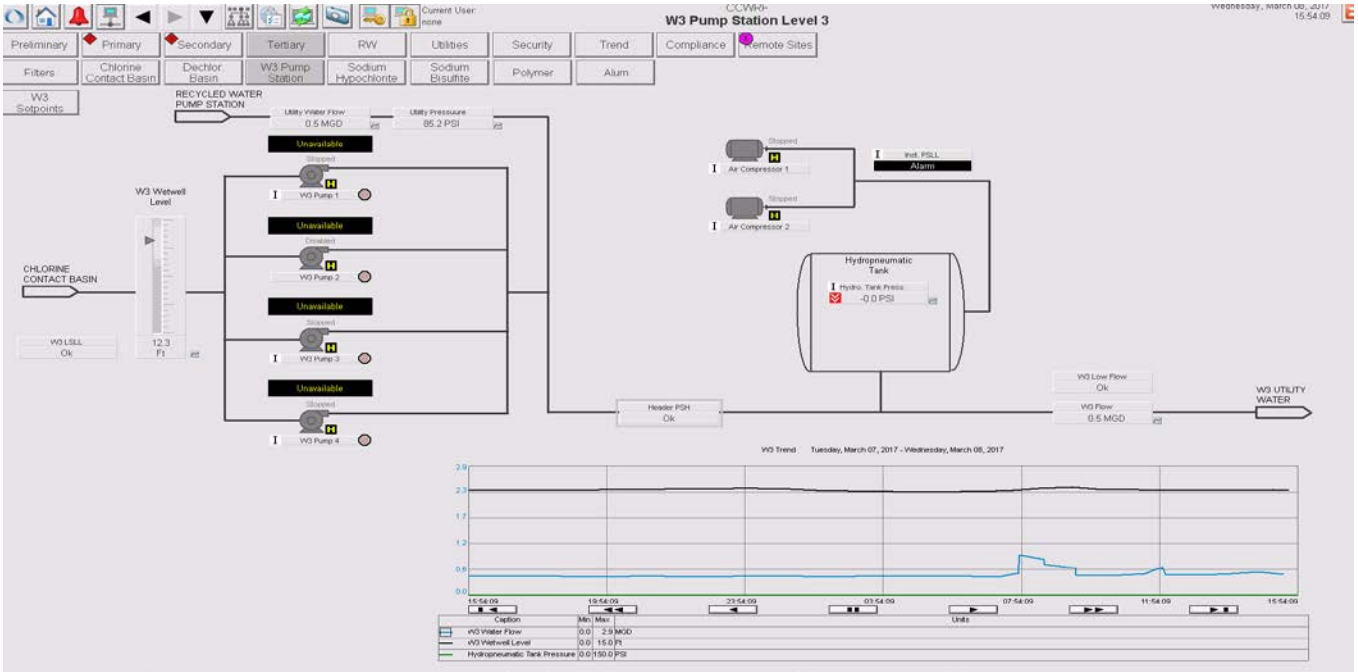

G.4 APPLICATION HEADER AND NAVIGATION BAR

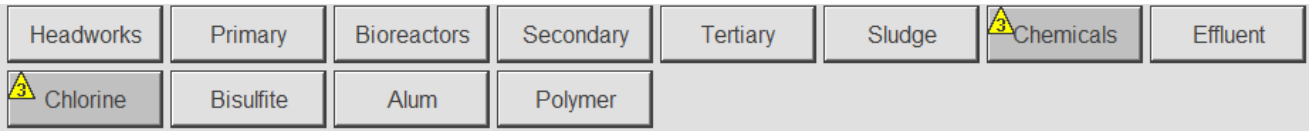

G.5 ALARM SUMMARY

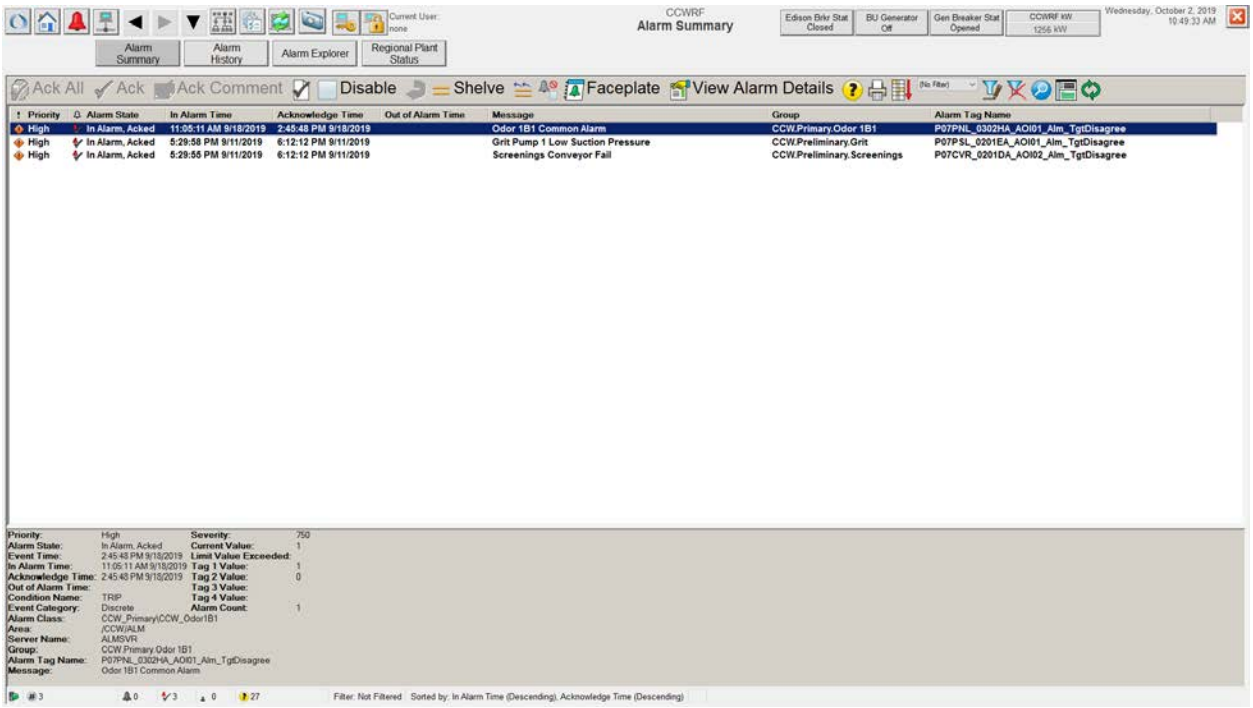

Inland Empire Utilities Agency
A MUNICIPAL WATER DISTRICT

Section 4-Electrical and I&C-Appendices

iii SCADA Standards

APPENDIX E - HMI GROUPS AND SECURITY CODES

APPENDIX E - HMI GROUPS AND SECURITY CODES

APPENDIX E
HMI GROUPS AND SECURITY CODES

FTView A_P Security Code Configuration	Normal Operation of Devices	Manual Device Operation (non-coordinated)	Equipment Maintenance	Configuration & Tuning Maintenance	Engineering Configuration	Acknowledge and Shelve Alarms	Supervisory Operations	Disable Alarms Bypass Permissives and Interlocks	spare	Normal Production (Batches & Lots)	Setpoint and Parameter Override	Override/Force Sequences	Process Exception Handling, Advanced	Navigate Across Units/Applications	Shutdown Application, Operating System	Admin: Security, Users, Passwords
	A	**B**	**C**	**D**	**E**	**F**	**G**	**H**	**I**	**J**	**K**	**L**	**M**	**N**	**O**	**P**
Command Equipment in Operator Mode	X															
Enter Setpoints, Control Variables	X															
Reset Latched Interlocks, Restart Equipment	X															
Add Batch to Batch List, Run Batches										X						
Hold, Restart Batches, clear failures, bind, bind ack										X						
Acquire/Lock and Release Equipment Operator Mode		X														
Change Loop Mode (Manual, Auto, Cascade)	X															
Acquire/Release Equipment Maintenance Mode			X													
Reset Run Time Accumulators			X													
Override Inputs			X													
Bypass Feedback			X													
Enable/Disable Device			X													
Configuration (Limits, Constants, Timers)				X												
Modify Alarm Delay Times				X												
Tuning				X												
Change Machine Configuration					X											
Setup Configuration (Advanced)					X											
Alarm Configuration (Ack Required, Reset Required)					X											
Put Device in Simulation					X											
Edit HMI Application					X											
Acknowledge Alarms						X										
Reset Alarms						X										
Shelve Alarms						X										
Disable Alarms								X								
Modify Alarm Limits and Deadbands								X								
Bypass Permissives and Interlocks								X								
Respond to Prompt (level 1)										X						
Respond to Prompt (level2)													X			
Exception Processing (Resume, Manual, Auto, Semi-Auto, Pause, Disconnect, Release)													X			
Exception Processing (Step Change, Parameter Change, Step, Acquire, Reorder, Reactivate Step)												X				
Override Downloaded Setpoints											X					
Override Downloaded Phase Parameters											X					
Manual Batch Processing (Stop, Abort, Reset Phases)													X			
Manual Supervisory EP/EM Control							X									
Force Steps/States												X				
Change Inflights and Preacts				X												
Force Queue Indexing													X			
Navigate to Other Units														X		
Shutdown HMI Application															X	
Access Windows Start Menu, Windows Apps															X	
Change Accounts/Passwords																X
Change Security Settings																X
Process																
HMI Operators	X					X				X			X	X		
HMI Operating Supervisor	X	X	X	X		X	X	X		X	X	X	X	X		
HMI Maintenance	X	X	X			X	X	X		X	X	X	X	X	X	
HMI Maintenance Supervisor	X	X	X	X		X	X	X		X	X	X	X	X	X	
HMI Manager	X	X	X	X		X	X	X		X	X	X	X	X	X	
HMI Engineering	X	X	X	X	X	X	X	X		X	X	X	X	X	X	
HMI Admin														X	X	X

Inland Empire Utilities Agency
A MUNICIPAL WATER DISTRICT

Section 4-Electrical and I&C-Appendices

iii SCADA Standards

APPENDIX F - IO LOOP TEST FORM

APPENDIX F - IO LOOP TEST FORM

APPENDIX F
IO LOOP TEST FORM

Project Name:		**General Contractor:**	
Project Number:		**Electrical Contractor:**	
I/O Check Date:		**Panel Name:**	

Attendees	Print Name	Signature
(Sub) Contractor:		
IEUA Representative:		
IEUA Representative:		
Consultant Representative:		
Integrator/Programmer:		
Other:		

Test Preparation

Requirements prior to proceeding with the I/O Check:

- Contractor has completed 90%+ of all I/O wiring to the PAC for the initial I/O Check. Contractor to clearly identify the scope of the uncompleted I/O so IEUA and the integrator can evaluate if the test should proceed.
- Contractor **MUST** have completed his own validation of the I/O to be tested prior to the I/O Check date.
- Contractor must have necessary tools on hand to complete voltage and current validations and materials available on site to complete wiring corrections.
- Contractor to have scheduled staff (or subcontractor installing work) to be dedicated to the task of carrying out the I/O Check Test (do not combine the I/O Check Test with other works, training, or other testing).
- For devices located in confined spaces the Contractor is to have required confined space training, entry and fall arrest equipment, and forms on hand to perform the I/O checks for devices/equipment located within the confined space. Neither IEUA Staff nor the integrator will provide confined space materials, rescue team, or enter the confined space.
- Field side control wire tagging is completed for attached I/O and conforms to SCADA Standards (Tagging and Coding).
- Required notice (minimum 1 week) of test must be provided to integrator and IEUA.

Item	Test Preparation Documents	Contractor Initials	Integrator Initials
1	As-Constructed Panel Drawings for Mark-ups		
2	Contractor's Internal I/O Test Document Sheets		
3	Copy of Reviewed Shop Drawings (with Consultant		
4	Contractor has confined space equipment/plan for triggering devices located in confined spaces.		
5	Test Program installed – PAC configured (auto logic disabled)		
6	Instrumentation Calibration Sheets available		
7	Area is safe to conduct tests		
8	Other:		

Inland Empire Utilities Agency
A MUNICIPAL WATER DISTRICT

ON-Site Panel Inspection Check List

Enclosure	Enclosure manufacturer matches shop submission			
	Panel free from defects (scratches/dents/holes)			
	No blanked holes (indication of error in cutting)			
	No unnecessary holes present			
	Panel is free from metal shavings and debris (cleaned)			
Wiring & Power Supplies	Internal Panel wiring is #16AWG, 16 strand			
	DC control wiring is dark blue, #16AWG, 16 strand			
	AC control wiring is red, #16AWG, 16 strand			
	Interlock wiring is yellow, #16AWG, 16 strand			
	Analog wiring is shield twisted pair, #18AWG			
	120VAC (power) wiring is black, #14 AWG			
	120VAC (neutral) wiring is white, #14 AWG			
	Grounding wire is green, #14 AWG			
	DC Ground wiring is green with yellow stripe, #14 AWG			
	Tug test on 10% of wires – confirm secure to Terminals			
	Wires neatly organized in raceway (Panduit) – no more than 50% filled, raceways white in colour			
	Wire tagging conforms to SCADA standards (Style & Font)			
	Wire tags are visible without manipulation of wire			
	All wires are labelled – (Check of text in following section)			
	Wires are bundled with Velcro style wraps not ty-wraps			
	Wires to panel door bundled in spiral wrap not ty-wraps			
	No splices or marrettes are utilized			
	No wiring passes over top TBs or under DIN rail			

Inland Empire Utilities Agency
A MUNICIPAL WATER DISTRICT

I/O Check

Verify the following components conform to the specified function and match reviewed shop drawings.

The columns in the following checklist table are defined briefly below.

Field Wire Tag: Field side wire tag – must conform to Tagging and Coding SCADA Standards. This is the wire tag at the field side of the terminal blocks within the control panel.

Wire Tag OK: Check this box if field side wire tag confirms to Tagging and Coding SCADA Standards.

Wire Colour OK: Check this box if field side wire colour conforms to SCADA Drawing Standard Standards.

I/O Point Jumpered Only: Check this box if I/O point was jumpered at an MCC or terminal block – usually checked off if field device is not present or cannot be powered. **These points need to be checked again once field conditions are revised to allow checking at end device**.

I/O Point Confirmed at Field Device:Check this box if I/O point was tested by actual operation of the end device.

Inland Empire Utilities Agency
A MUNICIPAL WATER DISTRICT

SAMPLE ONLY – MODIFY FOR SPECIFIC SITE/PANEL

= Areas to be prepared prior to test.

PAC TYPE	Description	Field Wire Tag	I/O Point	Wire Tag OK	Wire Colour OK	I/O Point Jumper Only	I/O Point Confirmed at Field Device
				☐	☐	☐	☐
				☐	☐	☐	☐
				☐	☐	☐	☐
				☐	☐	☐	☐
				☐	☐	☐	☐
				☐	☐	☐	☐
				☐	☐	☐	☐
				☐	☐	☐	☐
				☐	☐	☐	☐
				☐	☐	☐	☐
				☐	☐	☐	☐
				☐	☐	☐	☐
				☐	☐	☐	☐
				☐	☐	☐	☐
				☐	☐	☐	☐
				☐	☐	☐	☐
				☐	☐	☐	☐
				☐	☐	☐	☐
				☐	☐	☐	☐
				☐	☐	☐	☐
				☐	☐	☐	☐
				☐	☐	☐	☐
				☐	☐	☐	☐
				☐	☐	☐	☐
				☐	☐	☐	☐
				☐	☐	☐	☐
				☐	☐	☐	☐

Inland Empire Utilities Agency
A MUNICIPAL WATER DISTRICT

Instrumentation Calibration Sheets

Contractor is to have completed instrumentation calibrations and have calibration sheets on hand for the I/O Check-Out. Summarize the calibrations below:

Instrument Name	Instrument Type	Make/Model	Span

Inland Empire Utilities Agency
A MUNICIPAL WATER DISTRICT

POST-Test Review

- *Discussion of Deficiencies and concerns (if necessary).*
- *Schedule date to complete I/O Checks for any missing or deficient I/O points.*
- *Review proposed SAT date(s).*
- *New Business.*

Item	Deficiency Description	Initials	Initials
1			
2			
3			
4			
5			
6			
7			
8			
9			
10			
11			
12			
13			
14			
15			
16			
17			
18			
19			
20			
21			
22			

23			
24			
25			
26			
27			
28			
29			
30			
31			
32			
33			
34			
35			
36			
37			
38			

Signatures: _____ _____

Contractor (Date) Consultant/Integrator (Date)

Notes:

Inland Empire Utilities Agency
A MUNICIPAL WATER DISTRICT

Section 4-Electrical and I&C-Appendices

iii SCADA Standards

APPENDIX G- DEVICE TEST FORM

APPENDIX G- DEVICE TEST FORM

Inland Empire Utilities Agency
A MUNICIPAL WATER DISTRICT

APPENDIX G
DEVICE TEST FORM

Inland Empire Utilities Agency
A MUNICIPAL WATER DISTRICT

Project Name:		**Panel Manufacturer:**	
Project Number:		**Panel Job No:**	
Panel FAT Date:		**Panel Tagname:**	

Attendees	Print Name	Signature
Panel Manufacturer Rep/ Tester:		
IEUA Representative:		
Consultant Representative:		
Integrator/Programmer:		
Other:		
Other:		

1.0 Test Preparation

Item	Test Preparation Documents	Manufacturer Initials	Consultant Initials
1	As-Constructed Panel Drawings for Mark-ups		
2	Manufacturer's Internal Test Document Sheets		
3	O&M Materials on hand – Panel Components		
4	Copy of Reviewed Shop Drawings (with Consultant Stamp)		
5	Test Program installed – PAC configured		
6	Area is safe to conduct tests		
7	Other:		

Inland Empire Utilities Agency
A MUNICIPAL WATER DISTRICT

2.0 Panel Inspection Check List

Item	Test/Inspection Parameter	Mfr. Initials	Consultant Initials	Comment
Enclosure	Enclosure manufacturer matches shop submission			
	Panel free from defects (scratches/dents/holes)			
	No blanked/unnecessary holes (error in cutting)			
	CAT6A Ethernet patch cables installed			
	No sharp edges that could cut or snag			
	Panel colour conforms to Spec			
	Enclosure NEMA Rating matches shop drawings			
	Door Closure Matches Shops (3-point vs. clasps)			
	3-point handle is lockable, keys present			
	Door Hinge is piano style			
	Door able to close correctly with expected effort			
	Door swing proper direction (where orientation matters)			
	Fans and Vents installed if specified			
	Outdoor Panel has inner door for controls			
	Padlock Hasp present			
	Laptop tray installed as per shop drawings			
	Print Pocket installed			
	Panel Labelling Conforms to SCADA Standards and has an ID tag (site code + panel number)			
	Panel is free from metal shavings and debris (cleaned)			
PAC	PAC Processor (CPU) match shop drawings			
	Rack Layout matches shop drawings			
	Digital Input (DI) Cards match shop drawings			
	Digital Output (DO) Cards match shop drawings			
	Analog Input (AI) Cards match shop drawings			
	Analog Output (AO) Cards match shop drawings			
	Slot fillers present where required			
	Communication Cards installed as per design/shops			
	Rack to Rack Communication/crossover Cable(s) installed (CAT6)			

Inland Empire Utilities Agency
A MUNICIPAL WATER DISTRICT

Item	Test/Inspection Parameter	Mfr. Initials	Consultant Initials	Comment
	CPU shows no faults			
	I/O Card safety doors can be closed			
	I/O Cards labelled with slot assignment (on card door)			
Co ntr	Pilot lights are Push-to-Test, LED, & are functional			
	Pilot lights are 800T style unless otherwise specified			
	Pilot Light lens colours matches SCADA standards & drawings			
	Lights are properly labelled with lamacoids as per shops, check spelling			
	Hand switches conform to Standards and shops			
	Hand switches labelled with lamacoid, check spelling			
	Motor Control – L/R switches are Make-Before-Break			
	Security Key switch is present (if specified)			
	Alarm Horn installed (if specified)			
	Controls Layout matches shop drawings			
	Push buttons are 800T style			
	Push button colour conform to SCADA Standards			
	OIT make and model match shop submission			
	OIT operational, screen lit and display text in English			
	Panel Meters match make and model of shop submission			
	Confirm OIT and Panel Meter installation plumb and square. OIT centre to be mounted 5.5' from base of panel			
	OIT is loaded with program (where required)			
Wiring & Power Supplies	Internal Panel wiring is #16AWG, 16 strand			
	DC control wiring is dark blue, #16AWG, 16 strand			
	AC control wiring is red, #16AWG, 16 strand			
	Interlock wiring is yellow, #16AWG, 16 strand			
	Analog wiring is shield twisted pair, #18AWG			
	120VAC (power) wiring is black, #14 AWG			
	120VAC (neutral) wiring is white, #14 AWG			
	Grounding wire is green, #14 AWG			
	DC Ground wiring is green with yellow stripe, #14 AWG			
	Grounding bar is copper and panel grounds secured to grounding bar			

Inland Empire Utilities Agency
A MUNICIPAL WATER DISTRICT

Item	Test/Inspection Parameter	Mfr. Initials	Consultant Initials	Comment
	Grounding bar connections not overburdened			
	Panel doors grounded by grounding wire or strap			
	Grounding lugs are secure – solid connection at crimps			
	Tug test on 10% of wires – confirm secure to Terminals			
	Jumper bars – confirm secure to all terminals			
	Wires neatly organized in raceway (Panduit) – no more than 50% filled, raceways white in colour			
	Circuit breakers used to power I/O Cards			
	Fused Terminal Blocks (with LED indication) used for 120VAC instrumentation power supply unless using CBs			
	Circuit breakers used for 24VDC devices			
	Knife disconnect terminal blocks used for analog connections			
	Electrical grounding terminal blocks are Green/Yellow, non-fused			
	Instrument grounding terminal blocks (for analog wire shield termination) are grounded to the isolated ground bar, and not the electrical ground or the panel.			
	All I/O available at I/O cards are terminated on terminal blocks (ensures spares are prewired to terminal blocks)			
	Wire tagging conforms to SCADA standards (Style & Font)			
	Wire tags are visible without manipulation of wire			
	All wires are labelled – (Check of text in following section)			
	Terminal blocks are labelled on both sides and match shop drawing designations			
	Wires are bundled with Velcro style wraps not ty-wraps			
	Wires to panel door bundled in spiral wrap not ty-wraps			
	No splices or marrettes are utilized in the panel			
	No wiring passes over top of TBs or under DIN rail			
	5cm of space exists at any wire connection point and duct			
	All Fuses and CBs are labelled and shown on drawings			
	All power supplies, power filters, surge TVSS labelled			
	All control relays and panel devices are labelled			
	UPS Feed receptacle is simplex and brown in colour			

Inland Empire Utilities Agency
A MUNICIPAL WATER DISTRICT

Item	Test/Inspection Parameter	Mfr. Initials	Consultant Initials	Comment
	Utility receptacle is duplex and white or ivory in colour, and labelled 'UTILITY – 5A MAX'			
	UPS make and model matches shop drawings – contains Ethernet module			
	UPS bypass make and model matches shop drawings			
	Power Filter make and model matches shop drawings			
	Combination 120VAC/RJ45 receptacle matches shops			
	24VDC power supply matches shop drawings/Standards			
Voltages	Voltage at main CB is 115-120VAC			
	Voltage after Power filter/TVSS is 115-120VAC			
	Voltage at receptacles is 115-120VAC – trip breaker & check for no voltage			
	10% Misc check at voltages on 120V supply			
	Check 24VDC output from 24VDC power supplies			
	10% Misc check at voltages on 24VDC supply circuits			
	Voltage between neutral and ground – should be 0 VAC			
	Open main breaker – confirm UPS maintains loads & annunciates power fail beep + shows 'on battery' 15 min			
	Test UPS maintenance bypass – confirm power remains to panel			
	Test CRUPS relay bypass – confirm power remains to panel			
	De-energize one of the two redundant 24VDC power supplies –confirm 24VDC remains. Repeat on other unit			
OTHER				

3.0 Loop and Tag Check

Verify the following components conform to the specified function and match reviewed shop drawings.

The columns in the following checklist table are defined briefly below.

Wire Tag: Wire tag matches reviewed shop drawing submittals and conforms to SCADA standards.

PAC LED: The correct PAC LED is lit when input/output point is tripped.

4-20mA: Analog input/output signals generated by PAC and/or 4-20mA generator match expected values.

Drawing: I/O Points and panel layout match provided As-Built Drawings.

Inland Empire Utilities Agency
A MUNICIPAL WATER DISTRICT

SAMPLE ONLY – MODIFY FOR SPECIFIC PANEL

PAC TYPE	Description	Tag Name	Full Slot Address	Wire Tag	PAC LED	4-20 mA	Dwg.
				☐	☐	☐	☐
				☐	☐	☐	☐
				☐	☐	☐	☐
				☐	☐	☐	☐
				☐	☐	☐	☐
				☐	☐	☐	☐
				☐	☐	☐	☐
				☐	☐	☐	☐
				☐	☐	☐	☐
				☐	☐	☐	☐
				☐	☐	☐	☐
				☐	☐	☐	☐
				☐	☐	☐	☐
				☐	☐	☐	☐
				☐	☐	☐	☐
				☐	☐	☐	☐
				☐	☐	☐	☐
				☐	☐	☐	☐
				☐	☐	☐	☐
				☐	☐	☐	☐
				☐	☐	☐	☐
				☐	☐	☐	☐
				☐	☐	☐	☐
				☐	☐	☐	☐
				☐	☐	☐	☐
				☐	☐	☐	☐
				☐	☐	☐	☐
				☐	☐	☐	☐
				☐	☐	☐	☐
				☐	☐	☐	☐
				☐	☐	☐	☐
				☐	☐	☐	☐
				☐	☐	☐	☐
				☐	☐	☐	☐
				☐	☐	☐	☐
				☐	☐	☐	☐
				☐	☐	☐	☐
				☐	☐	☐	☐
				☐	☐	☐	☐

Inland Empire Utilities Agency
A MUNICIPAL WATER DISTRICT

4.0 POST-Test Review

- *Discussion of Deficiencies and concerns (if necessary).*
- *Review proposed panel installation date(s).*
- *Review proposed Field I/O Check date(s).*
- *New Business.*

Item	Deficiency Description	Initials	Initials
1			
2			
3			
4			
5			
6			
7			
8			
9			
10			
11			
12			
13			
14			
15			
16			
17			
18			
19			

20			
21			
22			
23			
24			
25			
26			
27			
28			
29			
30			
31			
32			
33			
34			
35			
36			
37			
38			

Signatures: _____ _____

Panel Manufacturer (Date) Consultant/Integrator (Date)

Notes:

Inland Empire Utilities Agency
A MUNICIPAL WATER DISTRICT

Section 4-Electrical and I&C-Appendices

iii SCADA Standards

APPENDIX H- LOGIC TEST FORM

APPENDIX H- LOGIC TEST FORM

Inland Empire Utilities Agency
A MUNICIPAL WATER DISTRICT

APPENDIX H
LOGIC TEST FORM

Inland Empire Utilities Agency
A MUNICIPAL WATER DISTRICT

Project Name:		**System Integrator:**	
Project Number:		**Integrator Project No:**	
FAT Date:		**PAC(s) Name:**	

Attendees	Print Name	Signature
Integrator/Programmer:		
Integrator/Programmer:		
IEUA Representative:		
IEUA Representative:		
IEUA Representative:		
Consultant Representative:		
Consultant Representative:		
Other:		
Other:		

1.0 FAT Test Preparation

Item	Test Preparation	Integrator Initials	Rep Initials
1	As-Constructed Panel Drawings (11x17) – Copies for		
2	Latest Process Control Narrative – Copies for all		
3	Latest P&ID Drawings (11x17) – Copies for all		
4	Contract Document Set for reference (1 copy)		
5	Diagram/Schematic of Test Apparatus – Copies for all		
6	Test apparatus operating without error(s)		
7	Test Program installed – PAC configured, no CPU		
8	Display monitor/screen adequate to demonstrate		

2.0 Test Methodology

The procedures contained in this section are the recommended test procedures to ensure a comprehensive validation of the PAC logic, in conjunction with the HMI and/or OIT, can be achieved.

2.1 Constant Speed Pump/Motor Test Procedure

The following outlines the general test procedure to test a discrete motor/device such as a constant speed pump. Record results in the Constant Speed Pump/Motor summary table.

- **Local/Remote Selection** (Simulation Enabled)
  - *Toggle/force Control Mode field input (Control Mode Status).*
  - Confirm that pump goes from LOCAL to SCADA-MANUAL/SCADA-AUTO mode within the PAC logic.
  - Confirm that HMI graphic changes to match field input at the following locations:
    - Pump Pop-Up
    - Process Screen (Text Below Pump/Motor)
    - Event Page
    - OIT(if applicable)
- **SCADA-MANUAL/SCADA-AUTO selection** (Simulation Enabled)
  - Toggle SCADA-MANUAL/SCADA-AUTO selection through HMI.
  - Confirm that pump goes from SCADA-MANUAL to SCADA-AUTO mode within the PAC logic.
  - Confirm that the HMI graphic changes to match field input at the following locations:
    - Pump Pop-Up
    - Process Screen (Text Below Pump/Motor)
    - Event Page
    - OIT(if applicable)
- **Field Point – Running Status** (Simulation Enabled)
  - *Toggle/force Running Status field input ON.*
  - Confirm that the HMI graphic changes to match running condition at the following locations:
    - Pump Pop-Up
    - Process Screen (Text Below Pump & Pump Symbol)
    - Event Page
    - OIT(if applicable)
  - *Toggle/force Running Status field input OFF.*
- **Field Point – Hardwired Alarms** (Simulation Enabled)
  - *Toggle/force hardwired alarm field input.*

- Confirm that the HMI graphic changes to match hardwired alarm condition at the following locations:
  - Pump Pop-Up
  - Process Screen (Pump Symbol)
  - Alarm Page
  - Alarm Banner
  - OIT(if applicable)
- **SCADA-MANUAL Operation** (Simulation Enabled)
  - Start pump from HMI Pump Pop-Up.
    - Confirm Start Pump DO point turns ON at the PAC card.
    - Confirm that start request timer is timing in the PAC logic.
    - Confirm pump symbol changes colour to Red (Running).
  - Stop pump from HMI Pump Pop-Up.
    - Confirm Stop DO point turns ON at the PAC card.
    - Confirm that stop request timer is timing in the PAC logic.
    - Confirm pump symbol changes colour to Green (Stopped).

- **Virtual Alarms** (Simulation Disabled)
  - Issue a start command from HMI Pump Pop-Up.
    - Confirm that 'Fail to Start' alarm is received at HMI and OIT (if applicable).
  - ACK alarm – confirm that alarm resets.
  - *Toggle/force Running Status field input ON.*
    - Confirm that 'Uncommanded Start' alarm is received at HMI and OIT (if applicable).
  - ACK alarm – confirm that alarm resets.
  - Issue a stop command from HMI Pump Pop-Up.
    - Confirm that 'Fail to Stop' alarm is received at HMI and OIT (if applicable).
  - ACK alarm – confirm that alarm resets.
  - *Toggle/force Running Status field input OFF.*
    - Confirm that 'Uncommanded Stop' alarm is received at HMI and OIT (if applicable).
  - ACK alarm – confirm that alarm resets.

- **Runtimes** (Simulation Enabled)
  - Confirm that PAC contains Runtime value shown in HMI Control Pop-up.
  - *Reset Runtime at Control Pop-up (sets runtime to zero).*
    - Confirm that PAC contains a Runtime value of zero.

2.2 VFD Pumps Test Procedure

- **Local/Remote Selection** (Simulation Enabled)
  - *Toggle/force Control Mode field input (Control Mode Status).*

- Confirm that pump goes from LOCAL to SCADA-MANUAL/SCADA-AUTO mode within the PAC logic.
- Confirm that HMI graphic changes to match field input at the following locations:
  - Pump Pop-Up
  - Process Screen (Text Below Pump)
  - Event Page
  - OIT (if applicable)

- **SCADA-MANUAL/SCADA-AUTO selection** (Simulation Enabled)
  - Toggle SCADA-MANUAL/SCADA-AUTO selection through HMI.
  - Confirm that pump goes from SCADA-MANUAL to SCADA-AUTO mode within the PAC logic.
  - Confirm that the HMI graphic changes to match field input at the following locations:
    - Pump Pop-Up
    - Process Screen (Text Below Pump)
    - Event Page
    - OIT (if applicable)

- **Field Point – Running Status** (Simulation Enabled)
  - *Toggle/force Running Status field input ON.*
  - Confirm that the HMI graphic changes to match running condition at the following locations:
    - Pump Pop-Up
    - Process Screen (Text Below Pump & Pump Symbol)
    - Event Page
    - OIT (if applicable).
  - *Toggle/force Running Status field input OFF.*

- **Field Point – Hardwired Alarms** (Simulation Enabled)
  - *Toggle/force hardwired alarm field input.*
  - Confirm that the HMI graphic changes to match the Hardwired Alarm condition at the following locations:
    - Pump Pop-Up
    - Process Screen (Pump Symbol)
    - Alarm Page
    - Alarm Banner
    - OIT (if applicable)

- **SCADA-MANUAL Operation** (Simulation Enabled)
  - Start pump from HMI Pump Pop-Up & Set Speed Setpoint to 65%.
    - Confirm Start Pump DO point turns ON at the PAC card.
    - Confirm that Start Request Timer is timing in the PAC logic.

        - Confirm pump symbol changes colour to Red (Running).
    - *Enter 50% speed into VFD Speed Feedback block within PAC logic.*
        - Confirm speed indication at HMI process screen and pump pop-up.
        - Confirm VFD Speed Deviation Alarm appears when VFD Speed Setpoint and VFD Speed Feedback difference exceeds Deviation Alarm % Setpoint (Default 5%).
    - Stop pump from HMI Pump Pop-Up.
        - Confirm Stop DO point turns ON at the PAC card.
        - Confirm that stop request timer is timing in the PAC logic.
        - Confirm pump symbol changes colour to Green (Stopped).
    - *Set VFD Speed Setpoint to match VFD Speed Feedback.*
        - Confirm Speed Deviation Alarm disappears.

- **Virtual Alarms** (Simulation Disabled)
    - Issue a start command from HMI Pump Pop-Up.
        - Confirm that 'Fail to Start' alarm is received at HMI and OIT (if applicable).
    - ACK alarm – confirm that alarm resets.
    - *Toggle/force Running Status field input ON.*
        - Confirm that 'Uncommanded Start' alarm is received at HMI and OIT (if applicable).
    - ACK alarm – confirm that alarm resets.
    - Issue a stop command from HMI Pump Pop-Up.
        - Confirm that 'Fail to Stop' alarm is received at HMI and OIT (if applicable).
    - ACK alarm – confirm that alarm resets.
    - *Force Running Status field input OFF.*
        - Confirm that 'Uncommanded Stop' alarm is received at HMI and OIT (if applicable).
    - ACK alarm – confirm that alarm resets.

- **Runtimes** (Simulation Enabled)
    - Confirm that PAC contains Runtime value shown in HMI Control Pop-up.
    - *Reset Runtime at Control Pop-up (sets runtime to zero).*
    - Confirm that PAC contains a Runtime value of zero.

2.3 Discrete Valve Test Procedure

- **Local/Remote Selection** (Simulation Enabled)
    - *Toggle/force Control Mode field input (Control Mode Status).*
    - Confirm that valve goes from LOCAL to SCADA-MANUAL/SCADA-AUTO mode within the PAC logic.

- Confirm that HMI graphic changes to match field input at the following locations:
  - Pump Pop-Up
  - Process Screen (Text Below Valve)
  - Event Page
  - OIT (if applicable)

- **SCADA-MANUAL/SCADA-AUTO Selection** (Simulation Enabled)
  - Toggle SCADA-MANUAL/SCADA-AUTO selection through HMI.
  - Confirm that valve goes from SCADA-MANUAL to SCADA-AUTO mode within the PAC logic.
  - Confirm that the HMI graphic changes to match field input at the following locations:
    - Valve Pop-Up
    - Process Screen (Text Below Valve)
    - Event Page
    - OIT (if applicable)

- **Field Point – Status** (Simulation Enabled)
  - *Toggle/Force Fully Open field input to ON.*
  - *Toggle/Force Fully Closed field input to OFF.*
  - Verify valve transition and indicates valve OPEN condition.
  - Confirm that the HMI graphic changes to match open condition at the following locations:
    - Valve Pop-Up
    - Process Screen (Text Below Valve & Valve Symbol)
    - Event Page
    - OIT (if applicable)
  - *Toggle/Force Fully Open field input to OFF.*
  - *Toggle/Force Fully Closed field input to ON.*
  - Verify valve transition and indicates CLOSED condition.
  - Confirm that the HMI graphic changes to match closed condition at the following locations:
    - Valve Pop-Up
    - Process Screen (Text Below Valve & Valve Symbol)
    - Event Page
    - OIT (if applicable)

- **SCADA-MANUAL Operation** (Simulation Enabled)
  - Open valve from HMI Valve Pop-Up.
    - Confirm Open Valve DO point comes ON and Close Valve DO point is OFF at the PAC card.
    - Confirm that Open Request Timer is timing in the PAC logic.
  - *Toggle/force Valve Open field input to ON.*

- *Toggle/force Valve Closed field input to OFF.*
  - Confirm Valve symbol changes colour to Red (Fully Open).
- Close valve from HMI Valve Pop-Up.
  - Confirm Open Valve DO point is OFF and Close Valve DO point turns ON at the PAC card.
  - Confirm that Close Request Timer is timing in the PAC logic.
- *Toggle/force Fully Open field input to OFF.*
- *Toggle/force Fully Closed field input to ON.*
  - Confirm valve symbol changes colour to Green (*Fully Closed*).

- **Virtual Alarms** (Simulation Disabled)
  - Issue an open command from HMI Valve Pop-Up.
    - Confirm that 'Fail to Open' alarm is received at HMI and OIT (if applicable).
  - ACK alarm – confirm that alarm resets.
  - *Toggle/force Valve Open field input to ON.*
  - *Toggle/force Valve Closed field input to OFF.*
    - Confirm that 'Uncommanded Open' alarm is received at HMI and OIT (if applicable).
  - ACK alarm – confirm that alarm resets.
  - Issue a close command from HMI Valve Pop-Up.
    - Confirm that 'Fail to Close' alarm is received at HMI and OIT (if applicable).
  - ACK alarm – confirm that alarm resets.
  - *Toggle/force Valve Open field input to OFF.*
  - *Toggle/force Valve Closed field input to ON.*
    - Confirm that 'Uncommanded Close' alarm is received at HMI and OIT (if applicable).
  - ACK alarm – confirm that alarm resets.

2.4 Modulating Valve Test Procedure

- **Local/Remote Selection** (Simulation Enabled)
  - *Toggle/force Control Mode field input (Control Mode Status).*
    - Confirm that valve goes from LOCAL to SCADA-MANUAL/SCADA-AUTO mode within the PAC logic.
  - Confirm that HMI graphic changes to match field input at the following locations:
    - Valve Pop-Up
    - Process Screen (Text Below Valve)
    - Event Page
    - OIT (if applicable)

- **SCADA-MANUAL/SCADA-AUTO Selection** (Simulation Enabled)
  - Toggle SCADA-MANUAL/SCADA-AUTO selection through HMI.

- Confirm that valve goes from SCADA-MANUAL to SCADA-AUTO mode within the PAC logic.
- Confirm that the HMI graphic changes to match field input at the following locations:
  - Valve Pop-Up
  - Process Screen (Text Below Valve)
  - Event Page
  - OIT (if applicable)

- **Field Point – Running Status** (Simulation Enabled)
  - *Set Valve Position Feedback to above 5%.*
  - Confirm that the HMI graphic changes to match running condition at the following locations:
    - Pump Pop-Up
    - Process Screen (Text Below Valve & Valve Symbol)
    - Event Page
    - OIT (if applicable).
  - *Set Valve Position Feedback to below 5%.*

- **SCADA-MANUAL Operation** (Simulation Enabled)
  - Place Valve into SCADA-MANUAL Mode from HMI Valve Pop-up.
  - *Set Valve Position Feedback to 0%.*
  - Open Valve from HMI Valve Pop-Up by setting the Position Setpoint to above 5%.
    - Confirm Open Valve AO point reflects setpoint in the PAC card.
    - Confirm that Position Request Timer is timing in the PAC logic.
    - Confirm Valve Position Deviation (Response Failure) Alarm appears when Valve Position Setpoint and Valve Position Valve Feedback difference exceeds Deviation Alarm % Setpoint (Default 5%).
  - *Set Valve Position Feedback to match the manual setpoint.*
    - Confirm Speed Deviation Alarm disappears.
    - Confirm Valve Position indication at HMI process screen and valve pop-up.
    - Confirm pump symbol changes colour to Red (Open).
  - Close Valve from HMI Valve Pop-Up by setting the Position Setpoint to below 5%.
    - Confirm Open Valve AO point reflects setpoint in the PAC card.
    - Confirm that Position Request Timer is timing in the PAC logic.
  - *Set Valve Position Feedback to match the manual setpoint.*
    - Confirm Valve symbol changes colour to Green (Closed).
    - Confirm Setpoint Deviation Alarm disappears.

- **Virtual Alarms** (Simulation Disabled)

- *Set Valve Position Feedback to 0%.*
- Open Valve from HMI Valve Pop-Up by setting the Position Setpoint to above 5%.
- *Wait 30 seconds.*
- Confirm Valve Position Deviation (Response Failure) Alarm appears when Valve Position Setpoint and Valve Position Valve Feedback difference exceeds Deviation Alarm % Setpoint (Default 5%).

2.5 Miscellaneous I/O

This section corresponds to the testing and validation of miscellaneous devices which are not part of a major piece of equipment or MCC/Control panel.

- *Toggle/force field input.*
  - Confirm that Event/Alarm is received at HMI and OIT (if applicable).
- ACK alarm at Alarm Summary screen or Analog Pop-up – confirm that alarm acknowledged but does not reset.
- *Toggle/force field input.*
  - Confirm that Event/Alarm clears at HMI and OIT (if applicable).

2.6 Analog Alarms

This section corresponds to the testing and validation of analog devices such as transmitters and analyzers providing a 4-20mA feedback signal to the PAC.

2.6.1 Analog Level Alarming

- *Set Level to a point between the LO and HI setpoints found in the analog pop-up and acknowledge any alarms.*
  - Confirm that analog pop-up shows no alarms.

- *Set Level to a point just below LO setpoint found in the Analog pop-up.*
  - Confirm that Analog Pop-up shows a LO Level alarm.
- *Acknowledge the alarm.*
  - Confirm that LO Alarm is acknowledged and remains on the pop-up, alarm banners, and alarm summary window.

- *Set Level to a point just below LOLO setpoint found in the Analog pop-up.*
  - Confirm that the Analog pop-up shows a LOLO Level alarm.
- *Acknowledge the alarm.*
  - Confirm that LOLO Alarm is acknowledged and remains on the pop-up, alarm banners, and alarm summary window.

- *Set Level to a point just above HI setpoint found in the Analog pop-up.*
  - Confirm that the Analog pop-up shows a HI Level alarm.
- *Acknowledge the alarm.*
  - Confirm that HI Alarm is acknowledged and remains on the pop-up, alarm banners, and alarm summary window. Confirm the LO and LOLO alarms are no longer present.

- *Set Level to a point just above HIHI setpoint found in the Analog pop-up.*
  - Confirm that the Analog pop-up shows a HIHI Level alarm.
- *Acknowledge the alarm.*
  - Confirm that HIHI Alarm is acknowledged and remains on the pop-up, alarm banners, and alarm summary window.

- *Set Level to a point between the LO and HI setpoints found in the Analog pop-up and acknowledge any alarms.*
  - Confirm that the Analog pop-up shows no alarms.

2.6.2 Analog Alarm Enable/Disables

- *Open Level analog pop-up.*
- *Click on the Advanced Button on the Analog Pop-up.*
- *Disable the Level Analog 'Alarms'.*
  - Confirm Bit address changes to match.
- *Enable the Level Analog 'Alarms'.*
- *Disable the Level Analog HIHI Alarm.*
  - Confirm Bit address changes to match.
- *Enable the Level Analog HIHI Alarm.*
- *Disable the Level Analog HI Alarm.*
  - Confirm Bit address changes to match.
- *Enable the Level Analog HI Alarm.*
- *Disable the Level Analog LO Alarm.*
  - Confirm Bit address changes to match.
- *Enable the Level Analog LO Alarm.*
- *Disable the Level Analog LOLO Alarm.*
  - Confirm Bit address changes to match.
- *Enable the Level Analog LOLO Alarm.*
- *Disable the Level Analog Signal Error Alarm.*
  - Confirm Bit address changes to match.
- *Enable the Level Analog Signal Error Alarm.*
- *Disable the Level Analog Scan.*
  - Confirm Bit address changes to match.
- *Enable the Level Analog Scan.*
- *Alter Level Engineering Units scaling.*

- Confirm Level Engineering Units have changed in PAC to Match and verify Engineering Units.
- *Return Level Engineering Units to normal span.*

Inland Empire Utilities Agency
A MUNICIPAL WATER DISTRICT

3.0 Device Test Summary Tables

3.1 Constant Speed Pump/Motor Test Summary Table

	Test Parameter	WW01SLP10000	WW01SLP20000	WW01SLP30000	WW01SLP40000	WW02SLP10000	WW02SLP20000	WW02SLP30000	WW02SLP40000		Comments
CONSTANT SPEED (DISCRETE) MOTOR/DEVICE	Tagname Correct on HMI & OIT										
	Control Mode Status										
	Running Status										
	Emergency Stop Alarm										
	General Alarm (Overload)										
	Leak/Temperature (MiniCAS) Alarm										
	Softstarter Fault Alarm										
	Start Float/Backup Status										
	Stop Float/Backup Status										
	SCADA-Manual Request (Security Applied)										
	Start Command (Security Applied)										
	Fail to Start Alarm										
	Uncommanded Start Alarm										
	Stop Command (Security Applied)										
	Fail to Stop Alarm										
	Uncommanded Stop Alarm										
	Runtime Value										
	Runtime Reset (Security Applied)										
	Number of Starts Today Counter										
	No. of Starts Today Reset (Security Applied)										
	Number of Faults Counter										
	No. of Faults Reset (Security Applied)										

SAMPLE

Inland Empire Utilities Agency
A MUNICIPAL WATER DISTRICT

3.2 Variable Speed Pump/Motor Test Summary Table

	Test Parameter	HD002HLP01VFD 01	HD002HLP02VFD 01	HD002HLP03VFD 01	HD002HLP04VFD 01	HD002HLP05VFD 01	HD002HLP06VFD 01	HD002HLP07VFD 01			Comments
VARIABLE FREQUENCY SPEED (ANALOG) MOTOR/DEVICE	Tagname Correct on HMI & OIT										
	Control Mode Status										
	VFD Bypass Mode Status										
	Running Status										
	Emergency Stop Alarm										
	General Alarm (Overload- Bypass)										
	Leak/Temperature (MiniCAS) Alarm										
	VFD Fault Alarm										
	Start Float/Backup Status										
	Stop Float/Backup Status										
	SCADA-Manual Request (Security Applied)										
	Start Command (Security Applied)										
	Fail to Start Alarm										
	Uncommanded Start Alarm										
	Stop Command (Security Applied)										
	Fail to Stop Alarm										
	Uncommanded Stop Alarm										
	VFD Speed Feedback										
	VFD Speed Setpoint (Accepted)										
	VFD Speed Deviation Alarm										
	Runtime Value										
	Runtime Reset (Security Applied)										
	Number of Starts Today Counter										
	No. of Starts Today Reset (Security Applied)										
	Number of Faults Counter										
	No. of Faults Reset (Security Applied)										

SAMPLE

3.3 Discrete (Open/Close) Valve/Device Test Summary Table

	Test Parameter	WW01SLP1DGV01	WW01SLP1DGV02	WW01SLP2DGV01	WW01SLP2DGV02	WW02SLP1DGV01	WW02SLP1DGV02	WW02SLP2DGV01	WW02SLP2DGV02		Comments
MOTORIZED VALVE/DEVICE (DISCRETE)	Tagname Correct on HMI & OIT										
	Control Mode Status										
	Opened Status										
	Closed Status										
	General Alarm (Overload)										
	SCADA-Manual Request (Security Applied)										
	Open Command (Security Applied)										
	Fail to Open Alarm										
	Uncommanded Open Alarm										
	Close Command (Security Applied)										
	Fail to Close Alarm										
	Uncommanded Close Alarm										
	Number of Faults Counter										
	No. of Faults Reset (Security Applied)										

SAMPLE

Inland Empire Utilities Agency
A MUNICIPAL WATER DISTRICT

3.4 Modulating (Analog) Valve/Device Test Summary Table

	Test Parameter	HD002HLP01VFD 01	HD002HLP02VFD 01	HD002HLP03VFD 01	HD002HLP04VFD 01	HD002HLP05VFD 01	HD002HLP06VFD 01	HD002HLP07VFD 01			Comments
MODULATING (ANALOG) VALVE/DEVICE	Tagname Correct on HMI & OIT										
	Control Mode Status										
	General Alarm										
	Position Feedback										
	Position Setpoint (Accepted)										
	Setpoint Deviation Alarm										
	Number of Faults Counter										
	No. of Faults Reset (Security Applied)										

SAMPLE

3.5 Miscellaneous I/O Test Summary Table

	Test Parameter	TAGNAME	POINT CONFIRMED	Comments
MISCELLANEOUS I/O	Smoke/Heat Alarm			
	Flood Alarm			
	Door Status			
	Key Switch Status			
	Temperature Alarm			
	Power Failure Alarm			
	High Level Float Alarm			
	Etc…			

SAMPLE

Inland Empire Utilities Agency
A MUNICIPAL WATER DISTRICT

3.6 Analog Alarms

	Test Parameter	HD06ASTN01LIT01	HD06ASTN01LIT02	HD06AHLP01PIT01	HD06AHLP02PIT01	HD06AHLP03PIT01	HD06AHLP04PIT01	Comments
ANALOG ALARMS	HiHi Alarm							
	High Alarm							
	Low Alarm							
	LoLo Alarm							
	Signal Error Alarm							
	Alarms Enable/Disable							
	HiHi Alarm Enable/Disable							
	High Alarms Enable/Disable							
	Low Alarms Enable/Disable							
	LoLo Alarms Enable/Disable							
	Signal Error Alarm Enable/Disable							
	Scan Enable/Disable							
	Feedback Displayed							
	Engineering Units (modifiable)							
	Tagname Correct							

SAMPLE

Inland Empire Utilities Agency
A MUNICIPAL WATER DISTRICT

4.0 AUTOMATIC SETPOINTS Test Summary Table

	Test Parameter	RANGE	DEFAULT	POINT CONFIRMED	Comments
AUTOMATIC PROGRAM	Duty 1 Start Setpoint Level	0 –___ m	0.98 m		
	Duty 1 Stop Setpoint Level	0 –___ m	0.5 m		
	Level Transmitter Duty (LIT01/LIT02)	LIT01/LIT02	LIT01		
	Duty Rotation (Enable/Disable)	Enable/Disa	Enabled		
	Duty Alternation Duration	0-7 days	2 days		
	Duty Alternation on Time	Enable/Disa	Enabled		
	Max Starts/Hour (Enable/Disable)	Enable/Disa	Enabled		
	Etc…				

SAMPLE

Inland Empire Utilities Agency
A MUNICIPAL WATER DISTRICT

5.0 AUTOMATIC PROGRAM FUNCTION TEST SUMMARY TABLE

	Test Parameter*	CONFIRMED (✓)	Comments
AUTOMATIC PROGRAM FUNCTION VERIFICATION	When level is below all pump stop setpoints, all pumps should be stopped.		
	When wet well level is above a start setpoint for pump, confirm that the pump is asked to start and run at 0% operational speed (where applicable.		
	If wet well level is greater than the start setpoint but lower than the maximum speed setpoint, ensure that the pump is being asked to run at a speed between 0 and 100 percent operational speed based proportionally on the wet well level.		
	Confirm that in VFD bypass mode deviation alarms will be ignored.		
	Confirm auto shutdown of pump (only when 1 pump is running) to allow for duty alternation and subsequent re-start of pump (if required).		
	Confirm duty alternation can only occur when only one or no pumps are running.		
	Confirm duty alternation occurs when maximum number of starts per hour (moving window) is greater than operator entered setpoint.		
	Etc…		

SAMPLE

* Test parameters are to be extracted from the approved Process Control Narrative. Break down narrative into functional control points to be individually tested. Samples included in the table are for demonstration purposes only.

Inland Empire Utilities Agency
A MUNICIPAL WATER DISTRICT

	Test Parameter*	CONFIRMED (✓)	Comments
SOFTWARE INTERLOCKS	Booster Pump shuts down on LoLo Chlorine Alarm		
	Booster Pump shuts down on HiHi Chlorine Alarm		
	Booster Pump shuts down on HiHi Pressure Alarm		
	Booster Pump shuts down on Low Flow Alarm		
	Booster Pump shuts down on HiHi Turbidity Alarm		
	Standby Booster Pump cannot be started when station is running on generator power.		
	Pump cannot be started until UV System Ready status received		
	Etc.		

SAMPLE

* Test parameters are to be extracted from the approved Process Control Narrative. Break down narrative into functional control points to be individually tested. Samples included in the table are for demonstration purposes only.

Inland Empire Utilities Agency
A MUNICIPAL WATER DISTRICT

	Test Parameter*	CONFIRMED (✓)	Comments
FAILURE RESPONSE	Pump reverts to float control on LIT failure.		
	Pump shuts down on loss of communications with elevated tank level.		
	Pump reverts to pressure control on loss of communications.		
	Pump stops when E-Stop pressed and cannot be started when E-stop is depressed.		
	Pump shuts down on Pressure Transmitter.		
	Pump continues running until pump discharge valve is fully closed.		
	Duty rotates on lead pump failure.		
	Etc.		

SAMPLE

* Test parameters are to be extracted from the approved Process Control Narrative. Break down narrative into functional control points to be individually tested. Samples included in the table are for demonstration purposes only.

Inland Empire Utilities Agency
A MUNICIPAL WATER DISTRICT

6.0 POST-Test Review

- *Discussion of Deficiencies and concerns (if necessary).*
- *Review proposed re-FAT, installation, SAT date(s).*
- *New Business.*

Item	Deficiency Description	Initials	Initials
1			
2			
3			
4			
5			
6			
7			
8			
9			
10			

Signatures:

IEUA Representative (Date) Programmer/Integrator (Date)

Consultant (Date) Programmer/Integrator (Date)

Notes:

Inland Empire Utilities Agency
A MUNICIPAL WATER DISTRICT

Section 4-Electrical and I&C-Appendices

iv Network Infrastructure Specification

AVAD ENGINEERING

iv Network Infrastructure Specification

Network Infrastructure Specification

Requirements Document for Project Managers and Contractors

Revision: 1.0

Date: 5/1/2024

Document History

Title	Network Infrastructure Specification: Requirements Document for Project Managers and Contractors
Version	1.0
Date of issue	5/1/2024
Owner	IEUA Information Technology, Finance and Administration Div.
Confidentiality	Public

Purpose

This document outlines the requirements and specifications for IEUA networks. It serves as a guide for project managers and contractors involved in the design, implementation, and management of the network infrastructure, ensuring compliance with the organization's standards, best practices, and project objectives.

Introduction

The successful execution of any project relies on a robust and reliable network infrastructure. This document aims to provide clear guidelines and specifications for the network infrastructure components, ensuring seamless communication, data transfer, and connectivity.

Project managers and contractors are responsible for adhering to the specifications outlined in this document, ensuring that the network infrastructure meets the Agency's functional requirements, security standards, and performance expectations. By following these guidelines, project teams can ensure consistent implementation, interoperability, and scalability of the network infrastructure across multiple project sites or locations.

This document covers aspects of physical network infrastructure, including:

Network Components and Equipment Specifications

Cabling and Wiring Standards

Performance and Scalability Considerations

Testing and Acceptance Criteria

Documentation and Handover Procedures

Project managers and contractors are expected to thoroughly review and understand the requirements outlined in this document before commencing any network infrastructure design or implementation activities. Adherence to these specifications is crucial for maintaining consistency, ensuring smooth operation, and enabling future scalability and maintenance of the network infrastructure.

The network infrastructure specifications provided in this document are subject to periodic review and updates to align with emerging technologies, industry best practices, and the evolving needs of the organization. Project managers and contractors are responsible for ensuring they are working with the latest version of this document

Contents

Purpose **3**

Introduction **3**

1. General requirements **5**

1.1 Diverse connectivity 5

1.2 Data outlet type and distribution 5

1.3 Wireless infrastructure 5

1.4 Cabling etc. requirements 5

1.5 Connection of equipment 6

2. External services **6**

2.1 Duct routes and construction 6

2.2 Duct access 6

2.3 External cabling and micro ducts 6

3. Wiring centers **8**

3.1 Connectivity 8

3.2 Access 8

3.3 General design and layout 8

3.4 Power and environment 9

3.5 Signage 9

4. Data outlet distribution **10**

4.1 Design and planning 10

4.2 Installation 11

4.3 Office areas 11

4.4 Meeting and seminar rooms 11

4.5 Open and communal areas 12

4.6 Mechanical and storerooms 12

4.7 Outdoor spaces 12
4.8 Wireless 13
5. Data cabinets 14
5.1 Preferred type 14
5.2 Layout 14
5.3 Installation 18
6. Labelling 20
6.1 External fiber optic cabling 20
6.2 Internal fiber optic cabling 20
6.3 Fiber optic patch panels 22
6.4 Data outlets 22
6.5 Patch panels 22
7. Acceptance testing and documentation 23
7.1 Structured cabling 23
7.2 Fiber optic installations 23
8. Connected equipment 24
8.1 Registration 24
8.2 Prohibitions 24
9. Approved manufacturers and cabling systems 25
9.1 Augmented Category 6 (Cat.6A) infrastructure 25
9.2 Blown fiber components 25
10. Compliance 26
10.1 Legislative compliance 26
10.2 Technical Compliance. 26
10.3 Approved installers 26
11. Document updates, website references and IT Service Desk details 27
11.1 General requirements 27

11.2 Device Registration IP Address Contact 27

11.3 IT Service Desk details 27

1. General requirements

1.1 Diverse connectivity

All facilities shall be provided with two or more separate and dedicated ICT (Information and Communication Technology) duct routes for resilience. Interconnections between facilities shall be made using fiber optic cable in micro ducts. See ***Section 2*.**

Interconnections between wiring centers within the same building shall be made using standard fiber optic cable supplemented by 24 No. Augmented Category 6 (hereafter referred to as Category 6A or Cat 6A) copper cables as directed by IEUA (Inland Empire Utilities Agency).

Interconnections between wiring centers and buildings shall be designed as schematics by IEUA.

1.2 Data outlet type and distribution

All building spaces shall be provided with data outlets in quantity and positions in accordance with ***Section 4***. All data outlets shall be fitted in pairs, *i.e.* as “dual” outlets. See also ***Section 1.4***.

Data outlet layouts designed by a project architect or project manager shall be approved by IEUA before preliminary acceptance. Preliminary and final acceptances are conditional on receipt of documentation described in ***Section 7***.

1.3 Wireless infrastructure

All building spaces shall be provisioned with data outlets for wireless access points (Wi-Fi, wireless APs) in accordance with ***Section 4.9***. Owing to the rapidly changing technology, design shall be done only by IEUA or Agency designated contractors.

1.4 Cabling etc. requirements

Any work involving installation, re-installation, modification, or movement of data outlets requires that the outlets be re-tested and re-certified (see ***Section 7***).

All data outlets shall be dual RJ45 outlets to Category 6A (ANSI/TIA-568) standard unless previously agreed with IEUA and chosen from the products listed in ***Section 9***.

All horizontal cabling (*i.e.* cabling connecting RJ45 data outlets) shall be made with approved products and terminated in data cabinets in accordance with ***Section 5*** and ***Section 9***.

No cable run shall be longer than 90m (328ft). Where necessary, a building shall be provided with more than one wiring center.

All cabinet layouts shall be designed or approved by IEUA.

Acceptance of data cabling and associated infrastructure by IEUA is conditional on receipt of documentation as described in ***Section 7***.

1.5 Connection of equipment

All network infrastructure equipment such as switches, routers, wireless APs, etc. shall be supplied, installed, and patched only by IEUA or personnel under direct contract to IEUA.

No switches, routers, wireless controllers, wireless APs etc. shall be used or installed by contractors for the purpose of connecting to or communicating with other equipment unless under instruction from IEUA.

2. External services

2.1 Duct routes and construction

All buildings other than “satellite” buildings (see below) shall be provided with two or more diverse ICT duct routes, each having a minimum of two 4-inch ducts, for resilience. These shall be in addition to and separate from, ducts required for all other services including electrical supply, dedicated alarm systems and commercial telecommunications providers.

Designation of a building or wiring center as “subsidiary” or “satellite” is at the sole discretion of IEUA. In general a “satellite” wiring center is one which is sited in a satellite building such as a pumping station and which services 24 or fewer outlets, with no current or future requirement for onward feeds to other wiring centers.

Where a building has only one wiring center, the duct systems may both terminate in that wiring center. Otherwise, they shall terminate in different wiring centers.

Where diverse duct systems enter a building at the same location, their point of divergence shall be at no greater distance than 5m from the point of entry to the building, and there shall be an access chamber at the point of divergence.

External ducts for fiber optic and other connections between buildings shall be twin walled rigid duct, minimum 4-inch diameter, externally ribbed with a smooth interior.

All ducts shall be provided with polypropylene draw ropes to facilitate pulling additional cables, and when used for this purpose, draw ropes shall be replaced.

2.2 Duct access

Manhole covers over splicing or access chambers shall be robust and meet any requirements laid down by IEUA or appropriate municipal authority.

Access chambers for data ducts shall be independent of access chambers for other services, such as power, heating, water, control cabling, etc.

2.3 External cabling and micro ducts

Data connections between buildings shall be made using fiber optic cables. Copper cables are not permitted between buildings.

The default standard for fiber optic cables is 48 core single mode to OS2 (9/125)

specification or better. Where IEUA specifies multimode fiber optic cable, this shall be to OM3 (50/125) specification or better.

Fiber optic interconnections between wiring centers and buildings shall be designed as schematics by IEUA.

Wherever possible, interconnections between buildings shall be made using blown micro cable fiber in approved micro ducts; between buildings the micro-ducts shall be installed within the normal ducts.

Where blown fiber is not used an armored cable must be used *e.g.* corrugated steel taped (CST) or steel taped armored (STA).

External fiber optic cables shall be labelled at each end and in each access chamber according to the convention in ***Section 6.1***. Micro ducts shall be labelled at each end, in each access chamber and where they are diverted or “tee’d” from the rest of the bundle, in the same style. The color of micro ducts must not change along their length.

Fiber optic cables for external connections shall be terminated in metal patch panel boxes fitted with duplex LC connectors. The patch panel boxes shall be 1U high and accommodate 24 duplex connectors (48 fiber cores). The rear cable entries shall be slotted to permit removal of the cable without the need to cut and re-terminate it. Single mode and multimode fiber terminations shall not be mixed on the same 1U panel.

Each pair in a fiber optic installation shall be fitted as a crossover. Because fiber optic connections require overall Tx-to-Rx crossover connections, this is essential in order to preserve an odd number of Tx-to-Rx crossovers when patching.

Fiber optic termination panels shall be labelled in accordance with ***Section 6.3*** and tested in accordance with ***Section 7.2***.

3. Wiring centers

3.1 Connectivity

Wiring centers, other than those explicitly designated by IEUA as “satellite” wiring centers (see ***Section 2.1***), shall be provided with no less than two separate fiber optic connections to other wiring centers, for resilience. Note that this requires each building to have a minimum of two duct routes to other buildings.

3.2 Access

Wiring center rooms shall be secure (lockable). Key and/or combination issue shall be restricted to, and at the discretion of IEUA staff.

Access must be available to authorized IEUA staff, including out-of-hours. Note that this may require consideration of access route, alarms, etc.

Access to personnel other than IEUA and their contractors is prohibited.

Access for contractors will be by arrangement with IEUA. All keys shall be signed out from IEUA and shall be returned to IEUA directly.

3.3 General design and layout

Wiring centers shall consist of a dedicated room provisioned with appropriate services (see ***Section 3.4***). The room shall not be used for storage, or any other purpose not directly related to the delivery of IEUA network and data services. Wiring centers shall not be used for powering site distribution equipment, other than those dedicated to the operation of the wiring center.

Certain other building services shall be excluded from wiring centers. These include but are not limited to water supplies, drains (including drainpipes), and heating pipes.

There must be no water or liquid pathway, sources, or outlets in the ceiling above the cabinet(s). This includes wastewater pipes, chilled water pipes, hot water pipes, sewer pipes, and rainwater downpipes.

New wiring centers shall be capable of accommodating an appropriate number of data cabinets to meet total outlet count with allowance for 30% future growth. Each cabinet must be 19in wide by 24in deep and minimum 42U high. Clearance is required to provide access space of a minimum of 40in to front and rear, and 40in to at least one side.

Wiring centers shall be equipped with an appropriate floor covering, such as antistatic vinyl or tiles, or in certain cases by prior agreement with IEUA, painted concrete. Carpet and carpet tiles are not acceptable.

After construction and decoration, and before any active equipment can be fitted, the wiring center shall be thoroughly cleaned to eliminate all dust and debris, including the interiors and tops of data cabinets.

3.4 Power and environment

Adequate ventilation and/or cooling shall be provided to maintain the room temperature below 79°F based on a nominal thermal load of 1kW per data cabinet and data cabinet location.

All rack-mounted devices will have air intake in the front of the rack, and exhaust in the rear – where possible – the relative direction of which will be determined by IEUA. Any exceptions are to be noted and pre-authorized by IEUA.

Each wiring center shall be provided with a means of fire detection, connected to the Agency fire alarm system and optionally to any relevant building management system.

Each data cabinet shall be provided with a minimum of 1No. IEC 60309-2 16A (2P+E) outlet fed from a dedicated mains supply. This circuit should feed the data cabinet in such a manner as to prevent trip hazards from trailing cables and shall be provided with a method of isolation within easy reach and outside of the cabinet *e.g*. a rotary isolator in the circuit located on a wall adjacent to the cabinet between 3ft to 5ft from finished floor level. Where multiple data cabinets are installed power cables shall not pass through one data cabinet to reach another.

Each wiring center requires a minimum of one 15A duplex outlet for general small power.

Lighting within the wiring center should take into account the number and location of data cabinets with levels meeting the minimum requirements set by other IEUA specification documents.

Where possible power and data should be delivered to cabinets at high level on suitable ladder or cable trays.

3.5 Signage

The door to each wiring center shall be labelled with the IEUA space code in accordance with the requirements of the Agency and shall in addition have a small sign stating “Restricted Access.”

Within each wiring center, all data cabinets shall have a sign affixed to the front door stating “This wiring center is managed by IEUA IT. No additions or alterations to equipment or cabling may be made except by IEUA IT.”

4. Data outlet distribution

4.1 Design and planning

Data outlet quantities and locations shall be designed by or in consultation with IEUA Network staff before construction. Subject to the foregoing and the rest of this section, data outlet layout may be designed by a project architect or project manager but shall be approved by IEUA before preliminary acceptance. Such approval shall be conditional on receiving lists of quantities and drawings indicating proposed layout.

High-level data outlet quantities and locations for wireless AP's shall be designed by IEUA (see ***Section 4.9***).

Designs shall be produced in accordance with or to exceed the minimum data outlet requirements detailed in ***Sections 4.3*** to ***4.9*** and in accordance with any additional requirements of the Agency Department which will occupy or be responsible for the space.

All data outlets shall be fitted in pairs, as "twin" or "dual" RJ45 outlets. All components of the installation shall be to Category 6A standard unless previously agreed with IT Services, shall be chosen from a single range of the products listed in ***Section 9***, and shall only be installed by an installer approved by the manufacturer for that product range (see ***Section 10***).

No data cable run shall be longer than 328ft. Where necessary to comply with this requirement, a building shall be provided with more than one wiring center, suitably located, and connected by fiber optic cable to two other wiring centers. Any cable run exceeding 90m (328ft) in length will fail the standards tests and will not be accepted.

Wiring runs shall be in wire trays within equipment rooms, risers, ceiling voids, and loft spaces. In under-floor spaces, where outlets are to be in floor boxes, galvanized sheet trays may be used instead of wire trays to facilitate fitting flexible conduit. Where wiring runs are not in such spaces they shall be enclosed in plastic trunking on the surface of a wall. In some locations, mini-trunking may require painting to be discreet and/or to avoid reflections.

Designers should note that Category 6A cable is significantly thicker than older types and should use one of the readily available cable containment calculators to ensure adequate containment provision.

Dado trunking, back boxes, floor boxes and containment must be specified to have sufficient depth to accommodate the bending radius of Category 6A cable from any of the approved cabling systems listed in ***Section 9.***

Where floor boxes and containment are set permanently into the floor an allowance for at least 100% expansion should be made.

4.2 Installation

All data outlets shall be labelled in accordance with the IEUA scheme detailed in ***Section 6.4.***

All horizontal cabling (i.e. cabling connecting RJ45 data outlets) shall be made with approved products, terminated in data cabinets in accordance with ***Section 5*** and certified to comply with the relevant standards.

Cable bundles shall be secured with Velcro cable ties, or an equivalent cable tie: designed to be reused and prevent any possibility of crushing or deforming of the cable. Non-reusable cable management (i.e. Zip Ties) are to be pre-authorized by IEUA. All cable management should allow for a minimum of 50% expansion.

When installing cable in new containment or conduit the contractor shall allow for 50% future expansion. However, this requirement may be relaxed in the case of flexible conduit attached to individual floor boxes, if by prior agreement with IEUA.

All data cabling must be one continuous unjointed length from patch panel to outlet and shall not have splices or in-line connectors other than those integral to the patch panel and the room outlet. No “consolidation points” shall be used.

For reasons of warranty, cables shall not be installed by one contractor and terminated/tested by another unless by prior approval from IEUA.

Final acceptance of an installation is conditional on receipt of documentation by IEUA as described in ***Section 7***.

IEUA staff will not patch or “make live” any outlet until it has been finally accepted as above.

4.3 Office areas

Each workstation location in office space shall have at least 2No RJ45 dual data outlets (*i.e.* four outlets). Compliance with EN50173 or IEC 11801 requires that a *minimum* of 2No data outlets be provided at each work area. In multiple-occupancy offices, compliance will require an allowance for alternative workstation positions, for example by fitting sockets on opposite walls, not just along one wall. Note that no patch cable is permitted to be longer than 16ft, nor to be routed where it could constitute an obstruction, a trip hazard or other health and safety hazard.

4.4 Meeting and seminar rooms

Each seminar or meeting room shall be provisioned with sufficient dual data outlets to service a telephone, audio-visual equipment, at least one wireless access point, and at least one accessible dual data outlet at the rear of the room.

Meeting and seminar rooms may have unique requirements for occupancy, audio-visual and accessory equipment. IEUA IT must be consulted for specific audio- visual equipment network requirements.

4.5 Open and communal areas

Open areas shall be provided with at least one dual data outlet to support a digital signage system, printers, etc.

Open areas shall be provided with adequate high-level dual data outlets for wireless access points as designed by IEUA (**s**ee ***Section 4.9***).

Communal areas such as kitchens shall each be provided with at least one dual data outlet to support a telephone, one high-level dual data outlet to support a wireless access point.

4.6 Mechanical and storerooms

Mechanical rooms require at least one data outlet for each piece of networked equipment, plus at least one spare and always fitted in pairs. BMS (Building Management System) equipment must not be connected via local Ethernet switches. Mechanical rooms in buildings which are not otherwise provided with network connectivity shall in addition require a fiber-optic feed from a nearby wiring center, and a suitable mounting for a network switch.

Storage rooms larger than 12sqft require one dual data outlet.

4.7 Outdoor spaces

As the requirements for outdoor spaces can vary significantly, the network infrastructure will be designed/approved by IEUA on a case-by-case basis but will typically include:

- A duct to a nearby building hosting an MDF or IDF.
- A fiber connection
- Somewhere to host network switch(es) e.g. a 19” vertical frame or 19” data cab
- Minimum 2No. 15A grounded duplex outlet supplying the network equipment
- Cat 6A cabling internal to the structure to service AV, Wi-Fi, and CCTV units
- Provision to mount Wi-Fi APs

AV and other service providers such as the IEUA SCADA (Supervisory Control and Data Acquisition) team as they will have further power and data requirements.

4.8 Wireless

The requirement for design and layout by IEUA for data outlets supporting wireless access points shall be included in any design specification for new or refurbished building work.

Inclusion of dual data outlets for wireless access points shall be included in designs for corridors, open spaces, office space, communal areas, and other areas that may be advised by IEUA.

Prior to commencement of cabling work, Single Line DWG files shall be provided to IEUA so that modelling software can be used to determine precise quantities and locations of dual data outlets for wireless access points.

Wireless access points shall be provisioned and installed with due regard to wireless and client density, interference, propagation differences at different wavelengths including 2.4GHz and 5GHz and using different modulation techniques including but not limited to 802.11a/b/g/n/ac, interaction with neighbor wireless access points, and any building features or construction which may impede the signals. Note that modern wireless systems use increasingly higher cell densities and smaller cells and therefore require increasingly closely and regularly spaced data outlets.

IEUA are responsible for all radio operations in the 2.4GHz and 5GHz bands in Agency facilities and no equipment other than that provided by IEUA or operating under their written permission shall be installed or operated in or adjacent Agency premises.

Dual data outlets for wireless access points shall be either wall-mounted at high level, or such as to allow for ceiling-mounted access points, to be decided by IEUA according to the type and model of wireless access point planned.

High-level outlets and mounting bracket positions for wall-mounted access points shall be fitted at a height of approximately 7ft 6in from the floor, but in all situations shall be fitted with a clearance of at least 12in between the ceiling and the centerlines of both the data outlet and the mounting bracket.

Data outlets intended to serve horizontal ceiling-mounted access points shall be located in such a position as to be readily accessible to authorized IEUA staff without the use of specialist tools or equipment for the purpose of patching to the access point when fitted or serviced.

Where external Wireless Access Points are required weather proofed infrastructure shall be used. Additional earth bonding shall be installed under guidance from IEUA.

The contractor shall install brackets and wireless access points supplied by the IEUA (internal and external) as required and under guidance from the IEUA.

5. Data cabinets

5.1 Preferred type

The preferred cabinet type for office wiring centers is the Hoffman ProLine range. Preferred cabinet type for industrial wiring centers is Hoffman ProLine G2 range. Alternative products shall only be installed with the prior agreement of IEUA.

Cabinets shall be standard 19" type, minimum 42U high (where ceiling height allows), 32in wide x 42in deep.

Wall-mounted data cabinets shall not be used, unless agreed in advance by IEUA, as this precludes the installation of the routers/network switches required to feed Wireless Access Points, IP telephony, CCTV, and certain other equipment.

Each cabinet shall be fitted with standard locks and ventilated doors.

Each cabinet shall be floor-standing and fitted with a plinth at the base. In exceptional cases, cabinets may be fitted with suitably rated levelling feet (but not casters) by prior agreement with IEUA.

Each cabinet shall be internally fitted with two cable trays running vertically, and positioned on each side, slightly to the rear of the center line. The front rails must be mounted back 10cm from the door to allow clearance for patch cables.

Cabinets shall be supplied with side rail mounted cable management, *e.g*. 20No. “Elite jumper ring radius knuckles” for a 42U cabinet.

5.2 Layout

Cabinet layouts shall be designed by IEUA. Contractors shall not install patch panels until they are in receipt of IEUA cabinet layouts.

Layout within general purpose cabinets shall be arranged to accommodate eight groups of patch panels and switches, each group being 4U high. These shall be spaced to allow for the addition of one additional 1U (44mm) Ethernet switch in each group, allowing for a maximum of sixteen 24-way patch panels and a maximum of 384 RJ45 positions.

There shall be no more than sixteen patch panels and 384 RJ45 connections in any cabinet, unless by prior agreement with IEUA.

Major wiring centers may require one cabinet laid out in suitable form to accommodate one or more chassis switches for network routing, as illustrated below.

Major wiring centers may require one cabinet reserved for Facilities Management equipment including but not limited to AV equipment, CCTV equipment, Access control equipment, etc. Allowance will be made for third-party equipment such as CCTV equipment and cabinet space will be allocated by IEUA following receipt of space requirements from third parties.

Fiber panels shall be installed starting at the bottom of cabinets, leaving 2U (88mm) at the bottom of the cabinet for cable management.

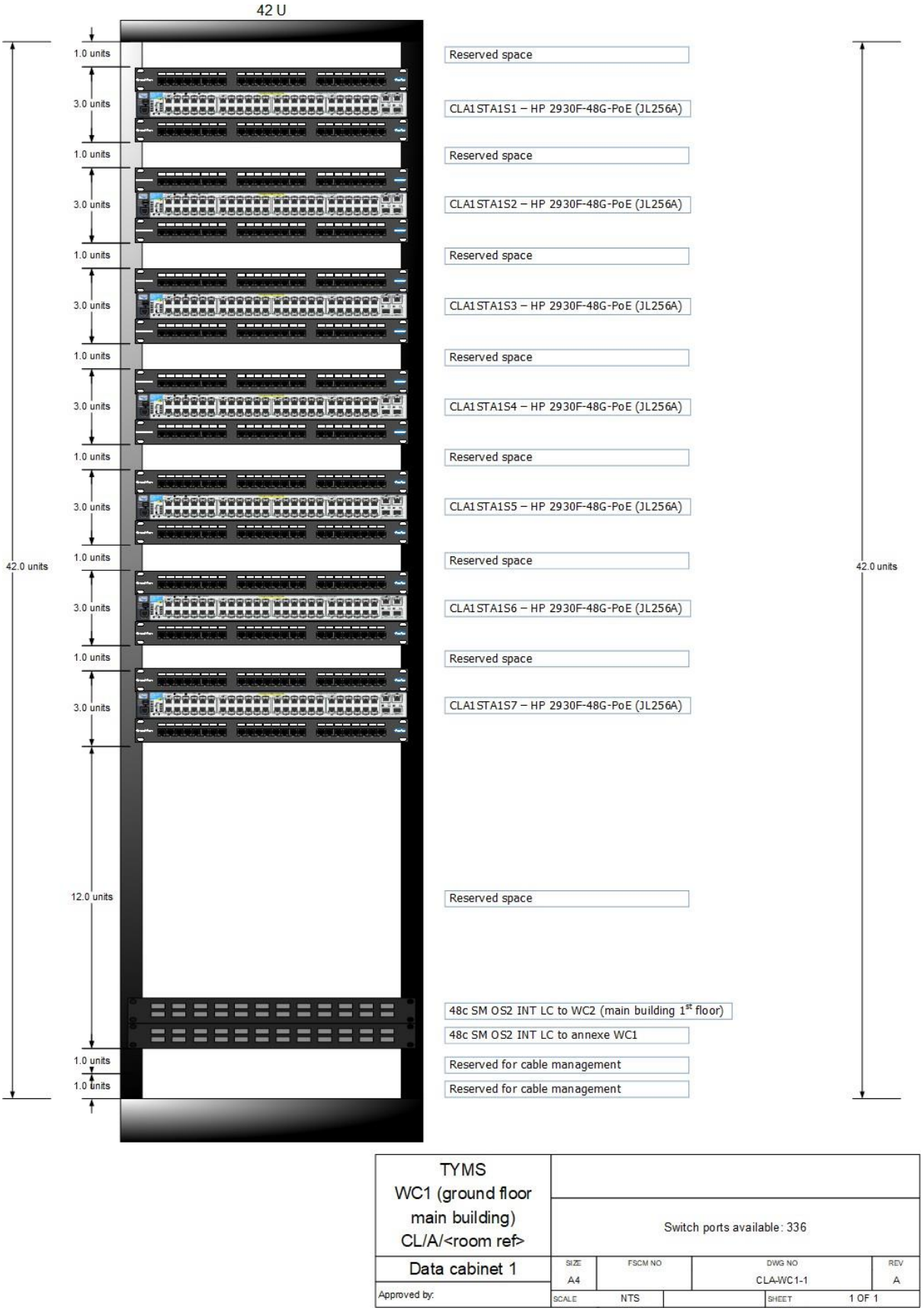

Figure 1. *Example of standard cabinet layout diagram, accommodating 14 patch panels and up to 336 data outlets; space has been left for more sets.*

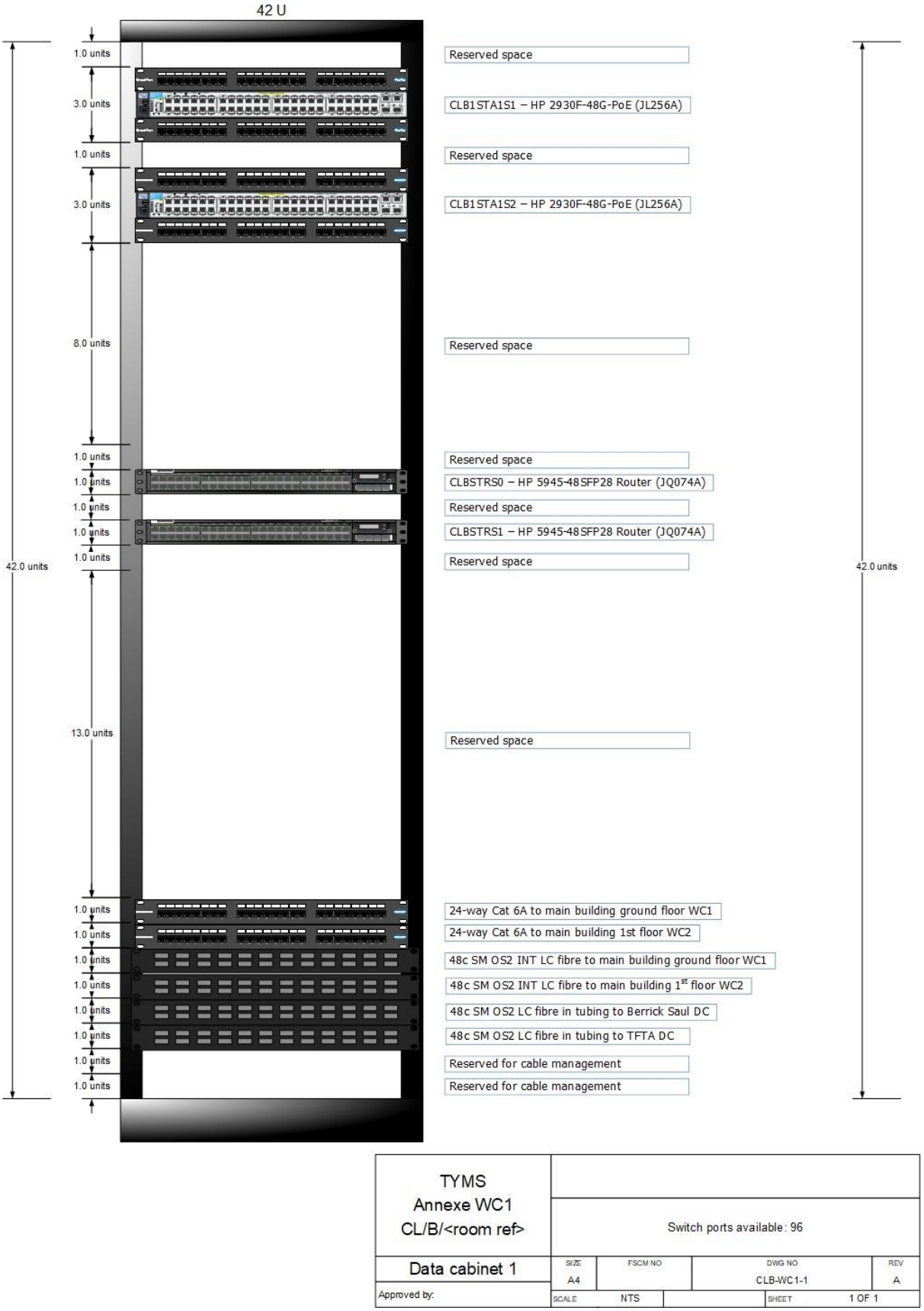

Figure 2. *Example of layout diagram for the first cabinet in a major wiring center, accommodating two chassis switches for network routing, and several fiber optic panels.*

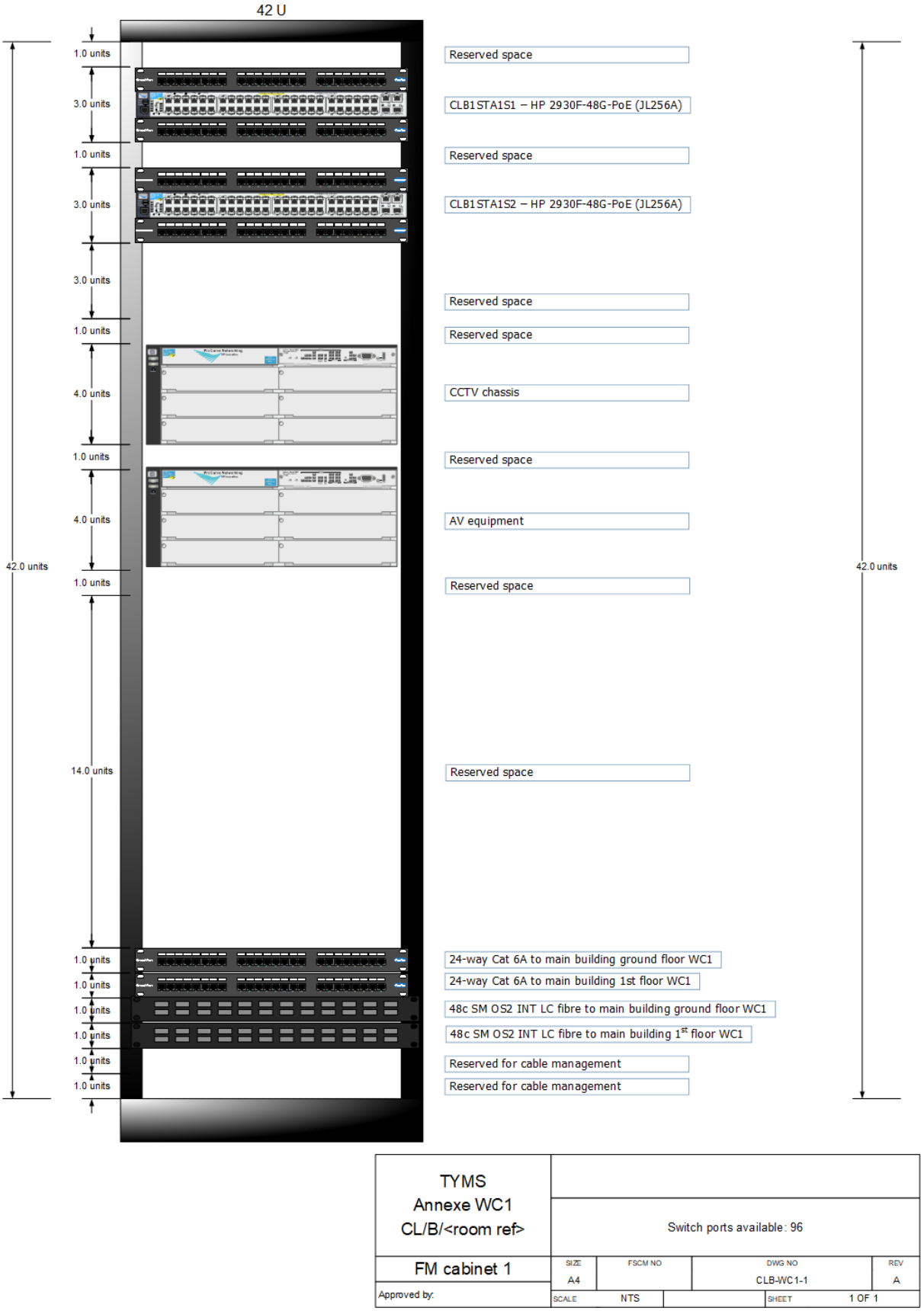

Figure 3. *Example of layout diagram for a "Facilities Management" cabinet in a major wiring center, accommodating third-party equipment and associated fiber optic panels.*

5.3 Installation

Wiring centers, including the exterior and interior of data cabinets, shall be cleaned and free of dust and debris before installation of any active equipment.

Patch panels and other equipment shall be fitted using M6 pan-head Pozidrive screws only, secured to M6 cage nuts.

All equipment shall be aligned vertically on 1U boundaries.

By prior agreement with IEUA only, equipment which is not inherently rack-mounting may be installed on a fixed shelf which shall be aligned on a 1U boundary.

Within cabinets, cable bundles shall be enclosed in cable socks up to the point at which the bundles are split out into individual cables and shall be affixed to cable trays with Velcro or equivalent non-crushing cable ties.

Sufficient slack shall be left in cable bundles to allow minor repositioning of panels, to at least 1U up or down.

Cables in cabinets shall be suitably dressed such that there is clear space for unimpeded installation of active equipment to the full depth of the cabinet between any two adjacent patch panels.

In multi-story buildings, outlet terminations for each floor or equivalent aggregated area shall be made on its own group or groups of panels, and wherever practical in its own data cabinet.

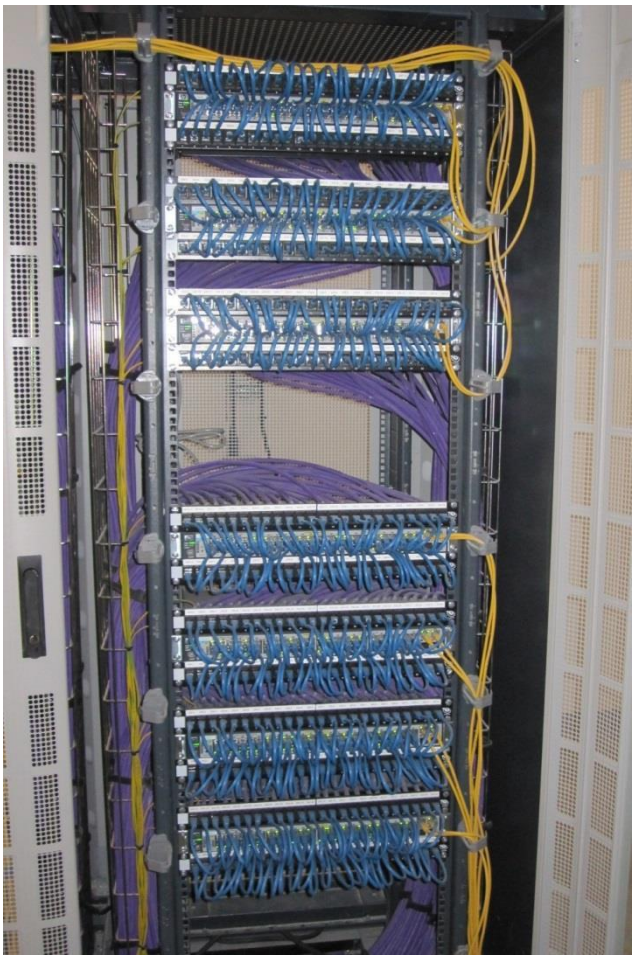

Figure 4. *Cabinet layout after patching with 0.25m patch leads, showing groups of two 1U 24-port Cat.6A patch panels, located above and below a 48 port PoE switch. Note gaps left to facilitate maintenance and airflow. Note also the dressing of the infrastructure cables to facilitate the switch installation.*

When additional outlets are installed from any wiring center, unused sections of patch panels shall be utilised before adding additional patch panels.

Data patch panels must be high-density *i.e.* 24 sockets per 1U height.

Each patch panel must be grounded to the manufacturer's specifications.

Data outlets, RJ45 patch panels and fiber optic patch panels shall be labelled in accordance with ***Section 6***.

Each cabinet must be fitted with a power distribution unit with the following features:

- Zero U
- 16A single phase input from a commando socket as detailed in ***Section 3.4***
- Minimum 10-standard grounded 15A sockets
- Bottom fed with a cord length of approx. 8ft

The PDU should be mounted at the rear of each data cab in a location which doesn't impede installation of the active equipment. Where a UPS (Uninterruptible Power Supply) is present in the wiring center, an additional un-switched PDU with IEC 320 C13 socket connectors must be fitted to each cabinet.

Each cabinet must be provided with earth bonding, which must be installed to comply with the requirements of any shielded cable which may be installed, and of IEC standards, including bonds to the doors and side panels.

Where more than one cabinet is present, they must be bolted together ("bayed").

6. Labelling

6.1 External fiber optic cabling

External fiber optic cables shall be labelled at each end and in each access chamber using a suitably durable label *e.g*. Critchley, Traffolyte or laser-etched perspex.

Cable markers should use the following convention:

- Network code i.e. PAC (process automation control) or Biz (business)
- Space character,
- Fiber core count and type,
- Space character,
- Start point consisting of building code and wiring center number,
- Space character,
- The word ‘to’,
- Space character,
- End point consisting of building code and wiring center number,
- Space character,
- Sequence number (one digit)

Example 1:

The second of two 48c SM PAC cables running between Power Center 1 wiring center 1 and Power Center 2 wiring center 1 will be labelled:

PAC 48C SM A/D PC1 1 to PC2 1

Commonly used departmental codes are:

- BIZ Business IT Services
- PAC Process Automation Control
- FAC Facilities Building Automation
- CCTV Security Services

Micro ducts shall be labelled at each end, in each access chamber and where they are diverted or “tee’d” from the rest of the bundle, in the same style as fiber optic cables.

6.2 Internal fiber optic cabling

Internal fiber optic cables shall be labelled in every inspection location *e.g*. electrical risers and to the same standard as that detailed for external fiber optic cables (see

Section 6.1).

6.3 Fiber optic patch panels

Fiber optic panels shall be labelled with the number of cores, the type of cable (single mode or multimode), the source and destination locations and the sequence number. For example:

48C SM A/D PC1 to PAC PC2 1

6.4 Data outlets

Rooms and other spaces must be allocated their final space codes before labelling data outlets or patch panels. Outlets and patch panels shall not be labelled with interim numbers which may be indicated on, for example, architect's plans prior to completion of building works.

By convention IEUA numbers rooms with three digits, of which the first is the floor number. For example, room HQA/E/131 is located in Headquarters Building A E block. All building codes and space codes will be supplied by the Agency.

Room outlets shall be labelled according to the following convention, with the elements separated by slashes '***/***' except the outlet number, which must be separated by a dash:

- building code (*e.g.* 'HQA/E' for Headquarters A E block)
- wiring center number (*e.g.* '1' for Wiring Center 1 in the building)
- room number
- outlet number within the room

Room outlets shall be clearly labelled with black lettering in a plain typeface on a white background, and the lettering shall be no less than 12-point Helvetica.

Self-adhesive labels are preferred.

6.5 Patch panels

Individual terminations on patch panels shall be labelled with room number and outlet number (only) within the room. For example, a connection to the third and fourth outlets in room 123 (in any building) would be labelled merely:

123-03 123-04

Patch panel ports shall be clearly labelled with black lettering in a plain typeface on a white background, and the lettering shall be no less than 12-point Helvetica.

Self-adhesive labels are preferred.

7. Acceptance testing and documentation

7.1 Structured cabling

IEUA will not patch or “make live” data outlets until they are in receipt of the necessary documentation described here.

All data cable related work, including cable installation, re-installation, rework, modification, or movement of data outlets, trunking or containment replacement, and any other work that involves adding, repairing, or moving outlets or their cabling shall be tested and (re)certified according to the approved regime and standards.

Acceptance of data cabling and associated infrastructure by IEUA is conditional on receipt of as-fitted drawings showing positions of the dual data outlets with correct outlet labelling, schedules of panel connections, and valid test results.

All wiring installations shall be tested to ensure conformity with Category 6A, TIA 568 or IEC 11801, or better. Note that standards are revised from time to time and adoption of the latest standards will normally be expected.

Test results shall be delivered in electronic form as Fluke Linkware files or Ideal Networks DataCenter showing the complete test results to Cat.6A standards as appropriate, for each outlet.

As-built drawings shall be delivered in electronic format as PDF and DWG documents and shall be of sufficient resolution to read data outlet designations when printed at A3 size. They shall consist of one or more A3 pages per floor, if necessary, with floors split over multiple pages with an overlap to allow for recombination.

All wiring installations must be supported by a manufacturer’s Performance Warranty or equivalent, valid for a minimum of 20 years. Documentary evidence in the form of the manufacturer’s certificate for the specific installation must be provided in support of this.

7.2 Fiber optic installations

Fiber optics shall be terminated in pairs on LC duplex connectors fitted to patch panels in accordance with ***Section 2.3***. The fiber optic cables shall be labelled in accordance with ***Section 6.1***, ***Section 6.2*** and the panels shall be labelled in accordance with ***Section 6.3***.

Each pair in a fiber optic installation shall be fitted as a crossover. Because fiber optic connections require overall Tx-to-Rx crossover connections, this is essential in order to preserve an odd number of Tx-to-Rx crossovers when patching.

All fiber installations shall be tested to produce measurements of both ILM (Insertion Loss Measurement) and OTDR (Optical Time Domain Reflectometry). ILM tests shall be conducted from both ends. The test results shall be provided to the IT Network in electronic form, either as Ideal Networks, Fluke Linkware or SOR files.

Acceptance of fiber optic cabling and associated infrastructure by IEUA is conditional on correct outlet labelling and receipt of valid test results.

8. Connected equipment

8.1 Registration

Unless otherwise directed by IEUA Network staff, equipment shall not be connected to any part of the Agency network until it has been properly registered in the LAN database, an IP address and a hostname has been allocated, and the relevant part of the “Facilities Network” has been made accessible.

Requests for allocation of IP addresses for “Facilities Management” type devices such as BMS, CCTV, Access Control, emergency lighting, alarm systems, and other equipment can be made via the web-based service desk system or by raising a call with the IT Service Desk see ***Section 11*.**

Only the contractor actually installing the equipment may request device registration.

Note that it may take several days to satisfy IP address requests, especially where the secured parts of the “Facilities Network” have to be created specially.

Equipment shall be labelled with the hostname allocated by IEUA, and this name must be included in any communication with IEUA.

If any equipment is relocated or replaced, IEUA must be informed of the change of location or MAC address and the new or relocated equipment shall not be (re)connected until authorized. In some cases this may require allocation of a different hostname.

8.2 Prohibitions

In most circumstances, all standard active network equipment (routers, switches, and WiFi access points) shall be funded by the construction/refurbishment project but specified and/or provided by the IEUA. Exceptions to this are to be negotiated with the IEUA in advance of the project.Other, specialist equipment that includes an element of networking may be provided by contractors but can only be connected to the network through consultation with IEUA.

No local or private network switches or wireless devices are permitted on the IEUA network. All devices must be connected directly to IEUA network outlets or APs.

No other equipment operating in the 2.4GHz or 5GHz bands is permitted on the IEUA network, except with the written permission of IEUA.

All other network-connected equipment shall be installed by the relevant contractor, in compliance with safety and positioning requirements advised by IEUA and shall be connected directly to a data outlet.

9. Approved manufacturers and cabling systems

9.1 Augmented *Category 6 (Cat.6A) infrastructure*

Solutions are welcomed from the following manufacturers:

Leviton shielded Cat 6A

Hellerman Tyton shielded Cat 6A

Siemon shielded Cat 6A

9.2 Blown fiber components

10. Compliance

10.1 Legislative compliance

All solutions must comply with current building code

10.2 Technical Compliance.

All structured cabling systems and their installation must comply with the following standard as applicable. As these standards are updated from time to time a contractor is expected to work to the latest version:

IEC/ISO 11801

10.3 Approved installers

For reasons of warranty, all installations must be undertaken by a contractor that is a manufacturer approved installer for the system being installed (see ***Section 9)*** with the installation backed by a minimum 20-year manufacturer's warranty.

11. Document updates, website references and IT Service Desk details

11.1 General requirements

This document will be updated periodically. Contractors and Project Managers should ensure they are working to the latest version by visiting: https://www.ieua.org

11.2 Device Registration IP Address Contact

To request device registration and obtain IP addressing details please

contact the IT Service Desk (*see* ***Section 11.3***)

11.3 IT Service Desk details

To contact the IT Service Desk to request a device registration or raise a general inquiry please call +1 909 993 1470 or e-mail: support@ieua.atlassian.net

Inland Empire Utilities Agency
A MUNICIPAL WATER DISTRICT

Section 4-Electrical and I&C-Appendices

v Project Design ISS Requirements

AVAD ENGINEERING

v Project Design ISS Requirements

Inland Empire Utilities Agency
A MUNICIPAL WATER DISTRICT

Project Design ISS Requirements r3

1. Programming Workshops (May vary depending on project size and scope)
   a. **Agenda required prior to each workshop** Coordinate with workshop requirements in table Section 4.1, item 19.
   b. PLC, HMI/Alarming and Report/~~VantagePoint~~/Historian - at each phase/system of the project as determined by FAT requirements. AVEVA PI System
      i. SCADA Design Stage 0 - 0% 4hr minimum
         1. Workshop to review IEUA standards requirements, including tagging standard, programming layout, general interface requirements, expectations, schedule.
         2. The number and length of workshops needed to complete this stage may vary depending on the size of the project
      ii. SCADA Design Stage 1 - 25% 4hr minimum
         1. All completed programming and databases to be provided 1 week prior to workshop
         2. One portion of the workshop for ISS to review design and configuration of PLC/HMI (including trends), Historian Tags, ~~VantagePoint/~~PI, A&E, including review of any proposed user defined AOIs. AVEVA PI System
         3. One portion of the workshop for OPS/ISS to review graphics, HMI layout, Report content and format, ~~VantagePoint/~~PI model (AssetFramework).
         4. The number and length of workshops needed to complete this stage may vary depending on the size of the project
      iii. SCADA Design Stage 2 - 50% 6hr minimum
         1. programming demo
         2. All completed programming and databases to be submitted 1 week prior to workshop
         3. One portion of the workshop for ISS to review design and configuration of PLC/HMI (including trends), Historian Tags, ~~VantagePoint/PI~~, A&E, Alarms & Events including review of any proposed user defined AOIs.
         4. One portion of the workshop for OPS/ISS to review graphics, HMI layout, Report content and format, ~~VantagePoint/PI~~ model (AssetFramework).
         5. The number and length of workshops needed to complete this stage may vary depending on the size of the project
      iv. SCADA Design Stage 3 - 75% 4hr minimum
         1. Combined with programming demo
         2. All completed programming and databases to be submitted 1 week prior to workshop
         3. One portion of the workshop for ISS to review design and configuration of PLC/HMI (including trends), Historian Tags, ~~VantagePoint/PI~~, A&E, including review of any proposed user defined AOIs.
         4. One portion of the workshop for OPS/ISS to review graphics, HMI layout, Report content and format, VantagePoint/PI model (AssetFramework).
         5. The number and length of workshops needed to complete this stage may vary depending on the size of the project
2. PCN (Process control Narrative) Requirements (May vary depending on project size and scope)
   a. Template required in design to be finalized and submitted at project closeout.
3. Spare Parts
   a. All automation spare parts should be consolidated into a single list or table

   b. ~~****** Need input from Don Hamlett **********~~
4. Network and Communication Equipment
   a. Check IEUA Design Guidelines Section 4.18
5. Automation Hardware
   a. Reference Engineering Design Guideline Section 4.18
6. Project Scope
   a. Automation should be clearly defined
   b. Responsibilities should be clearly defined
   c. Review potential overlap between projects and define demarcation between projects
   d. P&ID should match I/O and tag lists and should reference each other.
7. IEUA Standards (May vary depending on project size and scope):
   a. Programming Standards
   b. Fiber Standards
   c. Design Guidelines
   d. Smart Tag Guidelines
8. Determine if and where redundancy is required:
   a. Controllers
   b. Power Supplies
   c. I/O (Assign I/O in such a way that retains the designed equipment redundancy for critical equipment. For example, 2 level transmitters for the wet well should be assigned to different I/O racks, or different I/O modules at the very least.)
   d. Network switches
9. Remote Alarm Resets
10. AC Requirements
    a. Reference Engineering Design Guideline Section 4.17
11. I/O loops should be “Wetted” locally when possible, not from I/O power supply
12. No 120 VAC fuses for control circuits only breakers.
13. UPS requirements
    a. reference Engineering Design Guideline Section 4.17
14. Fail Safe alarm and control should not be used unless specified.
15. Check Smart tags ID
16. Submittals - refer to the following: Verify submittal requirements for each Project
    a. SCADA Standards – PAC Programming Standards Section 6.2
    b. SCADA Standards – HMI Programming Standards Section 5.1
17. Project Closeout
    a. As Built drawings in editable AutoCAD format
    b. All documentation
    c. All configuration files for all instrumentation and hardware
    d. All fully commented programming
    e. Training
    f. ~~Warrantee~~
       Warranty

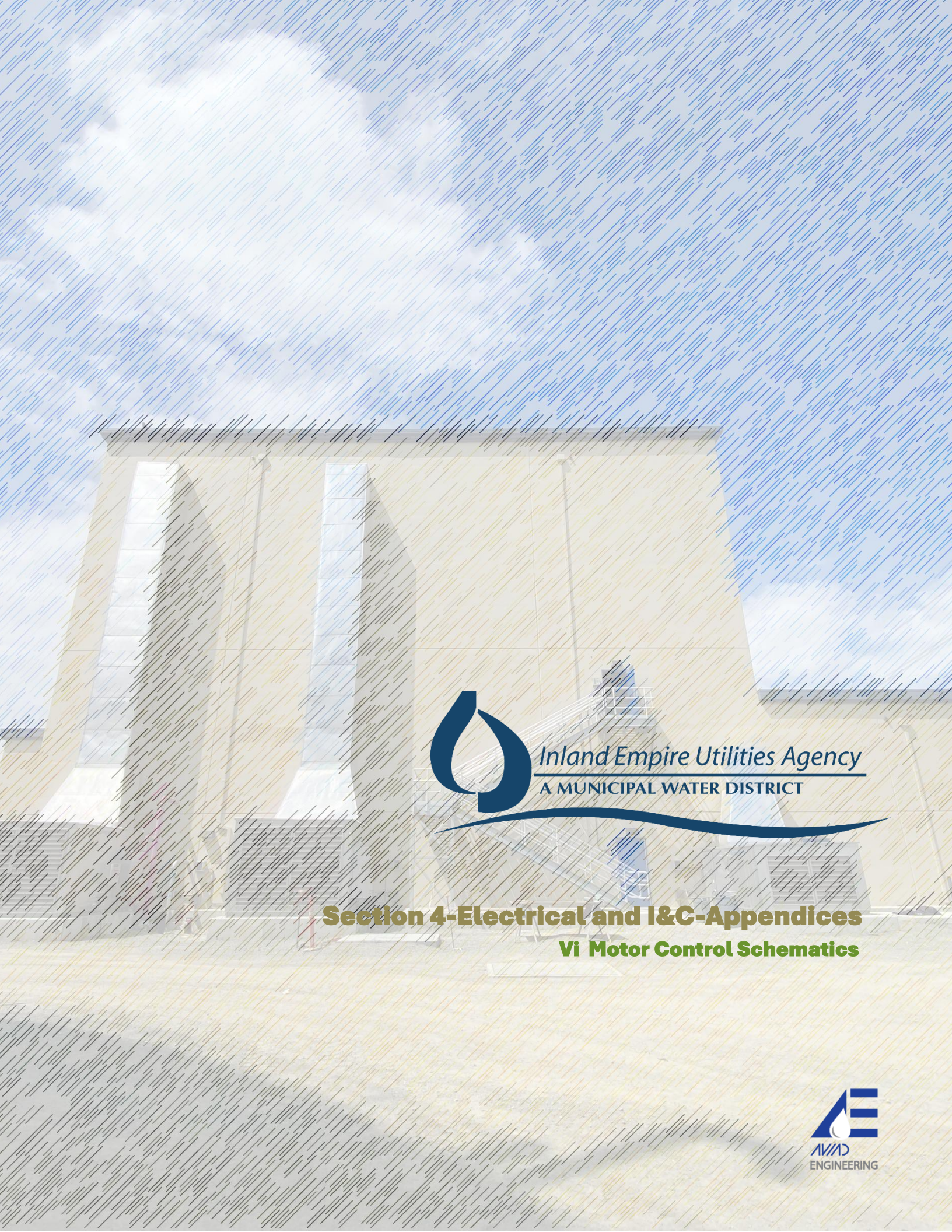

Inland Empire Utilities Agency
A MUNICIPAL WATER DISTRICT

Section 4-Electrical and I&C-Appendices

Vi Motor Control Schematics

AVAD ENGINEERING

Vi Motor Control Schematics

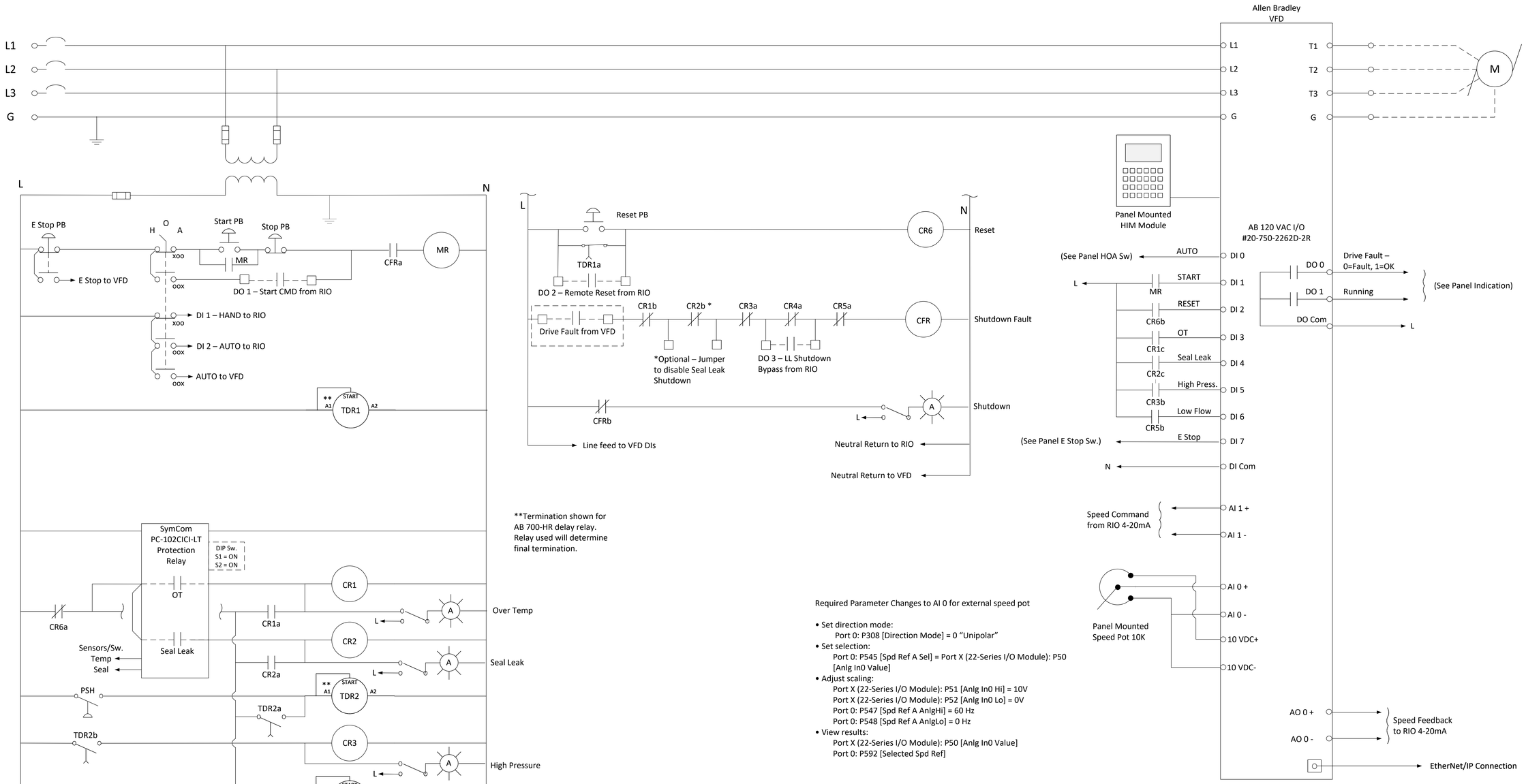

Required Parameter Changes to AI 0 for external speed pot

- Set direction mode:
  - Port 0: P308 [Direction Mode] = 0 "Unipolar"
- Set selection:
  - Port 0: P545 [Spd Ref A Sel] = Port X (22-Series I/O Module): P50 [Anlg In0 Value]
- Adjust scaling:
  - Port X (22-Series I/O Module): P51 [Anlg In0 Hi] = 10V
  - Port X (22-Series I/O Module): P52 [Anlg In0 Lo] = 0V
  - Port 0: P547 [Spd Ref A AnlgHi] = 60 Hz
  - Port 0: P548 [Spd Ref A AnlgLo] = 0 Hz
- View results:
  - Port X (22-Series I/O Module): P50 [Anlg In0 Value]
  - Port 0: P592 [Selected Spd Ref]

General Notes:

1. This design incorporates all potential faults to protect the motor during Local and Remote operation. If listed faults are not required in a particular application they can be removed and the control relay numbering should be changed to sequential ID numbers to eliminate confusion.
2. Schematic for design consideration only. Final design to be approved by Agency.
3. All submitted drawings will include line numbers and column ID with cross references, in parentheses, next to each relevant component shown within the drawings. If equipment drawings span multiple pages, the line reference number of each page shall begin at the next sequential value beyond the previous page to eliminate duplicating line reference numbers of the same equipment drawings.

Inland Empire Utilities Agency

Process Automation and Control

Standard VFD Control Schematic without Seal Water

DATE	FILE NAME	DWG NO	REV
2/5/2025			14

SCALE	1 : 1	DRW BY:	JPT		SHEET	1 OF 4

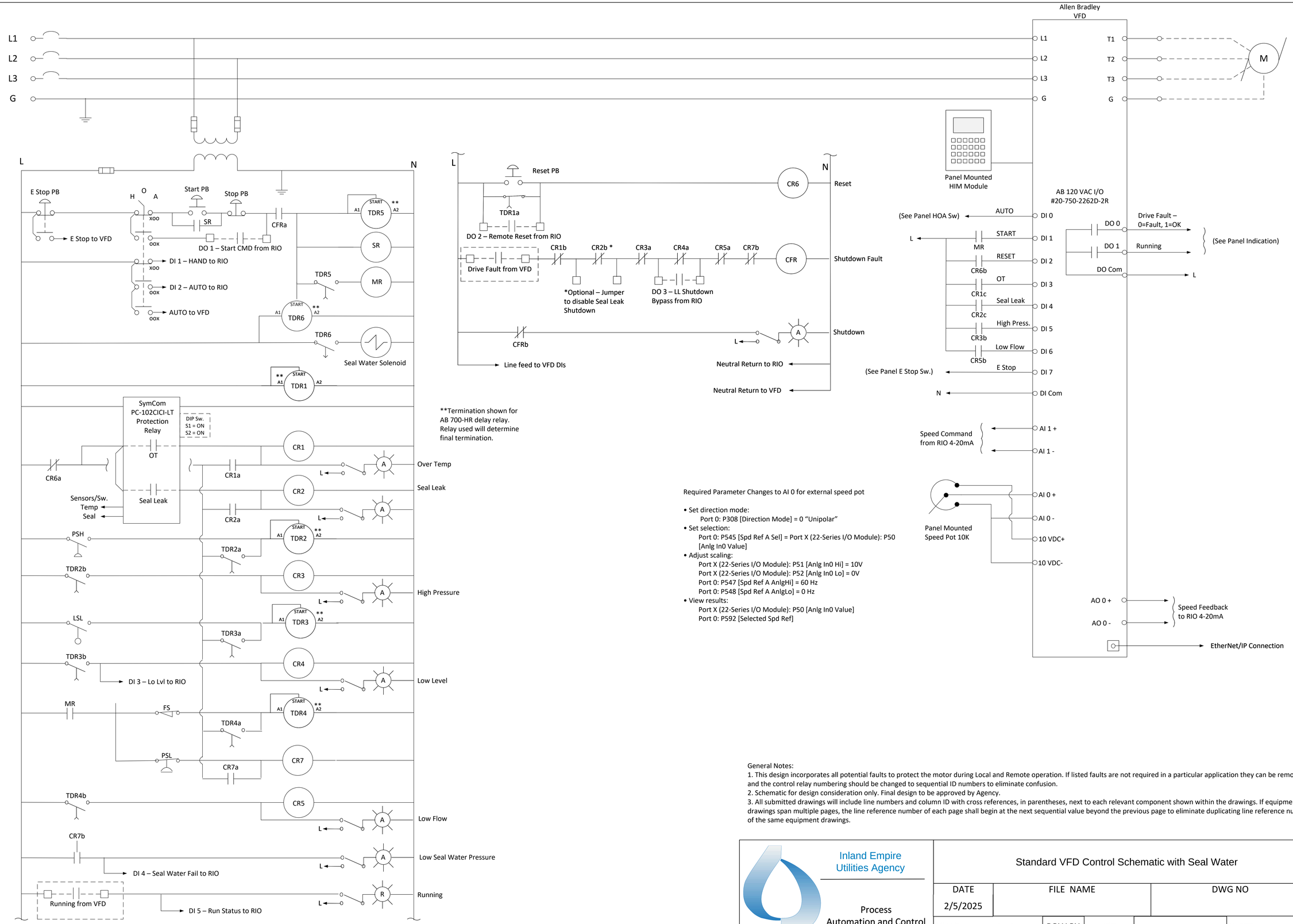

Required Parameter Changes to AI 0 for external speed pot

- Set direction mode:
  - Port 0: P308 [Direction Mode] = 0 "Unipolar"
- Set selection:
  - Port 0: P545 [Spd Ref A Sel] = Port X (22-Series I/O Module): P50 [Anlg In0 Value]
- Adjust scaling:
  - Port X (22-Series I/O Module): P51 [Anlg In0 Hi] = 10V
  - Port X (22-Series I/O Module): P52 [Anlg In0 Lo] = 0V
  - Port 0: P547 [Spd Ref A AnlgHi] = 60 Hz
  - Port 0: P548 [Spd Ref A AnlgLo] = 0 Hz
- View results:
  - Port X (22-Series I/O Module): P50 [Anlg In0 Value]
  - Port 0: P592 [Selected Spd Ref]

General Notes:

1. This design incorporates all potential faults to protect the motor during Local and Remote operation. If listed faults are not required in a particular application they can be removed and the control relay numbering should be changed to sequential ID numbers to eliminate confusion.
2. Schematic for design consideration only. Final design to be approved by Agency.
3. All submitted drawings will include line numbers and column ID with cross references, in parentheses, next to each relevant component shown within the drawings. If equipment drawings span multiple pages, the line reference number of each page shall begin at the next sequential value beyond the previous page to eliminate duplicating line reference numbers of the same equipment drawings.

Inland Empire Utilities Agency

Process Automation and Control

Standard VFD Control Schematic with Seal Water

DATE	FILE NAME	DWG NO	REV
2/5/2025			14

SCALE	1 : 1	DRW BY:	JPT		SHEET	2 OF 4

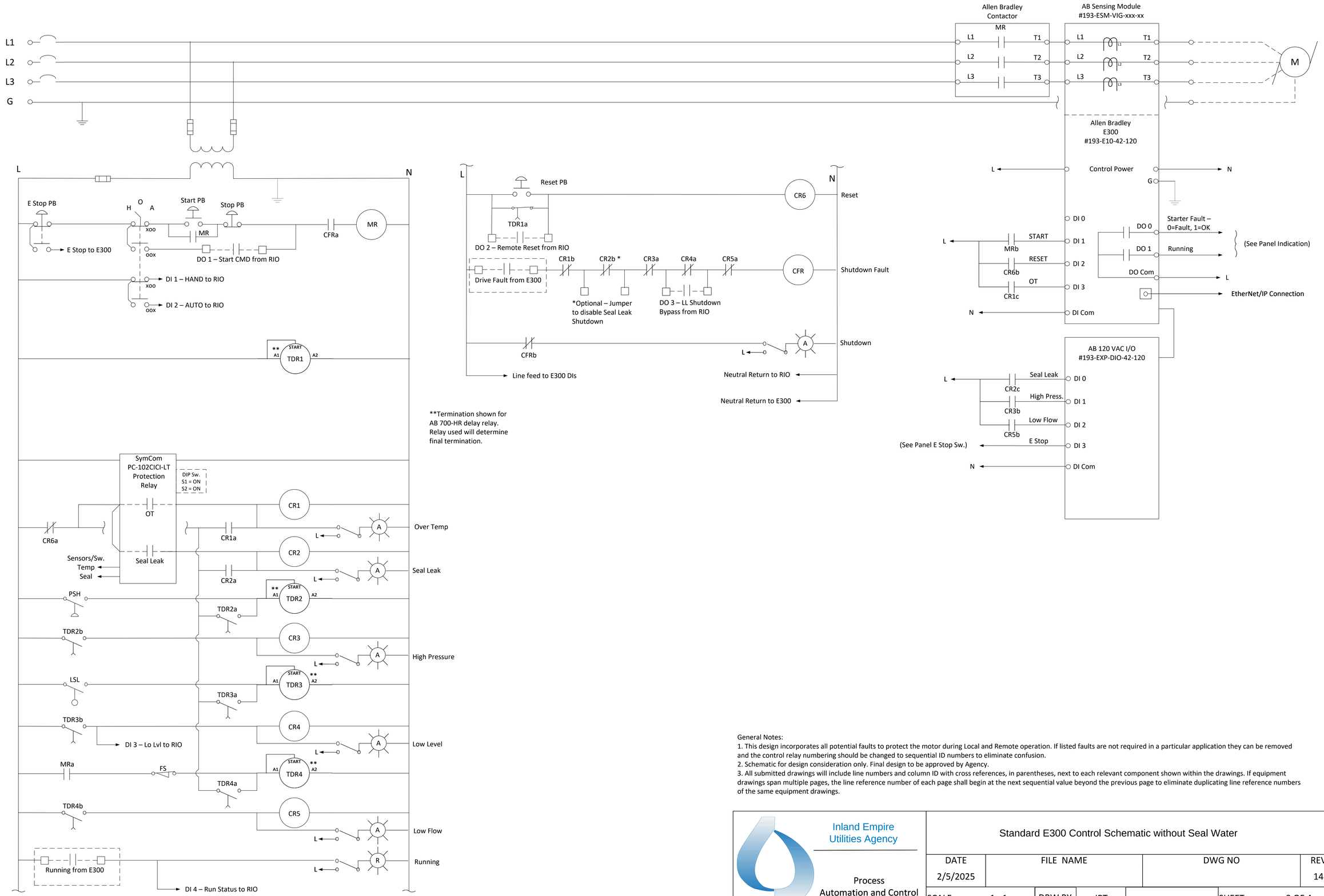

General Notes:
1. This design incorporates all potential faults to protect the motor during Local and Remote operation. If listed faults are not required in a particular application they can be removed and the control relay numbering should be changed to sequential ID numbers to eliminate confusion.
2. Schematic for design consideration only. Final design to be approved by Agency.
3. All submitted drawings will include line numbers and column ID with cross references, in parentheses, next to each relevant component shown within the drawings. If equipment drawings span multiple pages, the line reference number of each page shall begin at the next sequential value beyond the previous page to eliminate duplicating line reference numbers of the same equipment drawings.

Inland Empire Utilities Agency

Process Automation and Control

Standard E300 Control Schematic without Seal Water

DATE	FILE NAME	DWG NO	REV
2/5/2025			14

SCALE	1 : 1	DRW BY:	JPT		SHEET	3 OF 4

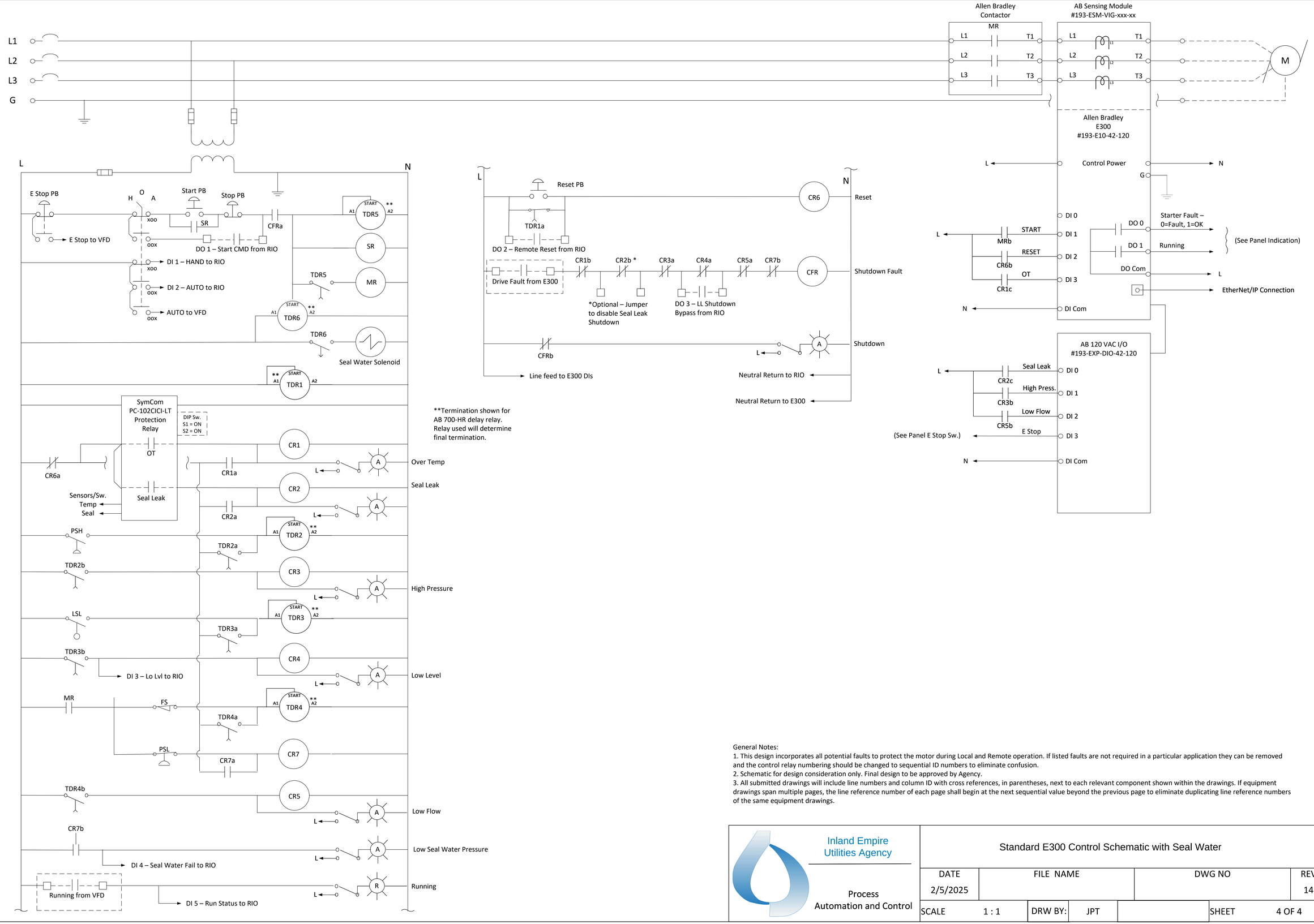

General Notes:
1. This design incorporates all potential faults to protect the motor during Local and Remote operation. If listed faults are not required in a particular application they can be removed and the control relay numbering should be changed to sequential ID numbers to eliminate confusion.
2. Schematic for design consideration only. Final design to be approved by Agency.
3. All submitted drawings will include line numbers and column ID with cross references, in parentheses, next to each relevant component shown within the drawings. If equipment drawings span multiple pages, the line reference number of each page shall begin at the next sequential value beyond the previous page to eliminate duplicating line reference numbers of the same equipment drawings.

Inland Empire Utilities Agency

Process Automation and Control

Standard E300 Control Schematic with Seal Water

DATE	FILE NAME	DWG NO	REV
2/5/2025			14

SCALE	1 : 1	DRW BY:	JPT		SHEET	4 OF 4

Inland Empire Utilities Agency
A MUNICIPAL WATER DISTRICT

Section 4-Electrical and I&C-Appendices

Vii Control Panel Power and UPS Installation Detail

AVAD ENGINEERING

Vii Control Panel Power and UP

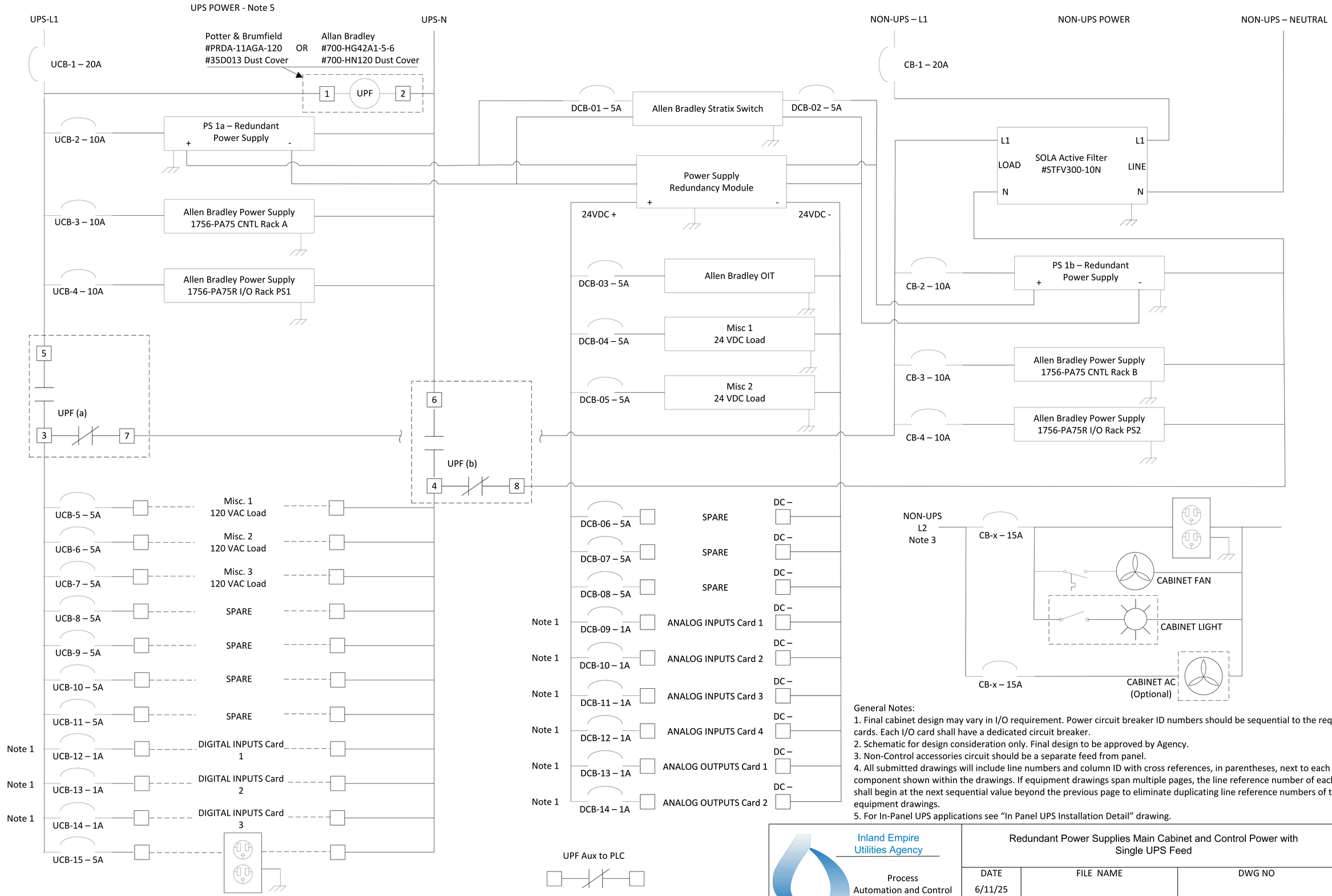

General Notes:

1. Final cabinet design may vary in I/O requirement. Power circuit breaker ID numbers should be sequential to the required I/O cards. Each I/O card shall have a dedicated circuit breaker.
2. Schematic for design consideration only. Final design to be approved by Agency.
3. Non-Control accessories circuit should be a separate feed from panel.
4. All submitted drawings will include line numbers and column ID with cross references, in parentheses, next to each relevant component shown within the drawings. If equipment drawings span multiple pages, the line reference number of each page shall begin at the next sequential value beyond the previous page to eliminate duplicating line reference numbers of the same equipment drawings.
5. For In-Panel UPS applications see "In Panel UPS Installation Detail" drawing.

Inland Empire Utilities Agency

Process Automation and Control

Redundant Power Supplies Main Cabinet and Control Power with Single UPS Feed

DATE	FILE NAME	DWG NO	REV
6/11/25			11b

SCALE	1 : 1	DRW BY:	JPT		SHEET	1 OF 7

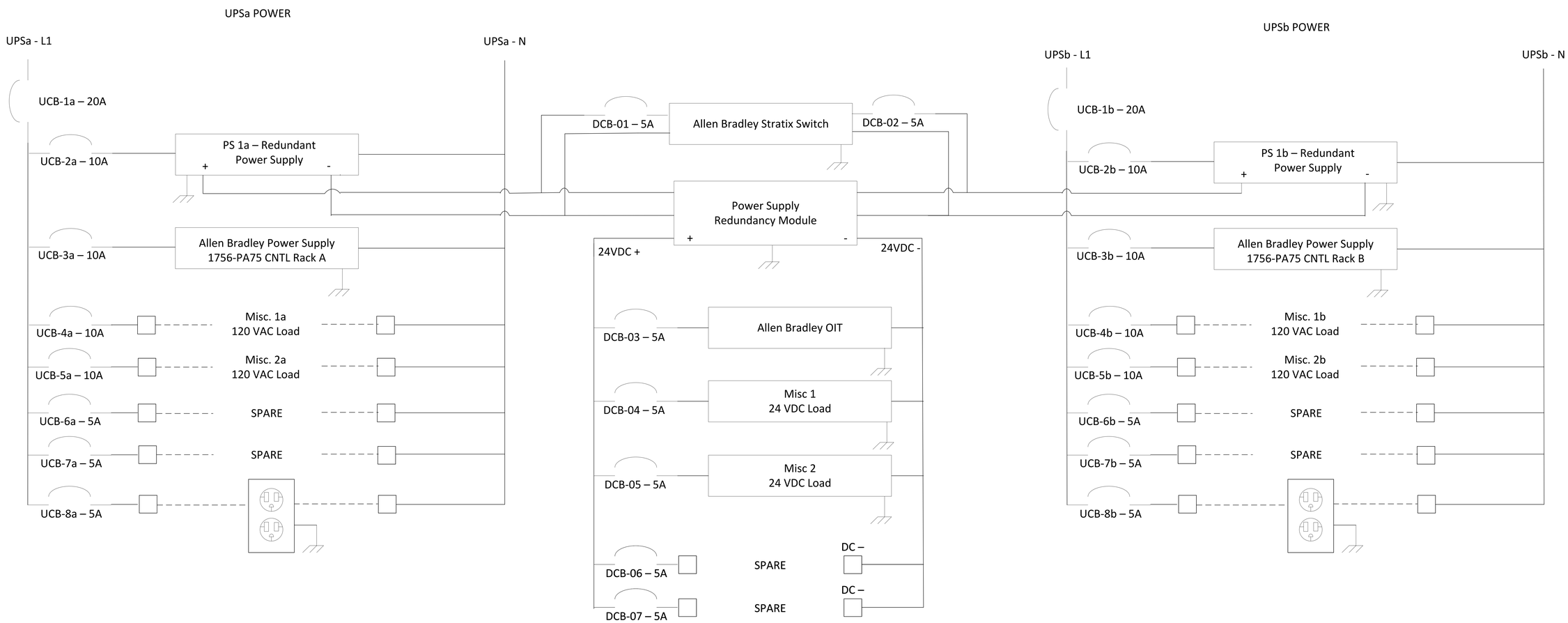

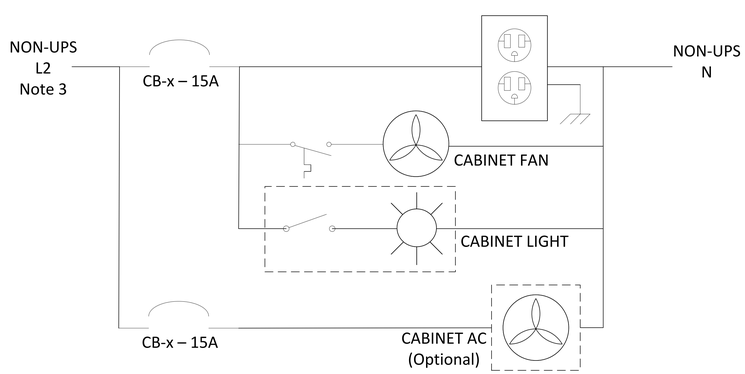

General Notes:
1. N/A
2. Schematic for design consideration only. Final design to be approved by Agency.
3. Non-Control accessories circuit should be a separate feed from panel.
4. All submitted drawings will include line numbers and column ID with cross references, in parentheses, next to each relevant component shown within the drawings. If equipment drawings span multiple pages, the line reference number of each page shall begin at the next sequential value beyond the previous page to eliminate duplicating line reference numbers of the same equipment drawings.

Inland Empire Utilities Agency

Process Automation and Control

Redundant Power Supplies Main Cabinet and Control Power with Dual UPS Feed

DATE	FILE NAME	DWG NO	REV
6/11/25			11b

SCALE	1 : 1	DRW BY:	JPT		SHEET	2 OF 7

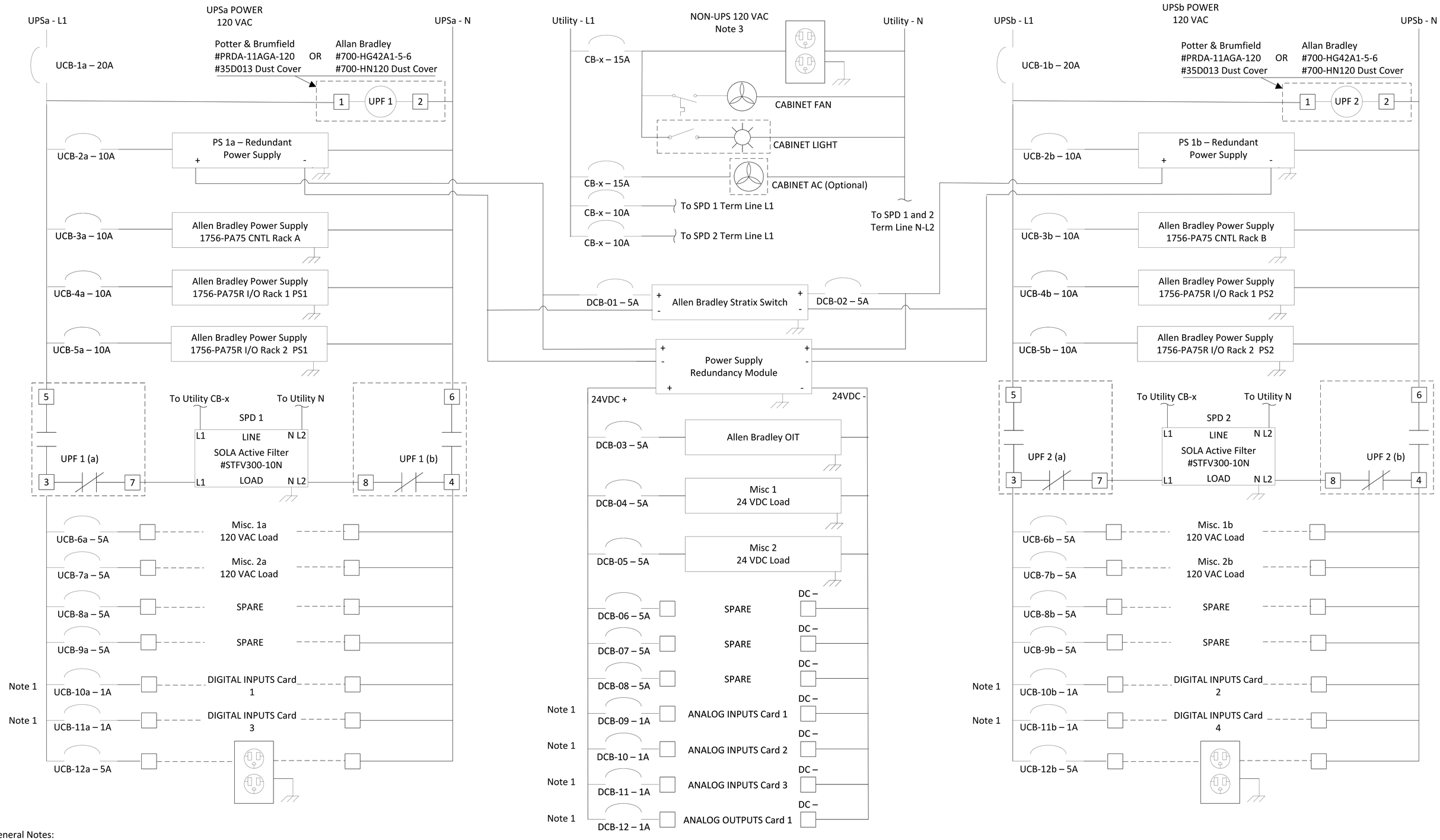

General Notes:

1. Final cabinet design may vary in I/O requirement. Power circuit breaker ID numbers should be sequential to the required I/O cards. Each I/O card shall have a dedicated circuit breaker.
2. Schematic for design consideration only. Final design to be approved by Agency.
3. Non-Control accessories circuit should be a separate feed from panel.
4. All submitted drawings will include line numbers and column ID with cross references, in parentheses, next to each relevant component shown within the drawings. If equipment drawings span multiple pages, the line reference number of each page shall begin at the next sequential value beyond the previous page to eliminate duplicating line reference numbers of the same equipment drawings.

Inland Empire Utilities Agency

Process Automation and Control

Critical Application - Redundant Power Supplies Main Cabinet and Control Power with Dual UPS Feed

DATE	FILE NAME	DWG NO	REV
6/11/25			11b

SCALE	1 : 1	DRW BY:	JPT		SHEET	3 OF 7

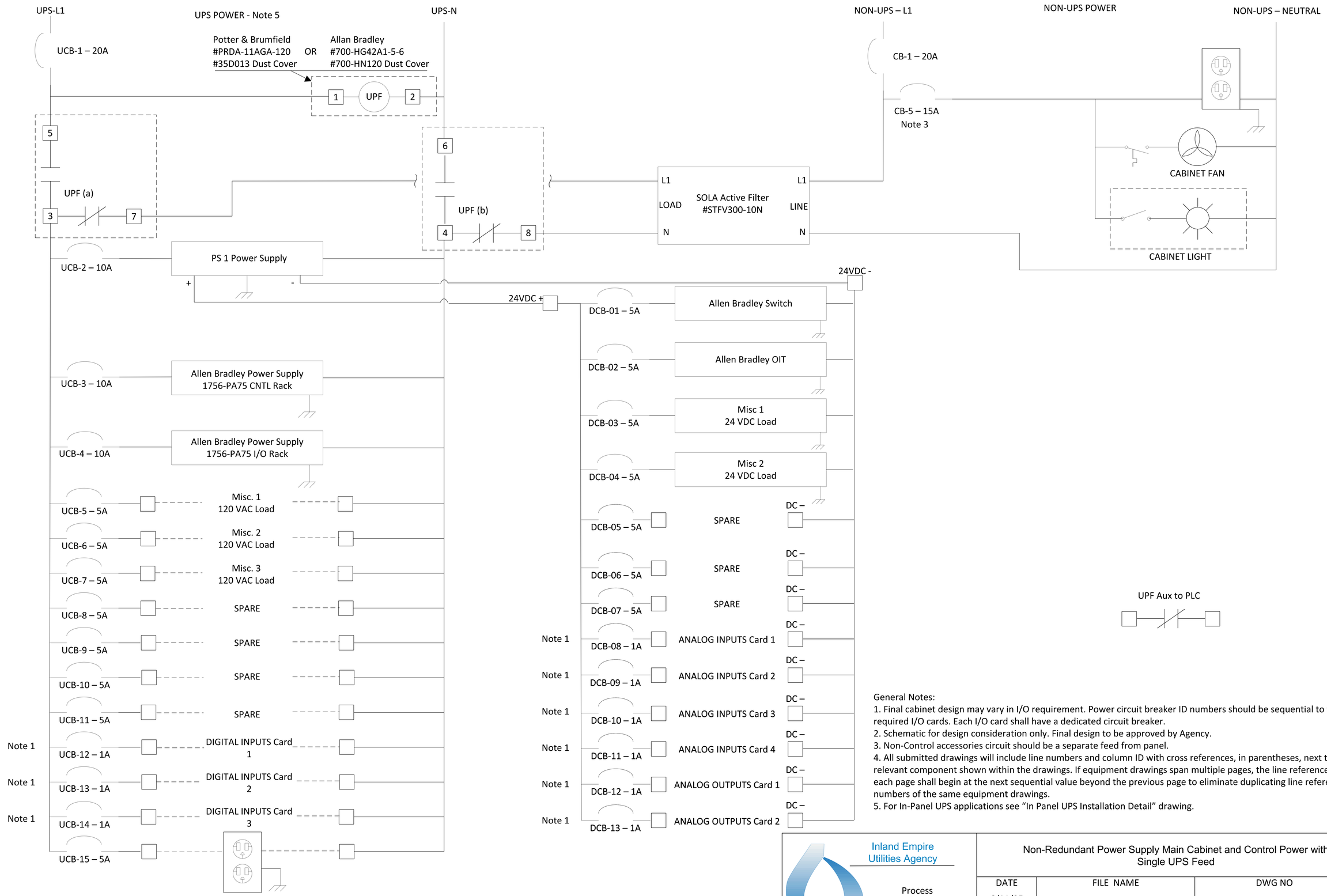

General Notes:

1. Final cabinet design may vary in I/O requirement. Power circuit breaker ID numbers should be sequential to the required I/O cards. Each I/O card shall have a dedicated circuit breaker.
2. Schematic for design consideration only. Final design to be approved by Agency.
3. Non-Control accessories circuit should be a separate feed from panel.
4. All submitted drawings will include line numbers and column ID with cross references, in parentheses, next to each relevant component shown within the drawings. If equipment drawings span multiple pages, the line reference number of each page shall begin at the next sequential value beyond the previous page to eliminate duplicating line reference numbers of the same equipment drawings.
5. For In-Panel UPS applications see “In Panel UPS Installation Detail” drawing.

Inland Empire Utilities Agency

Process Automation and Control

Non-Redundant Power Supply Main Cabinet and Control Power with Single UPS Feed

DATE	FILE NAME	DWG NO	REV
6/11/25			11b

SCALE	1 : 1	DRW BY:	JPT		SHEET	4 OF 7

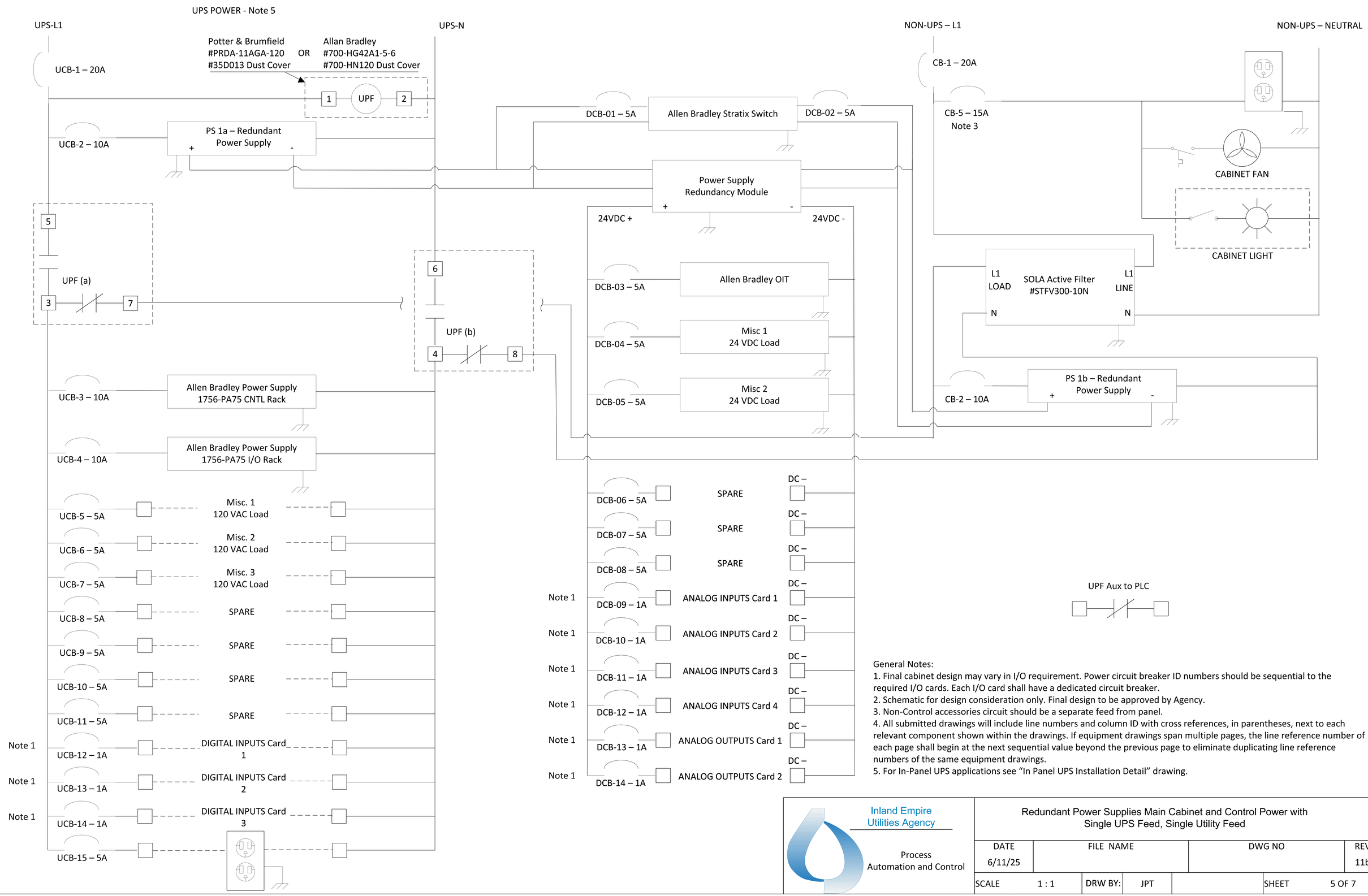

General Notes:

1. Final cabinet design may vary in I/O requirement. Power circuit breaker ID numbers should be sequential to the required I/O cards. Each I/O card shall have a dedicated circuit breaker.
2. Schematic for design consideration only. Final design to be approved by Agency.
3. Non-Control accessories circuit should be a separate feed from panel.
4. All submitted drawings will include line numbers and column ID with cross references, in parentheses, next to each relevant component shown within the drawings. If equipment drawings span multiple pages, the line reference number of each page shall begin at the next sequential value beyond the previous page to eliminate duplicating line reference numbers of the same equipment drawings.
5. For In-Panel UPS applications see “In Panel UPS Installation Detail” drawing.

Inland Empire Utilities Agency

Process Automation and Control

Redundant Power Supplies Main Cabinet and Control Power with Single UPS Feed, Single Utility Feed

DATE	FILE NAME	DWG NO	REV
6/11/25			11b

SCALE	1 : 1	DRW BY:	JPT		SHEET	5 OF 7

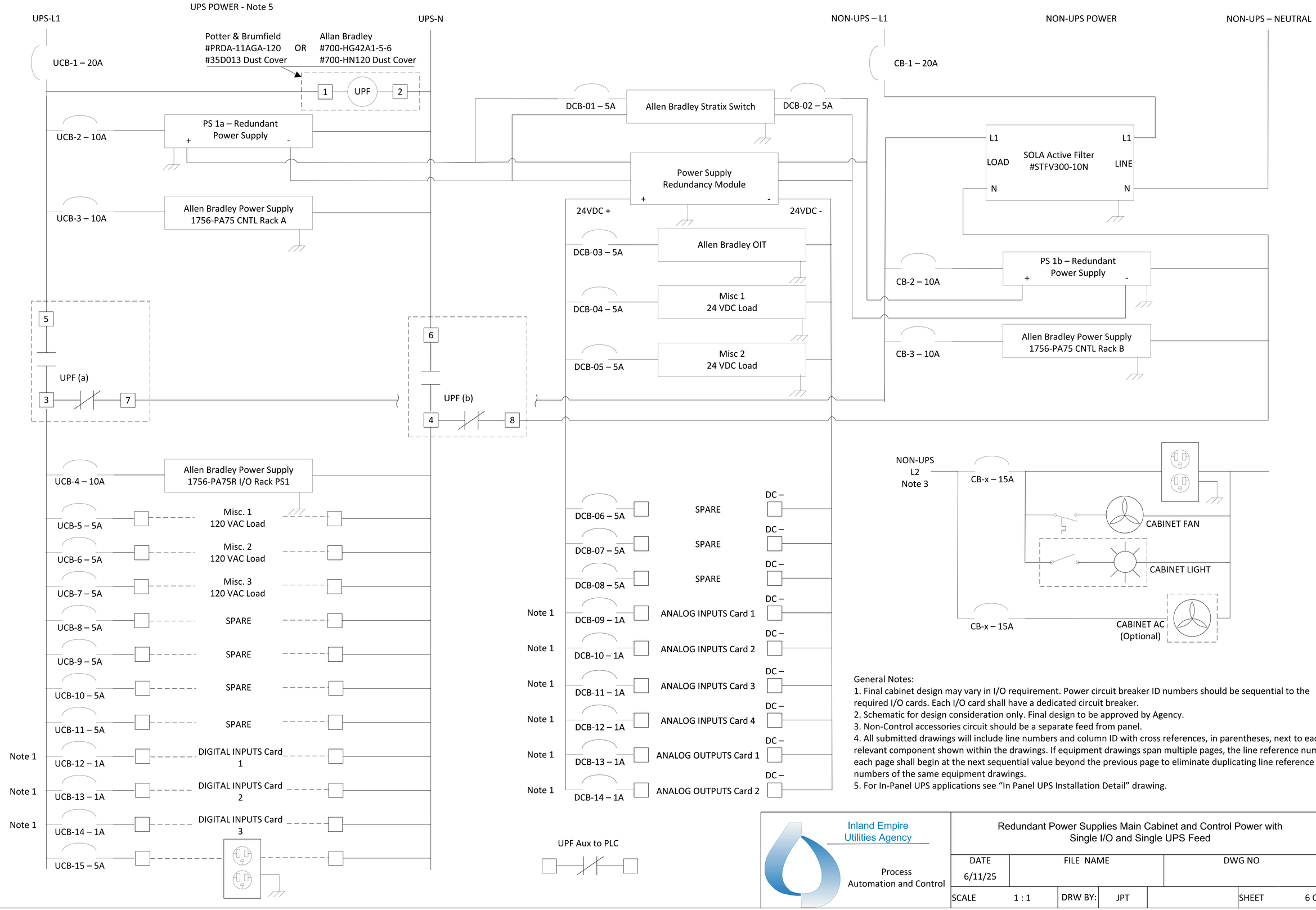

General Notes:

1. Final cabinet design may vary in I/O requirement. Power circuit breaker ID numbers should be sequential to the required I/O cards. Each I/O card shall have a dedicated circuit breaker.
2. Schematic for design consideration only. Final design to be approved by Agency.
3. Non-Control accessories circuit should be a separate feed from panel.
4. All submitted drawings will include line numbers and column ID with cross references, in parentheses, next to each relevant component shown within the drawings. If equipment drawings span multiple pages, the line reference number of each page shall begin at the next sequential value beyond the previous page to eliminate duplicating line reference numbers of the same equipment drawings.
5. For In-Panel UPS applications see “In Panel UPS Installation Detail” drawing.

Inland Empire Utilities Agency

Process Automation and Control

Redundant Power Supplies Main Cabinet and Control Power with Single I/O and Single UPS Feed

DATE	FILE NAME	DWG NO	REV
6/11/25			11b

SCALE	1 : 1	DRW BY:	JPT		SHEET	6 OF 7

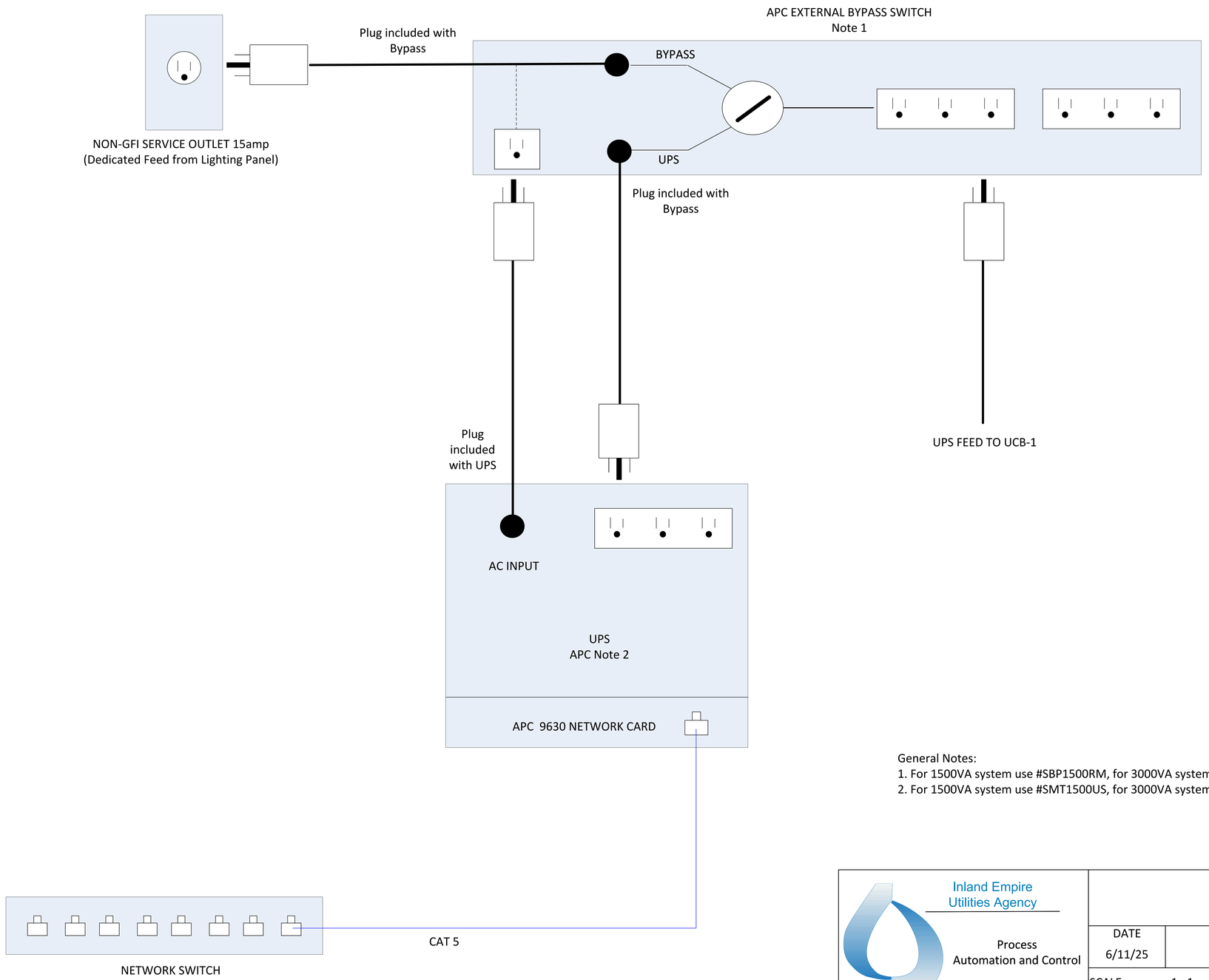

General Notes:
1. For 1500VA system use #SBP1500RM, for 3000VA system use #SBP3000RM.
2. For 1500VA system use #SMT1500US, for 3000VA system use #SMT3000.

Inland Empire
Utilities Agency

Process
Automation and Control

In Panel UPS Installation Detail

DATE	FILE NAME	DWG NO	REV
6/11/25			11b

SCALE	1 : 1	DRW BY:	JPT		SHEET	7 OF 7

S Installation Detail

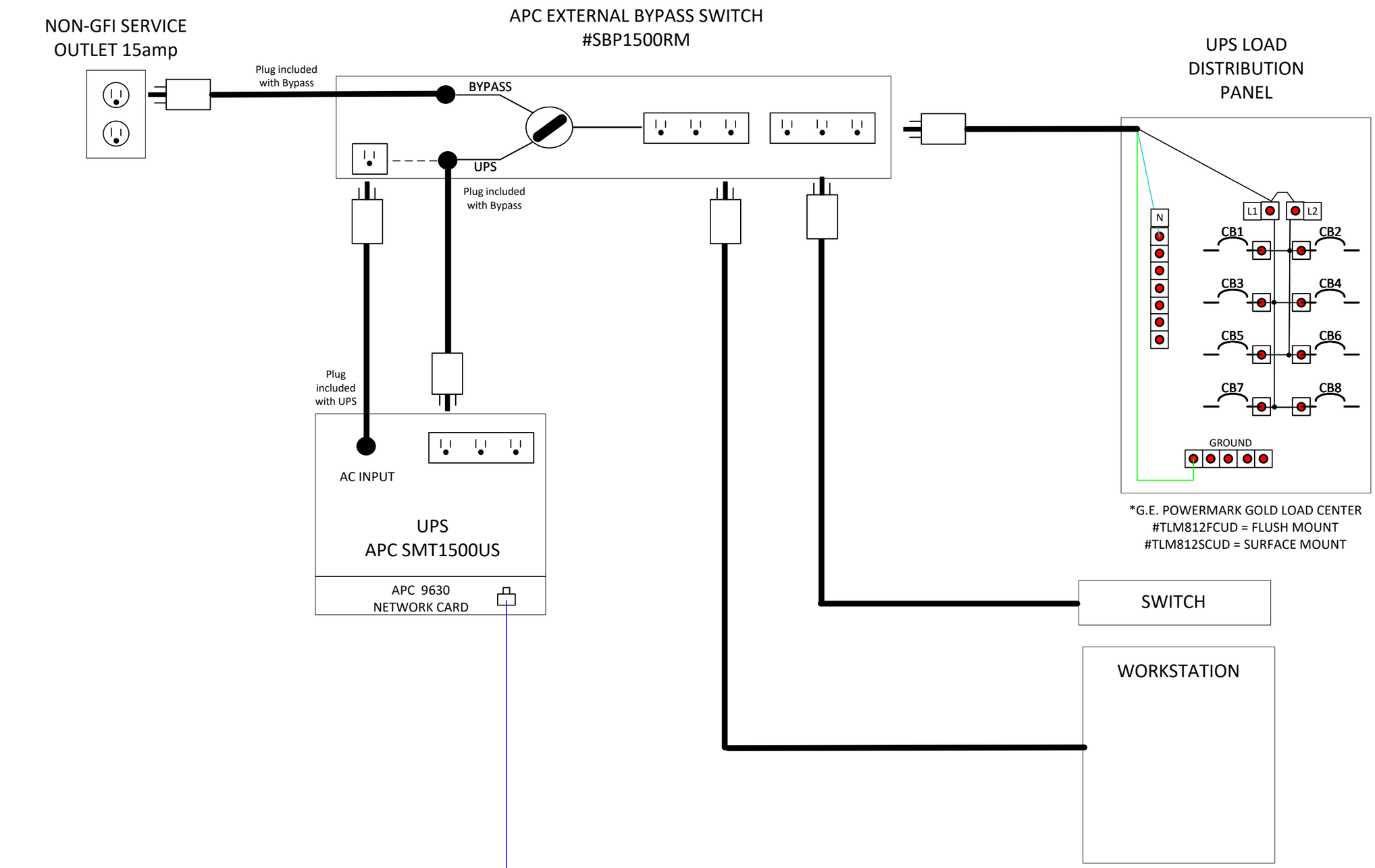

Inland Empire
Utilities Agency
Process
Automation and
Control

Generic 1500 VA UPS Installation Detail

DATE	FILE NAME	DWG NO	REV
7/12/16	FILE:/UPS.VSD	UPSAPC1.5KVA	2.5

SCALE	1 : 1	DRW BY:	SB	DESIGN:	SB	SHEET	1 OF 6

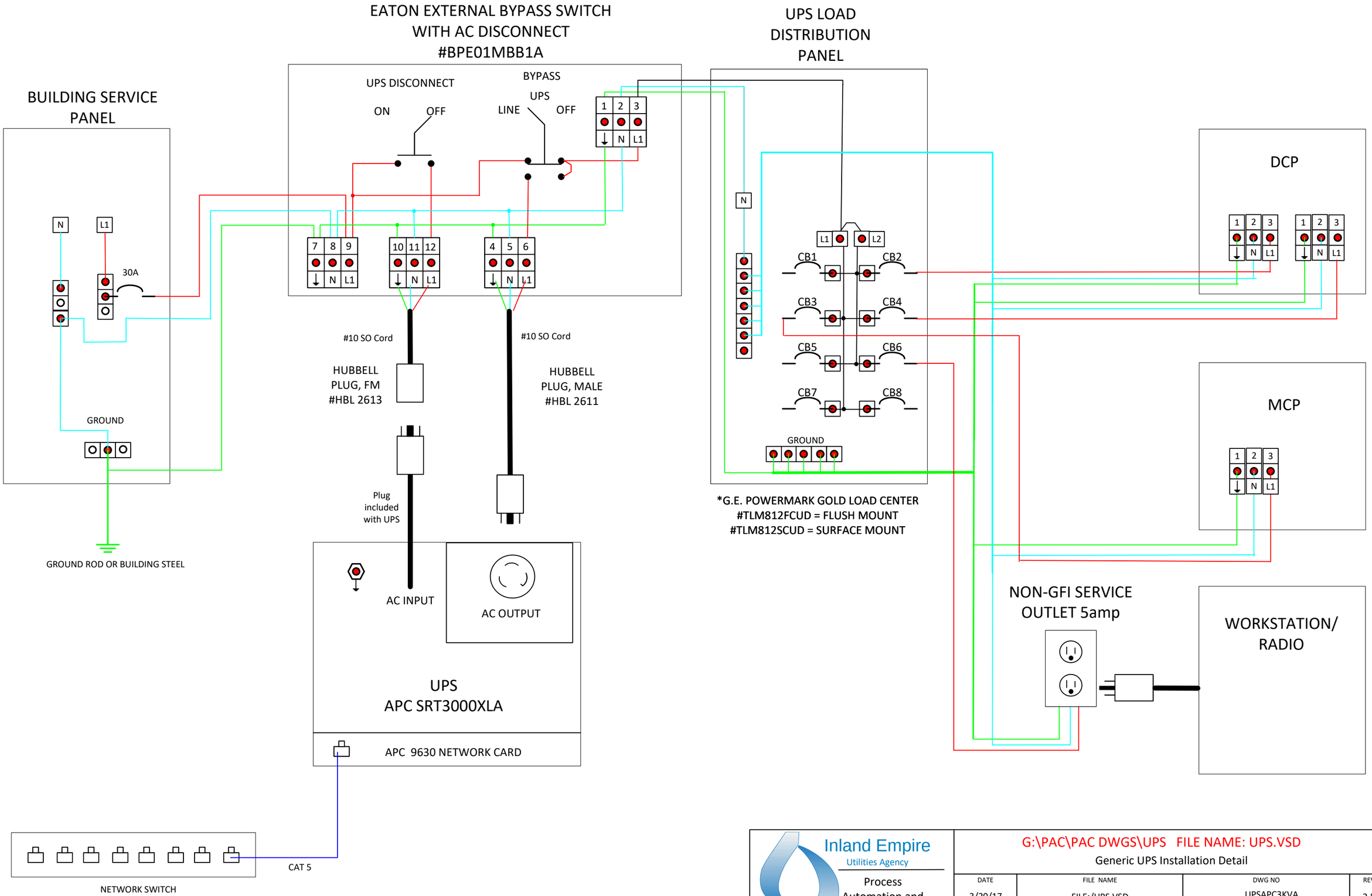

Inland Empire
Utilities Agency
Process
Automation and
Control

G:\PAC\PAC DWGS\UPS FILE NAME: UPS.VSD

Generic UPS Installation Detail

DATE	FILE NAME	DWG NO	REV
3/20/17	FILE:/UPS.VSD	UPSAPC3KVA	2.5

SCALE	DRW BY:	DESIGN:	SHEET
1 : 1	SB	SB	2 OF 6

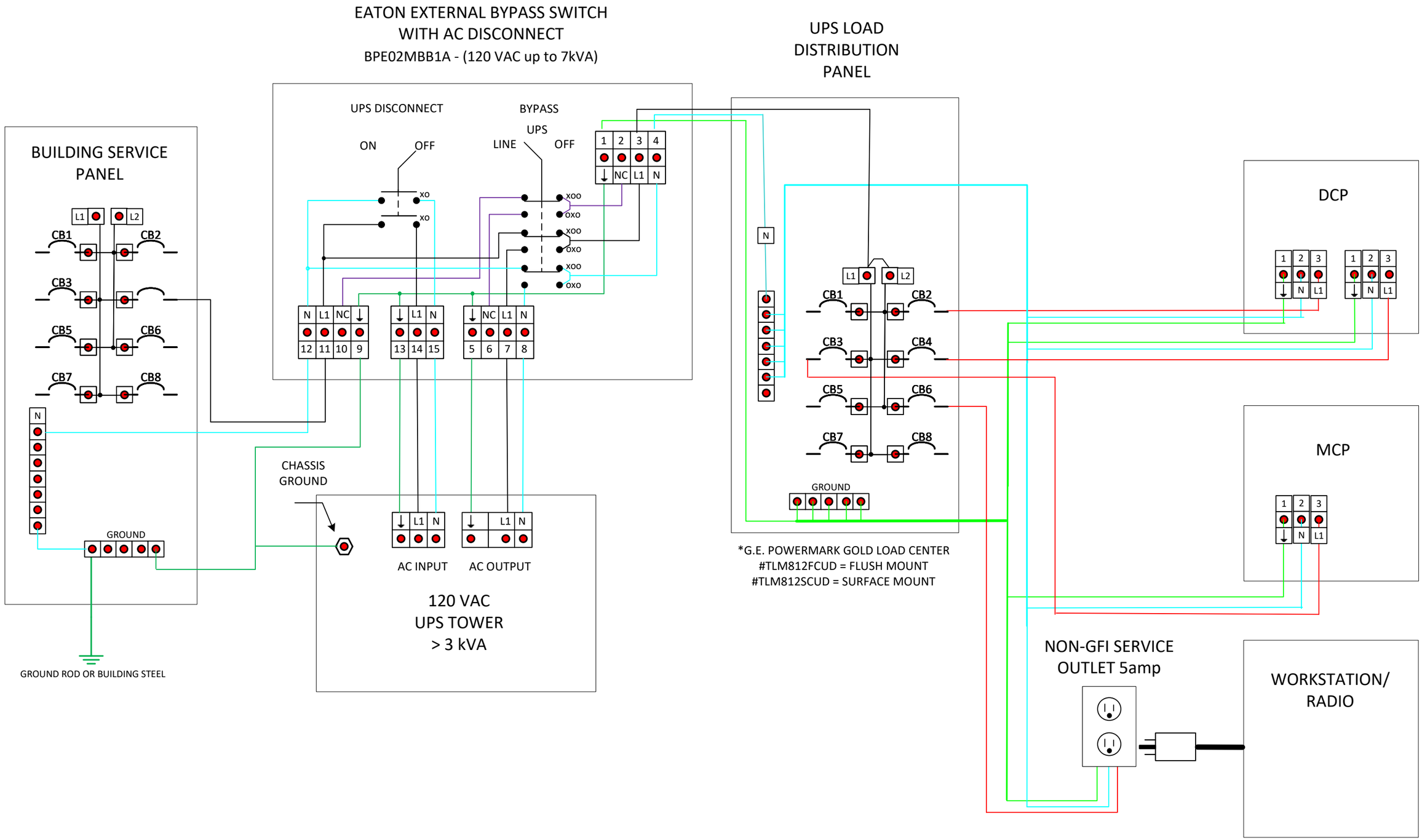

Inland Empire
Utilities Agency
Process
Automation and
Control

UPS Installation Detail

DATE	FILE NAME	DWG NO	REV
5/13/04	FILE:/UPS.VSD	UPS51306	2.0

SCALE	1 : 1	DRW BY:	SB	DESIGN:	SB	SHEET	3 OF 6

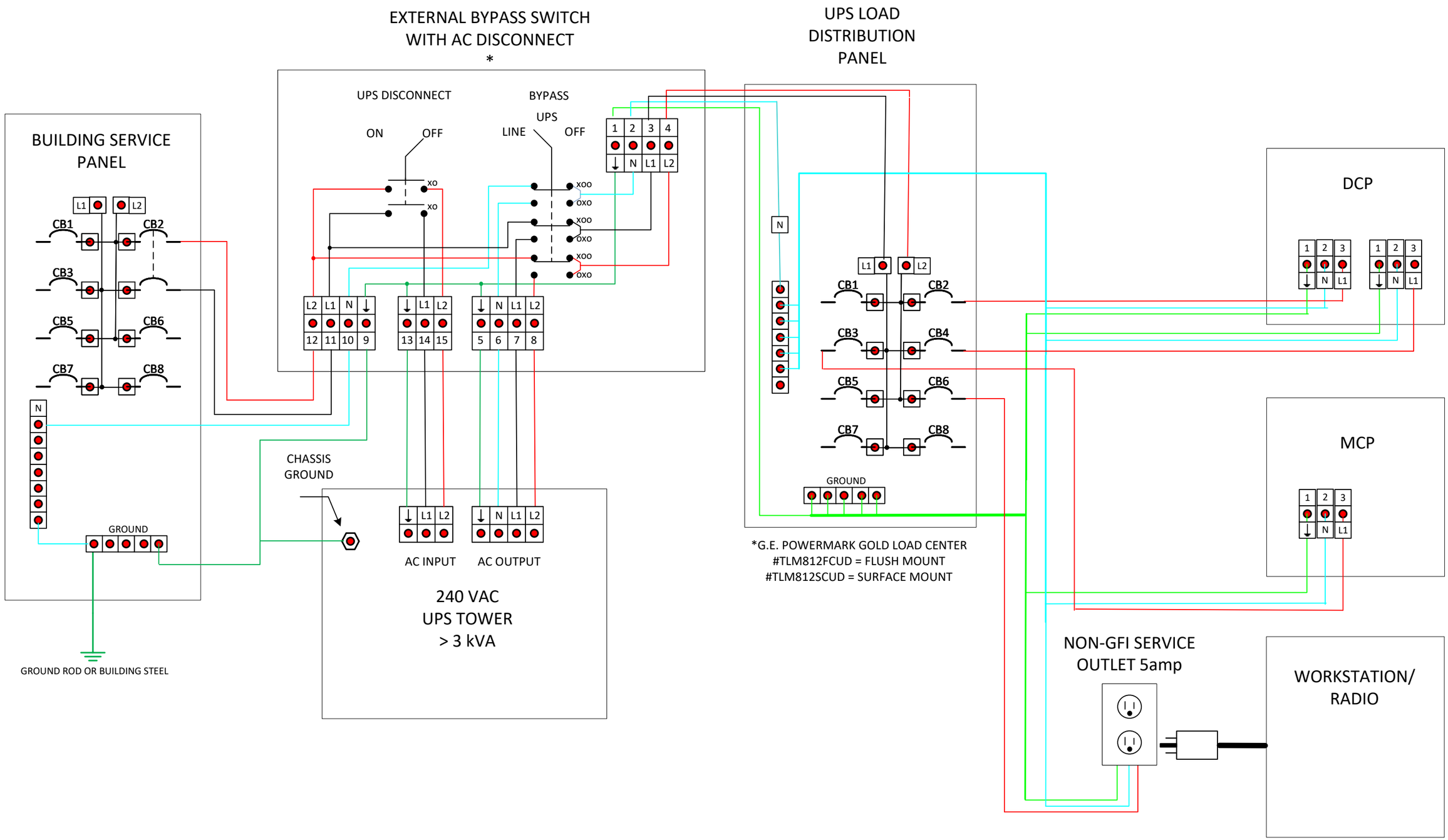

*EATON Bypass Switch
BPE02MBB1A - (240 VAC up to 7kVA)
BPE04MBB1A - (240 VAC up to 12.5 kVA)
BPE05MBB1A - (240 VAC up to 18 kVA)

Inland Empire
Utilities Agency
Process
Automation and
Control

UPS Installation Detail

DATE	FILE NAME	DWG NO	REV
5/13/04	FILE:/UPS.VSD	UPS51306	2.0

SCALE	DRW BY:	DESIGN:	SHEET
1 : 1	SB	SB	4 OF 6

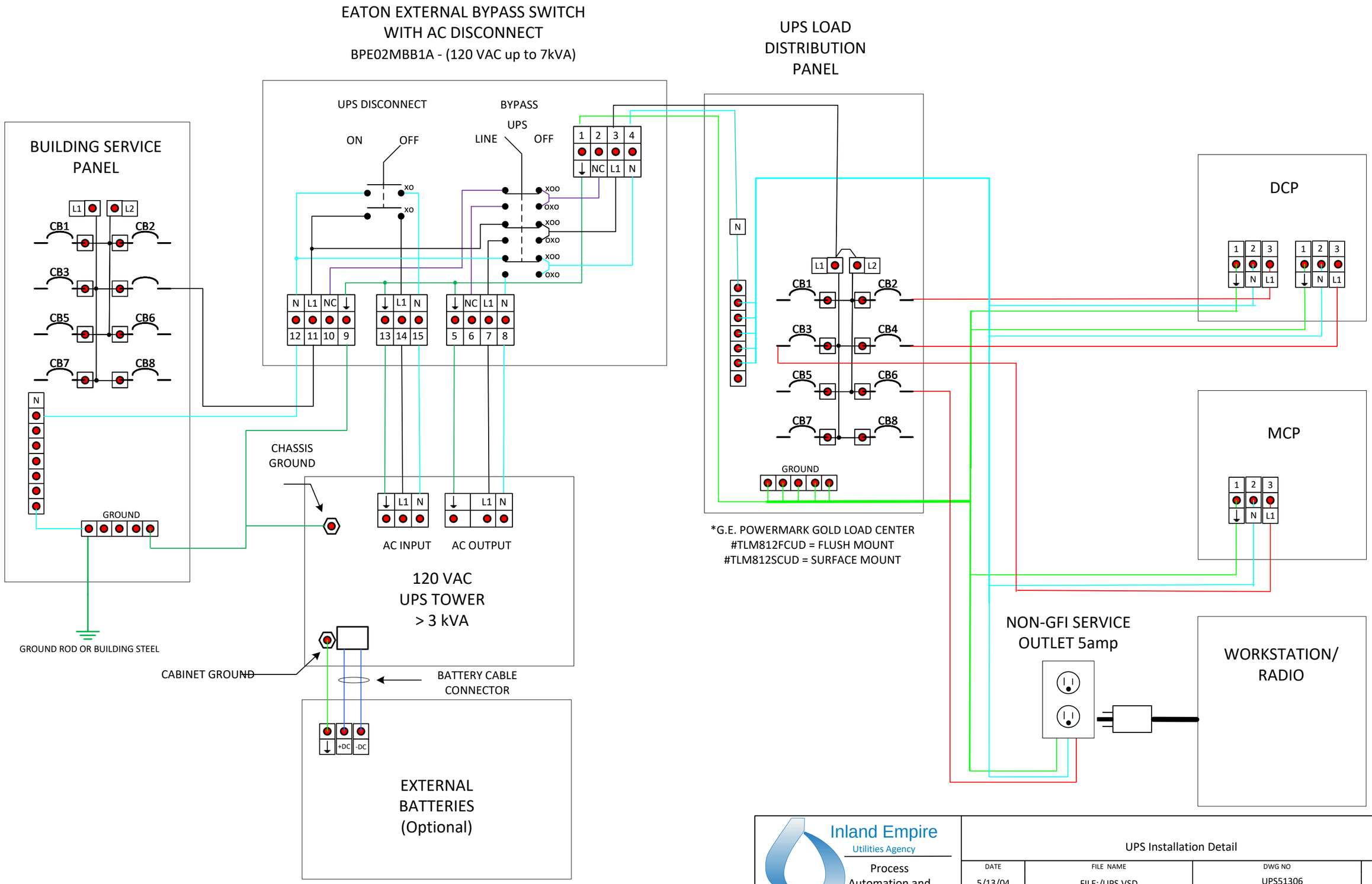

Inland Empire
Utilities Agency
Process
Automation and
Control

UPS Installation Detail

DATE	FILE NAME	DWG NO	REV
5/13/04	FILE:/UPS.VSD	UPS51306	2.0

SCALE	1 : 1	DRW BY:	SB	DESIGN:	SB	SHEET	5 OF 6

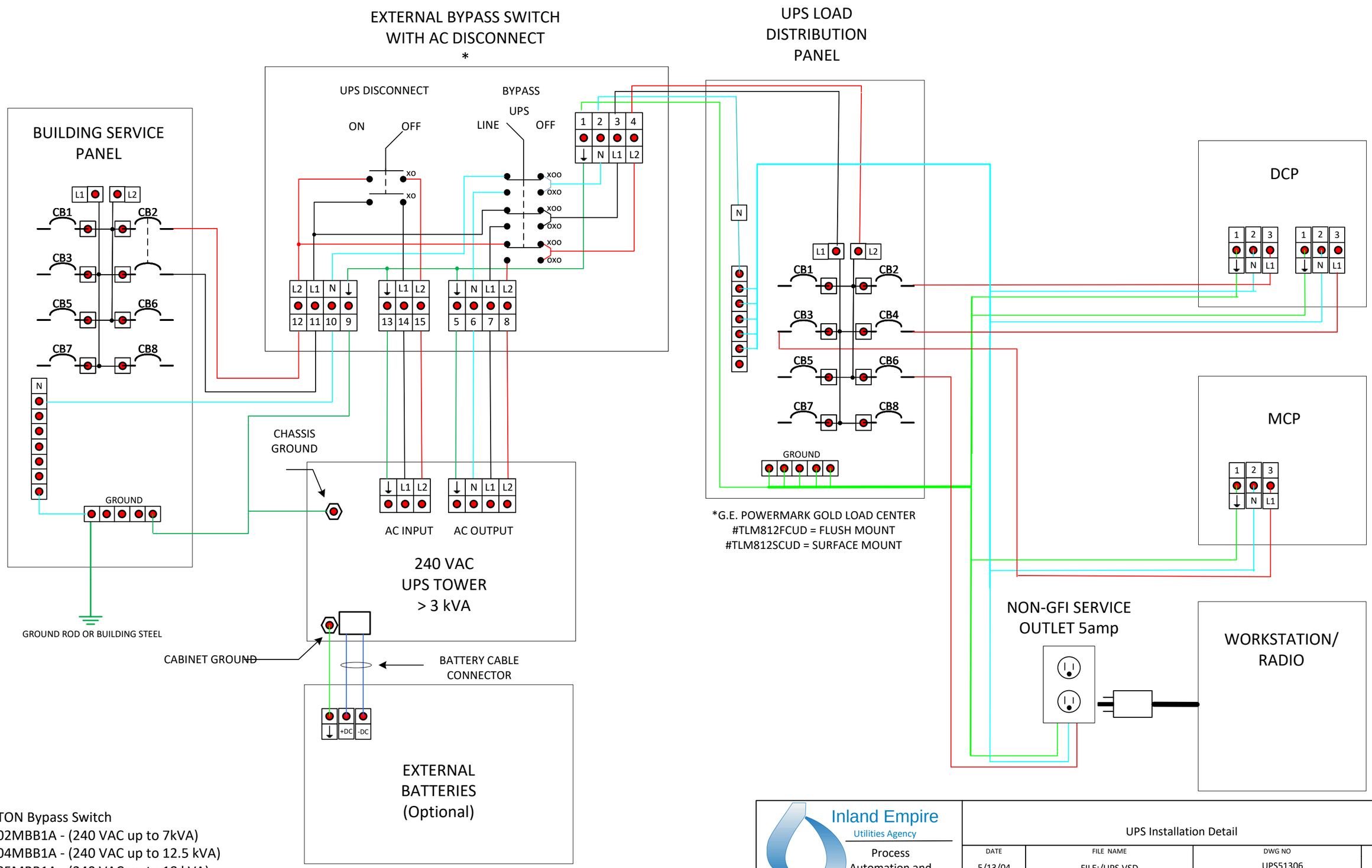
EXTERNAL BYPASS SWITCH
WITH AC DISCONNECT
*
UPS DISCONNECT
ON
OFF
BYPASS
UPS
LINE
OFF
1 2 3 4
N L1 L2
xo
xo
xoo
oxo
xoo
oxo
xoo
oxo
L2 L1 N
12 11 10 9
L1 L2
13 14 15
N L1 L2
5 6 7 8
BUILDING SERVICE
PANEL
L1 L2
CB1
CB2
CB3
CB5
CB6
CB7
CB8
N
GROUND
GROUND ROD OR BUILDING STEEL
CHASSIS
GROUND
L1 L2
AC INPUT
N L1 L2
AC OUTPUT
240 VAC
UPS TOWER
> 3 kVA
CABINET GROUND
BATTERY CABLE
CONNECTOR
+DC -DC
EXTERNAL
BATTERIES
(Optional)
UPS LOAD
DISTRIBUTION
PANEL
N
L1 L2
CB1
CB2
CB3
CB4
CB5
CB6
CB7
CB8
GROUND
*G.E. POWERMARK GOLD LOAD CENTER
#TLM812FCUD = FLUSH MOUNT
#TLM812SCUD = SURFACE MOUNT
DCP
1 2 3
N L1
1 2 3
N L1
MCP
1 2 3
N L1
NON-GFI SERVICE
OUTLET 5amp
WORKSTATION/
RADIO
*EATON Bypass Switch
BPE02MBB1A - (240 VAC up to 7kVA)
BPE04MBB1A - (240 VAC up to 12.5 kVA)
BPE05MBB1A - (240 VAC up to 18 kVA)
Inland Empire
Utilities Agency
Process
Automation and
Control
UPS Installation Detail
DATE 5/13/04
FILE NAME FILE:/UPS.VSD
DWG NO UPS51306
REV 2.0
SCALE 1 : 1
DRW BY: SB
DESIGN: SB
SHEET 6 OF 6

Inland Empire Utilities Agency
A MUNICIPAL WATER DISTRICT

Engineering Design Guidelines

Section 5- Civil/Structural/ Architectural/Hydraulics

AVAD ENGINEERING

Section 5- Civil/Structural/Architectural/ Hydraulics

Inland Empire Utilities Agency
A MUNICIPAL WATER DISTRICT

5.1 Civil

5.1 Civil

LAST UPDATED			June
Item	**Parameter**	**Criteria**	**Notes**
0	Scope	This document applies to Civil Design at the reclamation and treatment plants and collection systems.	
1	Site Layout	Allow for future logical expansion, safety, maintenance, and process flow. Reference Master Plan at PDR.	
2	Preliminary Site Plan	Survey to be referenced to the Plant Coordinate System and to other separate surveys for pipelines, plant sites, and related facilities. Use survey for grading and drainage designs.	
		Perform geotechnical investigations to determine soil design parameters and existing conditions, corrosivity, boulders, cobbles, etc.	
		Provide corrosion control design testing and recommendations in a report.	
		Provide landscape buffer space along public roads for noise abatement and screening of facilities from public view.	
		Incorporate site specific requirements for special conditions.	
		Accommodate visitor, personnel and truck traffic.	
		Provide access to the perimeter of all facilities.	
		Provide ample space for those facilities requiring secondary containment.	
		Include all transformers, substations and water supply facilities.	
		Provide space for emergency generators where required.	
		Identify work area, storage area and allowable site access.	

LAST UPDATED			June
Item	**Parameter**	**Criteria**	**Notes**
3	Facility Arrangement	Maintain separation of operations and administration buildings from process areas.	
		Arrange process components to minimize unusual equipment arrangements.	
		Provide adequate space for piping required between process units for future expansion.	
		Provide space for cranes and maintenance vehicles without impairing normal operation.	
		Valves should be in such a way as to maximize ease of operation	
		Keep the amount of confined spaces to a minimum.	
4	Access Roads	Use minimum width of 24 feet for Two-way traffic.	Include Striping.
		Provide ample space and route for chemical deliveries.	
		Design buildings to be accessible to Fire Department apparatus by roads with a minimum unobstructed width of 20 feet, and vertical clearance of 15 feet. Extend roads to within 150 feet of all building walls and entrances.	
		Discuss road design criteria and layout with local Fire Department.	
		Provide directional and traffic signs and markings for all one-way roads and direct traffic to key buildings.	
		All building accesses to comply with ADA requirements.	
5	Parking Area Design	Parking for employees and visitors to be located near operations and administration buildings.	
		Early during design, confirm the need for truck parking and types of trucks.	

LAST UPDATED			June
Item	**Parameter**	**Criteria**	**Notes**
6	Horizontal and Vertical Control	Establish basis before surveying.	
7	Coordinates	Locate structures with a minimum of two coordinates on the outside face of the wall or on column lines. Show on structural foundation plan.	
		Locate circular structures by a coordinate for the center point and by the radius.	
		Locate centerline of roads with coordinates on points of intersection and with adequate curve information.	
		Provide profiles for roads where control of grade is critical and/or vertical curves are required. Show stations, existing grade, vertical curves, horizontal curves and final grade.	
		Provide coordinates and/or dimensions for grading control points, top or bottom of slope to provide sufficient staking to control contractor's tolerances for grading.	
		Provide coordinates or distances from existing structures for appurtenances to fix their location. Locate coordinates on appurtenance's centerline.	
		Provide coordinates or distances from existing structures for yard fixtures.	
8	Grading	Comply with latest edition of the California Building Code, Appendix J. Any conflict with geotechnical report shall be signed and provided in a written report.	
		Entire site to allow future construction to meet minimum design slopes. Flowlines in landscape areas = 1%; Paved areas = 1%; Concrete gutters = 0.5%.	

LAST UPDATED			June
Item	**Parameter**	**Criteria**	**Notes**
		Minimize use of cross gutters or ribbon gutters.	
		Maximum road grades for heavy truck traffic on a routine basis = 7%; short reaches of 10% to 12% allowed under special circumstances.	
		Where grass is mowed, maximum slope = 5:1 horizontal to vertical.	
		Provide access ramps per ADA requirements.	
		Finished grade around structures, slabs and buildings shall be at least 6-inches below floor or slab elevation.	
		Comply with all state and federal safety codes.	
		Show contours with control points established to provide for intersecting planes on the Plans.	
9	Drainage Systems	Drainage piping shall be at least 6-inch nominal size.	
		Incorporate drainage design during initial design phases.	
		Direct sheet flow and flowlines away from walkways, buildings, cut and fill slopes, and yard activities. Provide culverts where collected drainage must cross walkways.	
		Design inlet structures where it will not hinder facility operation.	
		Provide a design to eliminate soil or debris from entering storm drain system for large areas.	
		Storm drains and catch basin laterals are a minimum of 18-inch diameter. Inlet openings are a minimum 2 feet in length.	

LAST UPDATED			June
Item	**Parameter**	**Criteria**	**Notes**
		Daylight storm drains to ditches or connect to an off-site drain system. Avoid on-site detention basins where soils are poor. Do not retain storm water more than a few days.	
		Design to be maintenance free, if possible.	
		Calculate drainage runoff using a minimum of a 25-year storm. For storm calculations, use 24-hour duration. For conveyance, use 6-hour intensity. Where intense rainfall could result in runoff leaving property, use 2-hour intensity.	
		Use rainfall intensity/frequency graphs from the County of San Bernardino.	
10	Yard Piping	Design sanitary sewer, interceptors, mains, and interplant mains of a material that is resistant to hydrogen sulfide corrosion. Apply PVC liner or appropriate coating plate linings to structures.	Use CPVC, if exposed to sunlight.
		Design steel pipe in accordance with American Water Works Association Manual M11.	
		Design ductile iron pipe in accordance with Chapter 7, Sewers, Siphons and Force Mains.	
		For pressure distribution pipes, use restrained joints. For non-restrained joints, use harness assemblies across joints. Must withstand the maximum pressure anticipated for the system.	
		Design to have access for maintenance and inspection and have manholes to grade. Provide flanged or restrained/screwed end plug cleanouts for all building drains and sewers and all force mains.	

LAST UPDATED			June
Item	**Parameter**	**Criteria**	**Notes**
		Try not to bury valves. Locate all valves in tunnels or buildings or construct vaults around necessary yard valves.	
		Gravity pipelines to be a minimum 6-inch in diameter and have manhole to grade. Locate manholes at all changes in direction. Maximum distance = 300 feet between manholes.	
		Design smaller pressure lines with pressure cleanouts at grade.	
		Provide air and vacuum relief valves at high points on pressure pipes. Provide drains or blowoffs at low points.	
		Lay piping in corridors and provide space for future piping as well as access for pipe repairs.	
		Provide pipe capacity calculations in conjunction with the plant hydraulic profile.	
		Design all pipe for positive embankment conditions. 95% max dry density compaction of pipe zone bedding and backfill.	
		Combine the drain system for return to the treatment system.	
		Minimize abandoned unused piping, removing as much existing piping as possible. If left in place, fill abandoned pipe with grout plug and seal ends.	
11	Piping at Structures	Encase piping in concrete whenever under a structure and to a distance structure determined by a 45° angle from the outside of the footing to the pipe.	

LAST UPDATED			June
Item	**Parameter**	**Criteria**	**Notes**
		Outside structure or encasement, provide flexible joints on pipes. Where pressure lines are involved, include flexible joints with a mechanical restraint. Where gravity lines are involved, flexible joints may be normal push-on joints. Use the first flexible joint 2 feet from the structure. Use two (2) two-foot long joints at a junction with a structure.	
12	Water Piping	Design as a loop. Provide three (3) isolation valves at all tee fittings (one on each tee outlet).	
		Minimum horizontal separation requirements for the parallel construction of potable water pipelines: • 10-feet: Sewer, Secondary Treated Recycled Water and hazardous fluids • 4-feet: Disinfected Tertiary Recycled Water and Storm Drainage.	Maintain 1-foot vertical separation also.
		Crossings shall be constructed no less than 45-degrees and no joints are allowed within 8-feet horizontal distance.	
		Whenever a pipeline crossing must occur where required clearances cannot be met, special construction that minimizes the potential for contamination will be required as specified by CDPH.	
		Provide an air-gap for potable water supply to the site. Where potable water is used for landscape irrigation or process usage, provide a reduced pressure principle backflow assembly system, complete with test cock and isolation valves.	

LAST UPDATED			June
Item	**Parameter**	**Criteria**	**Notes**
		Develop galvanic protection plan for pipelines placed directly in soil. Plan shall explain system used, detailing type, required maintenance, and construction requirements.	
		Contractor shall CCTV RW lines following completion of construction	
13	Fire Protection	Comply with National Fire Protection Association and local fire codes.	
		Provided by a potable water supply.	
		Form a piping loop around the plant perimeter.	
		Submit fire hydrant spacing for review by local fire departments.	
		Place fire hydrants near cross streets and roads with fire truck access and where they are readily visible.	
		Provide break-off check valves for fire hydrants that are vulnerable to vehicular damage.	
14	Security	Security fencing to be 8 foot high chain link fence, with 3 strands of barbed wire slanting outward around property line.	
		Construct posts per APWA-AGC Standard Plan 600-0. Design fabric and posts to PVC-coated galvanized fabric and Class 1A steel per standard specification for public works construction 206-6 and Districts Master Specification.	
		Identify all security requirements for the proposed project including fencing, access, lighting, CCTV, and alarms.	
		Utilize the non-jump type to prevent vandalism.	

LAST UPDATED			June
Item	**Parameter**	**Criteria**	**Notes**
15	Paving	Use latest Green Book requirements. Comply with California Department of Transportation Highway Design Manual Chapter 600.	
		Determine R value for subgrade soils under pavement using a State of California Registered Geo-technical Engineer.	
		Design access roads with a maximum traffic index of 7.0. For parking areas use AR-8000 asphalt.	
		Concrete pavement may be used in lieu of asphalt pavement. Use concrete paving where truck parking is anticipated and where asphalt paving is incompatible with the materials handling requirements for the area.	
		Construct pedestrian walkways between structures and buildings of concrete with a minimum width of 4 feet and minimum thickness of 4 inches.	
16	Spill Prevention, Control and Countermeasure Plan	Identify all manholes on main lines and drains on laterals that may overflow.	
		Identify all storm drains that may be vulnerable to an overflow.	
		Identify all potential emergency diversions that may be made to prevent an overflow.	
		Identify storm drains that may be suitable for containment of an overflow, where the storm drain may be plugged in time to prevent discharge to surface waters.	
		Specify which storm drains should be covered with mat and sandbags and which should be used for containment if necessary.	

LAST UPDATED			June
Item	**Parameter**	**Criteria**	**Notes**
		Specify all equipment at hand during all bypass operations.	
		Specify when emergency bypass equipment shall be ready.	
		Specify training of contractor staff in District procedures and IEUA specified procedures.	
		Include in Contract Documents the spill response plan and required configurations. Indicate on drawings the installed locations of storm sewer mats, sandbags and pipe plugs for containment.	
17	Manhole Covers in Streets	Use Traffic Rated (H-20) manhole covers.	
	Hatches/Manholes covers	Always try to use a circular section. If rectangular is the only configuration, use double hatch (Belco)	Use IEUA Standard MH Details.
	Guard Posts	Always add around equipment if there is any chance of traffic exposure.	

Inland Empire Utilities Agency
A MUNICIPAL WATER DISTRICT

5.2 Structural

5.2 Structural

		LAST UPDATED March 31, 2024	
Item	**Parameter**	**Criteria**	**Notes**
0	Scope	This document applies to Structural Design.	
1	General Code Requirements	Comply with the latest editions of the CBC, ACI, AISC, ASCE, AWS, AWWA, AASHTO and CMAA. Detailed code requirements shall be per the latest edition of the following codes: • General Design: per CBC Chapter 16 and ASCE 7 • Concrete: per CBC Chapter 19, ACI 318, ACI 350, and ACI 350.3 • Masonry: per CBC Chapter 21, and ACI 530/ASCE 5/TMS 402 • Steel: per CBC Chapter 22 and AISC 360, AISC 341, AISC 358 • Wood: per CBC Chapter 23 and NDS-2015	
2	Geotechnical Investigations	Required prior to structural design.	
		Establish location of water table and identify types of soil layers.	
		For structures located below grade and foundations supported by piles, soil-structure interaction analysis under seismic loading may need to be performed, unless it can be demonstrated by other methods that the structure is not subject to damage that renders the essential facilities inoperable after an earthquake.	
		Geotechnical Baseline Report (GBR) may be warranted for some critical structures.	
3	Dead Loads	An allowance for routed mechanical, piping, heating, ventilating and air conditioning (HVAC) and electrical equipment of 20 pounds per square foot will be included.	
4	Live Loads	Design floor area for the loads from specific equipment used or the 125 psf uniform load and 2,000 concentrated load minimums whichever is greater.	

LAST UPDATED March 31, 2024			
Item	**Parameter**	**Criteria**	**Notes**
		Design process equipment and pump rooms for minimum live load of 200 psf or maximum fork lift wheel loads, whichever is higher.	
		Electrical and control rooms shall be designed minimum live load of 300 psf.	
		Do not use CBC live load reduction.	
		Use AASHTO HS 20-44 loading where access is provided for trucks.	
5	Wind Loads	Basic Wind Speed (3 second Gust) = 110 mph (with consideration for special wind regions).	
		Exposure Category = "C" (for Plant No. 1); "D" (for Plant No. 2).	
		Risk Category shall be per CBC Table 1604.5.	
6	Seismic Loads	All structures shall be designed according to the ASCE and CBC.	
		Analysis and modeling criteria for seismic design of buildings shall be in accordance with ASCE 7-10 Section 12.6.	
7	Lateral Earth and Liquid Loads	Consider all operating conditions within design criteria.	
8	Earth Pressure Loads - Below Grade Structures	Design for active soil pressure for all yielding walls.	
		Design for at-rest soil pressure for all non-yielding walls.	
		Surcharge soil pressure including AASHTO vehicle wheel loads if applicable (minimum surcharge equal to an additional 2 feet of soil).	
		Design for passive soil pressure.	
		Design for soil dynamic loads due to earthquake.	
9	Crane & Monorail Loads	Select design loads based on the heaviest item to be removed, with a safety factor. Use safety factor of at least one third, and higher if weights are not all available.	

LAST UPDATED March 31, 2024			
Item	**Parameter**	**Criteria**	**Notes**
		Design of crane girder, monorail beam and beam hangers and supports in accordance with CMAA.	
		Allow for future addition of cranes in areas of heavy equipment in structural design.	
		Impact and lateral loads shall be in accordance with CBC. Vertical deflection shall not exceed L/800 and horizontal deflection shall not exceed L/400.	
10	Crane Girders	Use adjustable bolted connections for fastening crane rail to girder. Welded connections are not permitted.	
		Continuous crane girders are not permitted. Simply supported crane girders shall have end connections capable of rotation under vertical loads.	
11	Thermal Loads	Consider in the design. Such forces will include, but not limited to those caused by piping expansion or contraction.	
12	Erection Loads	Consider in the design.	
13	Load Combinations, Drift and Deflection Limitations	In accordance with ASCE and CBC.	
14	Uplift Loads	Design structures for a minimum factor of safety against uplift and sliding of 1.25 when the structure is empty and there are maximum ground water levels.	
		Uplift forces with empty structure and maximum ground water levels shall be one of the load cases evaluated for designing the structure's base slab.	
15	Seismic Upgrade to Existing Structure	Eliminate missing links in lateral force resisting systems, correct gross deficiencies in seismic systems and strengthen non-ductile "weak links" in such systems.	
		Consistently upgrade entire structure for code prescribed requirements.	

LAST UPDATED March 31, 2024			
Item	**Parameter**	**Criteria**	**Notes**
		Weigh the exact performance required and the cost of various levels of retrofit for specific structures on a case-by-case basis.	
		When criteria for strengthening existing essential and other structures and elements for which such relaxation is proposed is to be presented together with a description of the justification.	
16	Materials - Steel and Miscellaneous	Structural Steel: ASTM A36.	
		Structural Shapes (W Shapes): ASTM A992.	
		Structural Steel Pipe: A53, Type E or S, Grade B.	
		Structural Tubing: ASTM A500, Grade B.	
		Carbon Steel Bolts (for minor structural connections not exposed to corrosive environment): ASTM A307.	
		Connection Bolts (subject to vibration, cyclic, or fatigue loading): ASTM A325 SC, galvanized per ASTM B695.	
		Connection Bolts (not subject to vibration, cyclic, or fatigue loading): ASTM A325 N, galvanized per ASTM B695.	
		Anchor Bolts, studs, inserts, and fasteners (exposed to water, groundwater, sewage, sewer gas, or areas above sewage) sleeved and unsleeved: Type 316 stainless steel.	
		Anchor Bolts, studs, inserts, and fasteners (not exposed to water, groundwater, sewage, sewer gas, or areas above sewage) sleeved and unsleeved: ASTM F1554, galvanized per ASTM B695.	
		Concrete anchors and adhesive capsule anchors: Type 316 stainless steel.	
		Anchor bolts and concrete anchors (in contact with aluminum): Type 304 or 316 stainless steel.	

LAST UPDATED March 31, 2024			
Item	**Parameter**	**Criteria**	**Notes**
		Welding Electrodes: E70XX Low hydrogen type or as approved.	
		Perform all welding to approved and certified AWS procedures.	
17	Materials - Concrete	Cement: ASTM C150 Type II or Type V.	
		Reinforcement: ASTM A615 Grade 60.	
		Cast in place concrete: 4000-psi minimum, 28 day compressive strength.	
		Lean concrete for mud mats: 2500-psi minimum, 28 day compressive strength.	
		Concrete for duct banks: 2500-psi minimum, 28 day compressive strength.	
		Design the expansion, contraction, and construction joints to adequately tolerate differential movements due to settlement, temperature, and shrinkage effects.	
		Provide all types of joints in structures with waterstop and UV resistant system where water tightness is required.	
18	Materials - Aluminum	All aluminum: 6061-T6 and ASTM B221 and ASTM B308.	
		Bolts and components (connecting aluminum): Type 304 or 316 stainless steel.	
		Aluminum guardrails and handrails (rails, posts, and fitting-assembly spacers): 6063 or T6 extruded aluminum pipe of 1-1/2-inch outer diameter and 0.145 inch wall thickness.	
		Aluminum guardrails and handrails (other parts not listed above): 6063 extruded aluminum or 214-F aluminum casting.	
		Aluminum ladders: 6063-T6 or 6061-T6.	
		Design the finished diameter of holes for unfinished bolts to be not more than 1/16 inch larger than the nominal bolt diameter.	
		Perform all welding to approved and certified AWS procedures.	

LAST UPDATED March 31, 2024			
Item	**Parameter**	**Criteria**	**Notes**
19	Materials - Masonry	Concrete block; concrete masonry unit: Standard medium weight, (unless specified to use lightweight: maximum 105 pcf), ASTM C90, Grade NI.	
		Brick: ASTM C62, Grade MW.	
		Mortar minimum compressive strength: 1,800 psi ASTM C270 Type S.	
		Cement: ASTM C150, Type II.	
		Grout minimum compressive strength: 2,000 psi ASTM C476	
		Reinforcement Yield Strength: 60,000 psi ASTM A615.	
		CMU is not acceptable for below grade facilities and structures.	
20	Facilities	Essential facilities are those which are required to maintain the flow of wastewater through the plants.	
21	Water Holding Structures	Do not back fill until the basin passes a leak test. During leak testing, the liquid level in the tank shall be at maximum operating levels.	
22	Protection of Concrete in Corrosive Areas	Use imbedded HDPE liner for protection of new cast in place concrete in corrosive areas such as preliminary treatment, headworks, primary clarifiers, digesters, etc. The HDPE liner shall be by AGRU Sure-Grip as manufactured by Agru America, or equal.	
23	Concrete Structure Finish	Concrete structure finish requirements shall include “sack and patch” on of all exposed and submerged structures.	

LAST UPDATED March 31, 2024			
Item	**Parameter**	**Criteria**	**Notes**
24	Crack Control	In accordance with ACI 350, shall apply to all water holding structures.	
		Buildings with high humidity.	
		All structures exposed to repeated wash down or chemical or process spills.	
		All structures below groundwater.	
		All structures built in or placed in the water.	
		Structures below grade and above groundwater where dry interior is critical, including: basements pump stations, electrical vaults and valve houses.	
		Z factor shall be less than 95 kps per inch for service load cases for all structures exposed to raw wastewater, primary or secondary flows and sludge. In all other cases Z shall not exceed 115 kips per inch.	
25	Concrete Repair and Replacement	Inspection/assessment procedures and repair and/or replacement recommendations shall be in accordance with American Concrete Institute Standards.	
26	Foundations	Where conflict exists between Geotechnical reports and information, the most stringent requirement shall govern.	
		Explore alternatives to traditional pile driving for foundation designs.	
		Evaluate designs based on the nature of the soils and geological substrate and the proximity to sensitive noise receptors including human activities and sensitive wildlife species.	
		Alternatives include avoiding the need for piles, use of cast-in-place piling constructed in bored holes and low noise type pile drivers and extractors.	
		If pile driving is recommended, an acoustic engineer shall evaluate mitigation measures.	

LAST UPDATED March 31, 2024			
Item	**Parameter**	**Criteria**	**Notes**
27	Vibrating Equipment	The ratio of the natural frequency of the structure to the exciting frequency of the equipment shall be greater than 1.5.	
28	Equipment Anchorage	Anchor all equipment, tanks, piping, etc. in accordance with CBC requirements to resist wind or seismic loads.	
		Anchorage of equipment, piping etc. that is submerged in water or waste water shall be designed for seismic induced water sloshed loads in addition to the other loadings.	
29	Floor Drainage	Ensure the drainage plan does not prevent proper pipe or conduit routing, and does not result in impractical footing requirements.	
		Where practical, the floors of electrical rooms shall be sloped 1/4-inch per foot or more to flush door sills.	
		Other rooms that have smoothly coated floors and are not subject to washdown shall be sloped at least 1/4-inch per foot to floor drains.	
		Except for floors in office spaces, all other room floors shall be sloped at 3/8-inch per foot or more to floor drains.	
		The provision of a side slope to a drainage trench along the side of a room can allow more aggressive slopes and is sometimes preferred. Drainage trenches may be sloped with at least 1/4-inch per foot slope. Trenches should be 12 inches wide.	
30	Potential Loads from Solar Panels and other power generation equipment	Include loads from potential future solar panels for relevant structures as well as loads from any other power generation equipment.	

Inland Empire Utilities Agency
A MUNICIPAL WATER DISTRICT

5.3 Architectural

5.3 Architectural

		Last Updated	Sep 1, 2025
Item	**Parameter**	**Criteria**	**Notes**
0	Scope	This document applies to Architectural Design.	
1	Building Insulation	Comply with fire-resistance and flammability ratings.	
		Comply with code interpretations by governing authorities.	
2	Sound Attenuation Mineral Fiber Blanket Insulation	Provide insulations formed from inorganic mineral fibers complying with ASTM C 665 and ASTM C 764.	
3	Sound Attenuation Fire Blanket Insulation	Provide insulation containing non-asbestos, non-combustible compounds of spun mineral fiber felt formed into flexible and resilient blankets:	
		1) Thermal Conductivity (k), ASTM C 518: 0.27 Btu/in./hr/sf/degrees F.	
		2) Density, Manufacturer's Certified Test: 2.5 pcf.	
		3) Flame Spread, ASTM E 84: 25 maximum.	
		4) Smoke Developed, ASTM E 84: 50 maximum.	
		5) Fuel Contributed, ASTM E 84: 50 maximum.	
		Thickness: 3-inches.	
		Width: 16-inches.	
		Thermafiber SAFB by USG Interiors, or equal.	
4	Fire Safing Insulation	Semi-rigid non-asbestos compounds of spun mineral fiber felt, meeting FS HH-I-521F, Type I, Class A and FS HH-I-558B, Form A, Classes 1 and 2. Nominal density of 4 pounds per cubic foot and a thermal conductivity (k) of 0.24:	
		a. Flame Spread Rating, ASTM E 84: 15 maximum.	
		b. Fuel Contributed, ASTM E 84: 1 maximum.	
		c. Smoke Development, ASTM E 84: 0 maximum.	
		d. Fire Resistance Rating, ASTM E 119: 3 hours minimum.	

		Last Updated	Sep 1, 2025
Item	**Parameter**	**Criteria**	**Notes**
		Thermafiber Fire-Safing Insulation by USG Interiors, or equal.	
5	Rigid Interior Wall Insulation	Provide insulations formed from extruded polystyrene foam, tight closed cell structure with no voids between the cells, high compressive strength, resistance to water penetration, and formed into rigid sheet complying with ASTM D 2842, ASTM C 518, ASTM C 177, and ASTM C 578, Type X: 1) Thermal Resistance Aged R-Valve per inch at 75 degrees F mean temp, ASTM C 518: 5.0. 2) Compressive Strength (lb/in) min., ASTM D 1621: 15. 3) Flexural Strength (lb/in) min., ASTM C 203: 40. 4) Water Absorption (% by volume) max., ASTM C 272: 0.1. 5) Water Vapor Permeance (perm), ASTM E 96: 1.1. 6) Flame Spread, ASTM E 84: 5. 7) Smoke Developed, ASTM E 84: 165.	
		Thickness: 1-1/2 inches.	
		Width: 23-7/8 inches.	
		Styrofoam Z-mate Interior Rigid Wall Insulation by Dow Chemical, or equal.	
6	Roof Insulation	Rigid foam insulation, ANSI/ASTM C-1289 Type II, polyiscocyanurate board with fiberous glass facer: a. Compressive Strength: 20 psi, nominal b. Board Density: 2.0 lbs. Per cubic foot, nominal c. Thickness and R-value: 2-inch, R 12.0 d. Provide minimum slope to drain of 1/4-inch per foot. e. Provide Pre-cut factory-formed corners, crickets, tapered edge strips, hipsand valleys.	
		ISO Insulation System by: GAF EverGuard Roofing Systems, or equal.	

		Last Updated	Sep 1, 2025
Item	**Parameter**	**Criteria**	**Notes**
7	Adhesive For Bonding Insulation	The type recommended by the insulation manufacturer, and complying with fire-resistance requirements.	
8	Mechanical Anchors	Type and size shown or, if not shown, as recommended by the insulation manufacturer for the type of application shown and condition of substrate.	
9	Impaling Clips	Provide galvanized steel impaling clips complying with requirements of governing code authorities and as recommended by the insulation manufacturer for full system responsibility.	
10	Adhesive Tapes	Complete selection of insulation manufacturer's recommended taping materials.	
11	Fire-Stop Sealants And Other Fire-Stop System Components	Complete selection of fire stop manufacturer's recommended vinyl-type non-asbestos fire stop systems. Provide complete systems complying with UL 1479 and ASTM E814 with a two or three hour fire rating. Provide equal fire protection as provided by fire-rating of construction penetrated. Fire stop systems shall also be gas and watertight. Fire Stop Systems by Dow Corning Corporation, or equal.	
12	Single-Ply Roofing	Comply with the Factory Mutual Publication 1-29 Technical Advisory Bulletin for wind resistance. Provide uniform ballast weight distribution over entire roof surface. Comply with FM wind uplift criteria at corners and perimeters. Provide combined ballast and single ply roofing manufacturer's recommended screw and plate fasteners located in accordance with FM 1-29 TAB 1. Comply with applicable insurance rating bureau requirements as required by the California Building Code, latest edition and International Building Code, latest edition, unless more restrictive requirements are specified or required. a. Out-of-Plane: 1/8-inch maximum in 10 foot-0 inches and 1/16-inch maximum in any 12-inches measured along the plane.	

		Last Updated	Sep 1, 2025
Item	**Parameter**	**Criteria**	**Notes**
		b. Maximum Offset in Plane Alignment: 1/16-inch. c. Variation From Slope: 1/8-inch maximum in 10 foot - 0 inches. A smooth type, polyester scrim reinforced thermoplastic polyolefin based membrane for use as a single ply roofing membrane and flashing material	
		Membrane by GAF Materials Corporation, Or equal.	
13	Single-Ply Roofing Ballast	Smooth, rounded, river washed stone from 3/4-inch to 1-1/2-inch in diameter applied at a rate of 1,000 pounds per square, spread evenly over the surface without adhesive.	
		Provide granite or other stone capable of withstanding exposure without deterioration.	
14	Polyvinyl Chloride (PVC) Roofing	Comply with Factory Mutual Publication Class 1-90 (Wind Uplift Attachment Criteria). Class A fire rated assembly in accordance with UL-790 or ASTM E 108. Roof system shall comply with all applicable building codes and California Building Code Title 24, Section 118. 1. PVC roofing: Fabric reinforced PVC sheet, ASTM D4434 for Type II PVC membranes. Fiberglass reinforcing material, 80 mils minimum polymer thickness, 40 mils thickness above scrim, 110 lbf/in minimum breaking strength, white color 2. Membrane Manufacturer's membrane shall be of consistent base formulation for a minimum of 50 years. Manufacturer and membrane shall be listed in Cool Roof Rating Council product listing and roofing membranes shall be tested by CRRC-1. 3. Warranty: Manufacturer's 30-year system warranty (20 year material and labor with 10 year extension on material), Contractor's two (2) year warranty. Early Bird warranties are not acceptable. 4. Components including roofing insulation, fasteners, and walkways for roofing system	

		Last Updated	Sep 1, 2025
Item	**Parameter**	**Criteria**	**Notes**
		from same manufacturer as membrane roofing. 5. Sika Sarnafil (Membrane: Sarnafil S327 EnergySmart 60-mil), Carlisle Syntec (Membrane: 60-Mil Sure-Flex PVC KEE), Johns Manville (60-Mil PVC KEE by Cooley Group), or equal. 6. Pre-Installation meeting between IEUA, Design Engineer, Applicator/Contractor, Roofing Manufacturer's Representative, and related Subcontractors shall be held at least two(2) weeks prior to installation.	
15	PVC Roofing Auxiliary Materials	1. Sheet Flashing: standard reinforced PVC sheet flashing of same thickness and color as PVC sheet. 2. Flashing Membrane Adhesive: solvent-based reactivating-type adhesive used to attach PVC flashing membrane to vertical (flashing) substrate. 3. Membrane Attachment Bar: one(1) inch wide, pre-punched aluminum bar used to attach PVC field membrane at all perimeter and base-angle transitions. 4. Membrane bonding adhesive: Manufacturer's standard, water based, Low VOC bonding adhesive 5. Metal Termination Bars: Manufacturer's standard predrilled stainless steel or aluminum, with anchors 6. Fasteners: factory-coated steel fasteners and metal plates complying with corrosion-resistance provisions in FM Global 4470 and acceptable to roof manufacturer. 7. Cover Board: by Georgia-Pacific DensDeck, or approved equal. ASTM C 1177, glass-mat faced, water resistant gypsum. Smoke developed and flame spread (ASTM E-84): 0, Mold resistance (ASTM D3273): 10, Compressive strength (ASTM C 473): 900psi, Board size: ½"x4'x8'. 8. Cover Board Adhesive: urethane based, low-rise foam adhesive shall be used to attach cover board to top layer of insulation.	

			Last Updated Sep 1, 2025
Item	**Parameter**	**Criteria**	**Notes**
		9. Roof Insulation: Polyisocyanurate board insulation, ASTM C 1289-11, Type II, Class 2, Grade 2 (20 psi). Zero Ozone Depletion Potential from blowing agent (HCFC-free), Long-Term Thermal Resistance R-Value based on ASTM 1303-11 and/or C AN/ULC S770-09.Facer type: coated glass face, board size: 2.6”x4’X8’ (R-15.0), Total Thermal Resistance Value: R-30.0 min. 10: Tapered Insulation: provide factory tapered insulation boards 11: Insulation and Cover Board Fasteners: corrosion-resistant, minimum #15 fastener with attachment plate to attach insulation to structural metal deck. 12: Flexible Walkways: factory-formed, non-porous, heavy0-duty, slip-resisting, surface-textured walkways pads or rolls.	
16	Thermoplastic Ketone Ethylene Ester (KEE) coated polyester fabric-reinforced fleece-backed sheet	ASTM D6754. a) Breaking Strength, minimum, ASTM D751: Machine direction, 500 lbf (87 kN/m); Cross machine direction 400 lbf (70 kN/m). b) Tear Strength, minimum, ASTM D751: Machine direction, 125 lbf (22 kN/m); Cross machine direction (145 lbf (25 kN/m). c) Elongation at Break, ASTM D751: 20 percent. d) Dynamic Impact/Puncture Resistance, ASTM D5635: Pass. e) Minimum Membrane Thickness, nominal, less backing, ASTM D751. f) Thickness over fiber, optical method: 0.016 inches. g) Accelerated Weathering, ASTM G155 and ASTM G154: Not greater than 5,000 hr., no cracking or crazing. h) Abrasion Resistance, ASTM D3389: Not greater than 2,000 cycles, H-18 wheel, 1,000 g load. i) Color: White.	Sheet Flashing: Manufacturer's standard, smooth-backed, sheet flashing of same material, type, reinforcement, thickness and color as KEE roof membrane

		Last Updated	Sep 1, 2025
Item	**Parameter**	**Criteria**	**Notes**
		j) Solar Reflectance Index (SRI), ASTM E1980: 110 (White, initial), 86 (White, 3-yr aged).	
17	Auxiliary Roofing Materials	As recommended by roofing system manufacturer for intended use, and compatible with membrane roofing.	Liquid-type auxiliary materials shall comply with VOC limits of authorities having jurisdiction.
16	Membrane Protection Concrete Pavers	Interlocking Ballast Pavers by Westile, an Oldcastle Company, Or equal.	
17	Vapor Barrier	Rufco 4000B by Raven Industries, Incorporated, Or equal.	
22	Lip Termination Bar	Extruded aluminum termination bar with angled lip caulk receiver and lower leg bulb stiffener. Pre-punched slotted holes at 6" on center, 3/4" x 10’ with 0.090" cross section.	
		GAF EverGuard Liptermination Bar by GAF Materials Corporation, Or equal.	
23	Miscellaneous Materials	1. Bonding Adhesive: As recommended by the roofing manufacturer. 2. Splicing Cement: As recommended by the roofing manufacturer. 3. Lap Sealant: As recommended by the roofing manufacturer. 4. Deck Primer: As recommended by roofing manufacturer. 5. Caulking and Sealants: As recommended by the roofing manufacturer. 6. Protection Board: As recommended by the roofing manufacturer for use beneath membrane protection pavers.	

		Last Updated	Sep 1, 2025
Item	**Parameter**	**Criteria**	**Notes**
		7. Mechanical Fasteners and Plates: Stainless steel and plates as recommended by the roofing manufacturer.	
25	Flashing And Trim	Flashing and trim shall be permanently watertight, and not deteriorate in excess of manufacturer's published limitations.	
		Flashing and trim to be fabricated and installed to meet the requirements of FM 1-90 and applicable requirements of the California Building Code, latest edition and the International Building Code, latest edition.	
		Comply with fabrication details recommended by SMACNA.	
26	Stainless Steel Flashing And Trim	Provide sheet stainless steel, Type 304 complying with ASTM A 176, with No. 2D dead soft, fully annealed finish, unless otherwise specified.	
27	Cast-In-Place Roofing Reglets And Counterflashing	Provide stainless steel, Type 304, (.020-inch) built-in-place reglets with wind lock clips.	
		Type CO Reglet for cast-in-place application by Fry Reglet Corporation, Or equal.	
28	Fiberglass Reinforced Plastic (FRP) Doors And Frames	General: a. Fiberglass Mat: Minimum 1.5 ounces per square foot. b. Resins: Manufacturer’s formulation for fabricating units to meet specified requirements.	
		Manufactured Units:	
		1. Fiberglass Reinforced Plastic (FRP) Doors: a. Thickness: 1-3/4 inches. b. Thermal Insulating Value: ‘R’ Factor 11. c. Construction: 1) Core: End-grain balsa wood, resin-impregnated. 2) Door Plates: Molded in one continuous piece, resin reinforced with hand-laid glass	

		Last Updated	Sep 1, 2025
Item	**Parameter**	**Criteria**	**Notes**
		fiber mat, nominal 1/8-inch thick, minimum 15 mil gelcoated surface. 3) Door Edges: Minimum three (3) layers resin-reinforced glass fiber mat, nominal 3/8-inch thick, machine tooled. d. Finish: Smooth gloss surface, minimum Value 88 in accordance with ASTM D 523.	
		2. Fire-rated Fiberglass Reinforced Plastic (FRP) Doors: UL approved, and as follows: a. Thickness: 1-3/4 inches. b. Thermal Insulating Value: 'R' Factor 11. c. Construction: 1) Core: Fire-resistant mineral core. 2) Door Plates: Molded in one continuous piece resin, reinforced with hand-laid glass fiber mat nominal 1/8-inch thick, minimum 25 mil gelcoated surface. 3) Door Edges: Minimum two (2) layers resin-reinforced glass fiber mat, nominal 1/4-inch thick, machine tooled. d. Finish: Smooth gloss surface, minimum Value 88 in accordance with ASTM D 523.	
		3. Fiberglass Reinforced Plastic (FRP) Frames: a. Construction: One-piece pultruded fiberglass reinforced plastic, minimum 1/4-inch wall thickness, jamb-to-head joints mitered and reinforced with (FRP) clips and stainless steel fasteners conforming to SDI requirements for performance equivalent to 16 gage steel frames. b. Frame Profile: 5-3/4 inches deep, 2 inches wide face; double rabbeted with 5/8-inch high stop. c. Finish: Satin finish, with true and consistent color throughout frame thickness.	
		4. Fire-rated Frames: UL approved, and as follows: a. Construction: Type 304 stainless steel, or steel gel-coated to match doors.	
		5. Lites and Louvers: a. Lites:	

		Last Updated	Sep 1, 2025
Item	**Parameter**	**Criteria**	**Notes**
		1) Stops: Pultruded fiberglass reinforced plastic construction. 2) Fasteners: Stainless steel screws as recommended by manufacturer. 3) Fire-rated: Stainless steel, Type 304 UL rated frames. b. Louvers: 1) Construction: Molded solid vanes; pultruded fiberglass reinforced construction. 2) Finish: Satin finish, with true and consistent color throughout frame thickness.	
		6. Fiberglass Reinforced Plastic (FRP) Removable Transoms: a. Construction: Transoms shall match door frame construction and color.	
		Fiberglass doors and frames by FIB-R-DOR Division of Advance Fiberglass, Inc., Or equal.	
29	Non-Rated Wall Access Doors	Stainless Steel KRP-DSC-214M by Karp Associates, Or equal.	
30	Overhead Rolling Doors (High Speed Roll-Up Door)	Speed-Master Series-Model 1500 by Hörmann Flexon LLC. Phone: 1-800-365-3667, website: www. HORMANN-FLEXON.com, Or equal.B.	
31	Painting	A. Shop clean and prime all ferrous metal and galvanized surfaces, exposed and unexposed, except lubricated surfaces, with door manufacturer's standard rust inhibitive primer drying to a flat sheen.	
32	Aluminum Storefront Windows And Framing	Trifab VG 451T (Thermal) Storefront System by Kawneer Company, Incorporated, Or equal.	
33	Exposed Aluminum Polyvinylidene Fluoride Based Coating	Duranar Metallic XL Specialty Color 4-Coat System by PPG Industries Coatings and Resins Division, or equal.	
34	Skylights	Model DDCAP1 3636, by Wasco Products Incorporated, Or equal.	
35	Fall Protection Safety Screens	Provide 1 inch square mesh consisting of 12 gage galvanized steel wire. Fasten mesh to the extruded aluminum retainer assembly.	

		Last Updated	Sep 1, 2025
Item	**Parameter**	**Criteria**	**Notes**
36	Aluminum Finishes	A. General: Comply with NAAMM "Metal Finishes Manual" recommendations for application and designations of finishes. B. Finish designations prefixed by AA conform to the system for designations of aluminum finishes established by the Aluminum Association. C. Class I or Class II, Clear-Anodized Finish: AA-C22A41 (Chemical Finish: etched, medium matte; Anodic Coating: Class I Architectural, clear film thicker than 0.7 mil complying with AAMA 607.1. Class II Architectural 0.7 mil.	
37	Finish Hardware - Hinges	Provide all doors with mortise hinges, unless specifically scheduled otherwise.	
		FBB 199 and FBB 191 by Stanley Commercial Hardware, Or approved equal.	
38	Finish Hardware-Mortise Locks Sets	Extra Heavy Duty Mortise Lockset L9000 Series with Lever Handles by Schlage Part of Worldwide Ingersoll-Rand Corporation, Or equal.	
39	Finish Hardware-Panic Exit Devices	Von Duprin Part of Worldwide, Or equal.	
40	Finish Hardware-Cylinders And Keying System	Cylinders and Keying by Schlage Part of Worldwide Ingersoll-Rand Corporation. No equals allowed.	
41	Finish Hardware-Fire Department Key Lock Box	Knox Company, Model 3200R Knox-Box, Or equal.	
42	Finish Hardware-Door Closers	4040 XP Heavy Duty Closer by LCN Part of Worldwide Ingersoll-Rand Corporation, Or approved equal.	
43	Finish Hardware-Floor Stops	FB13/14R, FB17 by Glynn-Johnson Part of Worldwide Ingersoll-Rand Corporation, Or approved equal.	
44	Finish Hardware-Stripping And Seals	No. 4301CRL by Pemko Manufacturing Company, Or equal.	
45	Finish Hardware-Thresholds	172A, 176A by Pemko Manufacturing Company, Or equal.	
46	Finish Hardware-Astragals	No. 357SS by Pemko Manufacturing Company, Or equal.	

		Last Updated	Sep 1, 2025
Item	**Parameter**	**Criteria**	**Notes**
47	Finish Hardware-Sealants	Provide butyl rubber sealant complying with FS TT-S-001657 for use with thresholds.	
48	Finish Hardware-Flush Bolts	GJ FB6 Extension Flush Bolts by Glynn-Johnson Part of Worldwide Ingersoll-Rand, Or equal.	
49	Finish Hardware-Coordinators	COR 1, 2 and 3 Series with FB Series by Glynn-Johnson Part of Worldwide Ingersoll-Rand, Or equal.	
50	Glass And Glazing-Clear Wire Glass (Interior Door/Transom Lites	Polished Plate Wire Glass by PPG Industries, Incorporated, Or equal.	
51	Glass And Glazing-Insulating Glass	Caribia Tinted Tempered Commercial Insulating Glass Units by PPG Industries, Inc., Or equal.	
52	Glass And Glazing-Clear Tempered Insulating Glass	Clear Tempered Commercial Insulating Glass Units by PPG Industries, Inc., Or equal.	
53	Glass And Glazing-Clear Tempered Monolithic Glass (Interior Door/Transom Lites	Clear Tempered Monolithic Commercial Glass Units by PPG Industries, Inc., Or equal.	
54	Glass And Glazing-Tinted Tempered Monolithic Glass (Exterior Door/Transom Lites	Caribia Tinted Tempered Monolithic Commercial Glass Units by PPG Industries, Inc., Or equal.	
55	Glazing Sealants And Tapes-Structural Silicone Sealant	Dow Corning 995 Silicone Structural Adhesive by Dow Corning Corporation, Or equal.	
56	Glazing Sealants And Tapes-Exterior One-Part Silicone Rubber Sealant	Spectrum I by Tremco, Incorporated. Or equal.	
57	Glazing Sealants And Tapes-Preformed Butyl	Polyshim II Glazing Tape by Tremco, Incorporated. Or equal.	

		Last Updated	Sep 1, 2025
Item	**Parameter**	**Criteria**	**Notes**
	Rubber Glazing Sealant		
58	Glazing Sealants And Tapes- Dense Compression Wedge Gaskets	Dense Silicone Wedge Gaskets SCR-900 by Tremco, Incorporated. Or equal.	
59	Miscellaneous Glazing Materials	A. Setting Blocks: Neoprene, 70-90 durometer hardness, with proven compatibility with sealants used as recommended by the glass manufacturer. B. Spacers: Neoprene, 40-50 durometer hardness, with proven compatibility with sealants used as recommended by the glass manufacturer. C. Compressible Filler Rod: Closed-cell or waterproof-jacketed rod stock of synthetic rubber or plastic foam, proven to be compatible with sealants used, flexible and resilient, with 5-10 pounds per square inch compression strength for 25 percent deflection.	
60	Translucent Fiberglass Sandwich Panels	Translucent fiberglass sandwich panels by Kalwall Corporation, www.kalwall.com. Or equal,	
61	Gypsum Wallboard	United States Gypsum Company, Dietrich Metal Framing, Or equal.	
62	Gypsum Wallboard - Wall/Partition Support Materials	400 USTE 20 DW EQ UltraSTEEL framing with complementary accessories by Dietrich Metal Framing. Or equal.	
63	Gypsum Wallboard - Furring Members	Z-furring (ZF-Series) by Dietrich Metal Framing	
64	Acoustical Ceilings- Acoustical Panels	Sanserra 573 Tegular by Armstrong. Or equal.	
65	Ceiling Suspension Materials- Exposed Suspension System	Prelude XL 15/16” Exposed Tee Systems by Armstrong. Or equal.	
66	Acoustical Panels- Perforated Metal Acoustical Panels	Eckoustic Functional Panels by Eckel Industries, Incorporated. Or equal.	
67	Resilient Tile- Rubber Tile	Noraplan Stone al by Nora Flooring Incorporated.	

		Last Updated	Sep 1, 2025
Item	**Parameter**	**Criteria**	**Notes**
68	Painting	Tnemec Company, Incorporated, Devoe High Performance Coatings, Or equal.	
69	Louvers And Vents	A. Aluminum Sheet: ASTM B 209, 5005 with temper as required for forming, or as otherwise recommended by the metal producer to provide the required finish. B. Aluminum Extrusions: ASTM B 221, Alloy 6063-T52. C. Anchors and Inserts: Use Type 316 stainless steel expansion bolt devices or drill and epoxy Type 316 stainless steel anchors. D. Bituminous Paint: SSPC-Paint 12 (cold-applied asphalt mastic). E. Blank-Off Panels: Provide 16 gage aluminum sheet with A42 Dark Bronze anodized finish. Provide Type 316 stainless steel fasteners, 12 inches on centers.	
70	Fixed Louvers	No. A6155 by Construction Specialties, Incorporated. Or equal.	
71	Finishes- Exposed Aluminum Polyvinylidene Fluoride Based Coating	Kynar 500 TRI-X by DeSoto Incorporated. Duranar XL by PPG Industries, Incorporated. Or equal.	
72	Louver Screens	A. Provide removable screens for all louvers. B. Fabricate screen frames of the same metal and finish as the louver units to which secured. Provide frames consisting of extra heavy duty extruded 0.090-inch aluminum for permanently securing screen mesh. Frames shall be rewirable. C. Use insect screen of 18 by 14 mesh, 0.0123-inch diameter stainless steel intercrimp wire. D. Locate screens on inside face of louvers. Secure screens to louver frames with machine screws, spaced at each corner and at 12 inches on centers. E. Provide minimum No. 8 stainless steel metal screws unless larger screws are required by screen size. F. Provide cross bar screen reinforcement of same material and finish as louver which	

		Last Updated	Sep 1, 2025
Item	**Parameter**	**Criteria**	**Notes**
		subdivides screens into maximum area of 50 square feet.	
73	Sill Extension	Gage and Finish: Same as louver.	
74	Self-Luminous Exit Signs	Everglo Signs by Self Powered Lighting Incorporated. Isolite Model 2040-01 Signs by Safety Light Corporation. Or equal.	
75	Fire Extinguisher Location Signs, Interior Room Identification Signs, And Chemical Area Safety Signs	A. Material: Subsurface silkscreened graphics on a transparent acrylic sheet, 0.08-inches thick with Helvetica Medium alphabet and matching arrows type face. Provide 2-inch high upper case letters and 1-inch high lower case letters. B. Fire Extinguisher Identification Sign: Provide 15-inch by 15-inch with square corners, unframed. Provide one for each surface mounted fire extinguisher. Background color red with white lettering. Sign shall incorporate a directional arrow	
76	Room Identification Signs	Provide 15-inch by 15-inch with square corners, unframed. Colored background with white lettering. Provide one sign for each of the followings rooms in the Centrifuge Building: Locate on wall adjacent to entry door into room. 1. Unisex Restroom. 2. Control Room. 3. Electrical Room (two signs). 4. Truck Loading Observation Room (at stairway #3).	
77	Chemical And Process Area Safety Signs	Safety signs shall be formed from rigid polystyrene or polyethylene plastic. Letters shall be 2-inch high upper case letters and 1-inch high lower case letters.	
78	Architectural Finishes	Architectural finishes of concrete prior to painting shall be uniform profile by blasting and or other methods.	Consider the use of Wunderfixx (or equal), a concrete smoothing compound for exterior concrete walls.
79	Paint Color of Architectural Features	Paint color of architectural features (facias, doors, exterior features systems, roof drains,	

			Last Updated	Sep 1, 2025
Item	**Parameter**	**Criteria**		**Notes**
		awnings) shall conform to IEUA color standards Contractor is responsible to color matching and/or field coating to match, other manufacturers' standards are not acceptable.		

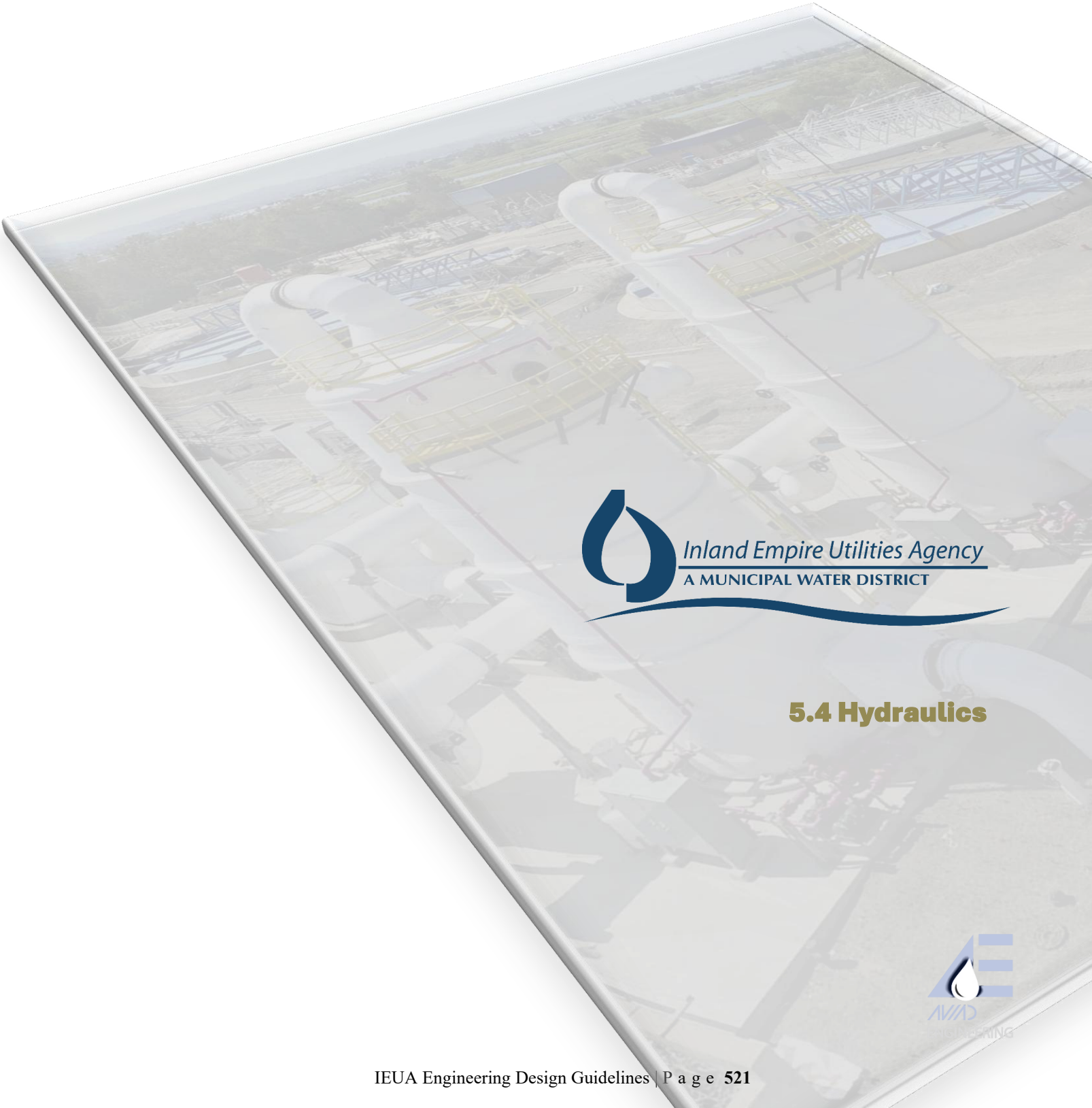

Inland Empire Utilities Agency
A MUNICIPAL WATER DISTRICT

5.4 Hydraulics

5.4 Hydraulics

		LAST UPDATED March 31, 2024	
Item	**Parameter**	**Criteria**	**Notes**
0	Scope	This document applies to Hydraulic Design Requirements.	
1	Peak Flows	Design Plants to convey the largest expected flow without leakage, overflow or spills.	
		Design facilities for containment of the highest wet weather flow when peaking factors exceed 2.2.	
2	Minimum Flows	Provide to determine process turndown requirements.	
3	Average Daily Flows	Evaluate total drainage area to determine the total expected flow requirements.	
		Assign standard land use planning factors to each sub-area to determine total flow estimates.	
		Follow design guidelines from the Strategic Plan.	
4	Pipeline and Piping Design	Refer to Sanitary Sewer Requirements.	
5	Flow Distribution	Planned flow routing per Strategic Plan	
6	Sidestreams	Both plants have process drainage and storm water collection systems convey water to the Waste Sidestream Pump Stations.	
		The pump stations send this water to primary influent distribution boxes for treatment.	
		The systems meet EPA requirements for treating on site flows and not count as primary influent from the collections system.	

Inland Empire Utilities Agency
A MUNICIPAL WATER DISTRICT

Engineering Design Guidelines

Section 6- Processes

Section 6- Processes

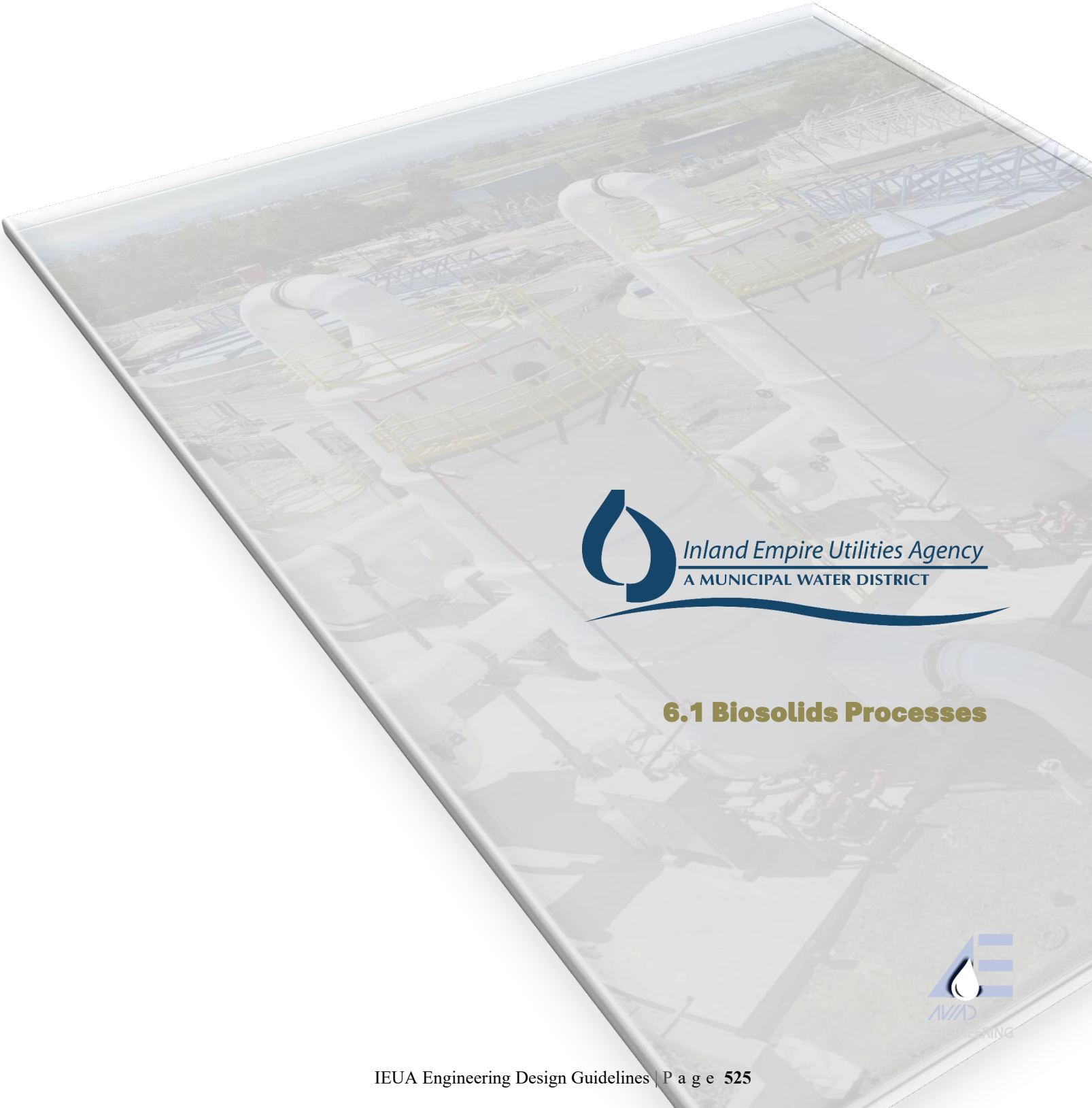

Inland Empire Utilities Agency
A MUNICIPAL WATER DISTRICT

6.1 Biosolids Processes

6.1 Biosolids Processes

		Last Updated	June 2024
Item	**Parameter**	**Criteria**	**Notes**
0	Scope	This document applies to Biosolids Processes.	
1	Screening	Rotary drum screens are preferred with openings from 1/16 inch to 3/8 inch.	Extremely important to biosolids treatment due to quality impacts on biosolids and operational problems such as clogging, wear, damage.
			Concerns: Odors, energy, cleaning, maintenance.
		Provide multiple units with one additional as standby.	Chose removal not communition. Concerns: Comminuters just pass on the debris.
		Provide a manually cleaned gravel trap ahead of each screen.	Use fine screens preceded by coarse screens.
		Approach velocity of 3 fps at peak daily flow. Be able to accommodate peak hour flow and not exceed 4 fps.	Typ. fine screen openings 0.10 to 0.25 inches Concerns: Finer screens remove more organic matter. Avoid removing too much organic matter with screenings.
		Provide odor control, weather protection and standby emergency power.	Moving screens (revolving drums), filter screens, woven wire screens, perforated plates and closely spaced bars.
		Provide coarse screens (with 0.25 to 2 inches) upstream of fine screens.	In-channel rotary drum screens and filter screens are best.
		Single stage is simplest.	Single or dual stage options.

		Last Updated	June 2024
Item	**Parameter**	**Criteria**	**Notes**
2	Grit Removal	Provide odor control, weather protection and standby emergency power.	Extremely important to biosolids treatment due to detrimental impacts on biosolids quality and physical problems such as clogging, wear, damage, reduced digestion volume. Concerns: Odors, energy, cleaning, maintenance, space.
		Vortex grit units followed by grit cyclones and screw classifiers. Provide multiple units with one additional as standby.	Vortex grit units and aerated grit chambers good choices. Concerns: Aerated chambers require lots of space and energy.
		All units in service excluding standby treat peak hour flow.	Avoid sludge degritting-too messy and difficult to maintain. Huge odor issues.
		Conduct grit characterization studies to determine quantities of grit in wastewater, specific gravity and ratio of grit sizes.	Peak grit load frequently occurs at peak flow rates. Provision of 35-40 seconds retention time at these peak rates will be required.
		Design for removal of 95% of the particle size that constitutes 90% of the particles at that size or larger.	Provide for grit washing, classification and dewatering plus storage in commercially available containers for pickup and disposal.
			Mechanically induces vortex grit removal units are available from Smith & Loveless (Pista grit), Jones+Atwood (Jeta), Infilco Degremenot, Vulcan Industries, and John Menunier.

		Last Updated	June 2024
Item	**Parameter**	**Criteria**	**Notes**
3	Primary Sedimentation	Provide odor control.	Best source of highly digestible material (high VSS %).
			Avoid co-settling which deteriorates good primary solids. Do not allow scum to mix with primary solids.
		Do not exceed 3,500 gpd/sf at QPKDY with one unit off line.	Typical Range: 5-9% solids Goal: 6% solids.
		Add Lamella plates if the above SOR criteria can't be achieved. Add ferric chloride as necessary to ensure 6% solids.	Chemicals such as lime, polymer, aluminum salts and iron salts can improve the performance of primary clarifiers. Ferric Chloride is a good choice to achieve high solids content and helps avoid phosphorus compounds in digestion and piping.
4	Secondary Sedimentation	Keep SLR <30 lbs/d/sf, SOR <400 gpd/sf (with one clarifier not in operation at QMAX30) and assuming MLSS 3,000 mg/l and underflow about 8,000 mg/L.	Typically problematic for digestion process due to low solids concentrations (1% or less) that are difficult to thicken, biological cells versus organic material, and low volatile content. Concerns: WAS decomposes at different rate than Primary solids and often contributes to foaming.
5	Thickening WAS	Operate DAF as required to ensure >5% solids. Provide odor control.	DAFT is the best choice. Range: 4-8% Goal: >5%.
			If necessary, add chemicals.
6	Combine Solids to Stabilization	Provide multiple blend tanks with one spare.	Range: 4-6% Goal: 5%.

		Last Updated	June 2024
Item	**Parameter**	**Criteria**	**Notes**
			Blend tanks are good for process control and uniformity.
7	Stabilization Options	Anaerobically digest solids.	Digestion (anaerobic or aerobic), Dual Digestion (aerobic/anaerobic) Lime stabilization, dewatering/drying, combustion.
			Anaerobic digestion typically preferred due to reduction in solids and the production of digester gas to power equipment, produce electricity and heat digestion.
8	Anaerobic Digestion Options	Mesophilic (MAD), **Thermal Hydrolysis + Mesophilic (TH+MAD)**, **Acid/Gas Digestion**.	Mesophilic (MAD), Thermophilic (TAD), Thermally Phased Anaerobic Digestion (TPAD), **Thermal Hydrolysis + Mesophilic (TH+MAD)**, 3 Phase Digestion, **Acid/Gas Digestion**. Concerns: Class A or Class B product. There is no regulation requiring Class A product. However, various beneficial uses for biosolids have quality requirements.
		Must meet electricat code requiremtns for Class and Div. as per NEPA.	Recuperative digestion. Concerns: A good option to increase SRT in digestion and improve performance.

			Last Updated June 2024
Item	**Parameter**	**Criteria**	**Notes**
9	Predigestion Options		Hydrolysis: **Thermal**, Chemical, Biological or Mechanical plus combinations. Concerns: Thermal Hydrolysis has been proven to effectively allow double concentrations of digester solids while maintaining excellent viscosity.
10	Biosolids Destruction/Minimization	None recommended.	Cannibal, Microsludge, Ultrasonic, Ozonation, OpenCEL.
11	Anaerobic Digestion Structures	Cylindrical digesters with fixed covers.	Cylindrical (Typically Reinforced concrete, prestressed) with fixed or floating covers, typically greater diameter than height. Height often <35 ft. to accommodate mixing and pumping. Egg-Shaped Digesters are an alternative, but expensive. Concerns: overflow, supernating, conical bottoms, access for cleaning. Floating covers can not only accommodate variable liquid levels but also gas storage.
12	Digestion Mixing	Pumped mixing, Draft tubes.	Pumped mixing, gas lances, gas diffusers, **draft tubes (gas or mechanical-external or internal)**, paddle mixers, bubble guns, linear motion.

		Last Updated	June 2024
Item	**Parameter**	**Criteria**	**Notes**
13	Digestion Heating	Heat exchangers or steam injection.	Boilers w/HEXs, steam injection.
14	Dewatering	BFPs (belt filter processes), Plate and Frame, Screw Presses, Centrifuges.	BFPs, Plate and Frame, Screw Presses, Centrifuges, lagoons. Concerns: Excellent performance, high capacity and odor control with Centrifuges. However, very high power costs.
			Concerns: BFPs use less energy but have water vapor, humidity and odor control issues. Lower capacity means more units.
			Concerns: Screw presses are somewhat between Centrifuges and BFPs in characteristics.
15	Co-Digestion		FOG, HSW, Food Waste, Manure. Concerns: Requires good receiving stations. Significant impacts on digestion process.
			Other agencies may be competing for feed stock. Long term sustainability may be an issue. Concerns: Quality control of incoming material.
16	Drying	Direct Driers	Direct or Indirect Driers, solar dying (passive or assisted).

		Last Updated	June 2024
Item	**Parameter**	**Criteria**	**Notes**
			Direct driers have problems with producing durable pellets with correlated dust problems.
			Direct driers are preferred. Can be linked with exhaust from gas turbines. Milorganite is produced using exhaust from gas turbines.
17	Beneficial Uses for Biosolids	Multiple options are critical for reliability.	Land application, compost, fuel for cement kilns, fuel for combustion followed by heat/energy recovery, land reclamation, fertilizers, landfill, daily cover for landfill, char, artificial soil.
			Frequently requires third party for implementation & operations.
18	Digester Gas Cleaning	Remove H2O, H2S and Siloxanes.	Combine with Heat/Energy production. Concerns: Siloxane Removal: GAC or Regenerative Silica gel.
		Assign to Design Build Operate or Design Build Own Operate.	Need to remove H20, H2S, Siloxane and possibly CO2. Concerns: H2O removal: Refrigerated dryers, desiccant dryers, coalescent filters, glycol adsorption.

		Last Updated	June 2024
Item	**Parameter**	**Criteria**	**Notes**
			Other potential removals: Halide, ammonia, nitrogen, VOCs. Concerns: H2S Removal: Dry Scrubbers, Wet scrubbers, iron salts, adsorption systems, catalytic scrubbers.
			Concerns: CO2 Removal: Amine, Cryogenic refrigeration, membranes, Pressure Swing Adsorption, Temperature Swing Adsorption, water scrubber.
19	Digester Gas Storage	Provide separate gas storage.	Greatly improves reliability. Balances gas pressure.
20	Heat/Energy Production	Gas Turbines are best choice for all issues. Contract with privatizers for DBO (design, build, and operate) or DBOO (design, build, own, and operate).	boilers, microturbines, fuel cells, **gas turbines+HRSGs**, steam turbines, **internal combustion engines**. Concerns: Fuel cells are extremely difficult to work properly. Steam turbines only fit for excessive amounts of steam, microturbines are problematic.
			Produce Natural Gas quality for sale to grid. This high quality gas can also be converted to LNG for use in vehicles.
			Privatization is a good choice for Heat/Energy production.

			Last Updated June 2024
Item	**Parameter**	**Criteria**	**Notes**
21	Emergency Flaring	Unless required, avoid ultra-low low emissions.	Low emissions or ultra-low emissions-per air quality.
22	Nutrient Recovery	Recover Phosphorus-Ostara.	Phosphorus recovery - Ostara.
23	Recycle Treatment	Provide sidestream treatment of recycles.	Ammonia, N and P from anaerobic digestion can be problematic for liquid treatment processes and plant permit requirements, especially if nutrient limits are low. Concerns: Anamox, DEMON are good process choices.

Inland Empire Utilities Agency
A MUNICIPAL WATER DISTRICT

6.2 Anaerobic Digester Rehab

6.2 Anaerobic Digester Rehab (Concrete Fixed Roof)

			LAST UPDATED June 2024
ITEM	**Parameter**	**Criteria**	**Notes**
0	Scope	This section applies to Cylindrical Digesters with Conical Bottoms, Reinforced Concrete, Fixed Roof	
1	Structures	Cylindrical with Conical bottom, reinforced concrete, fixed roof	
2	Performance	Solids Loading: 0.09 lbs VSS/Day-ft3	
		Detention Time (Average): 20 days	
		Operating Temperature: Up to Thermophilic Temperatures (127F)	
		Mixing Method: Gas Mixing	
		Methane Production (Average): 13 ft^3/lb VSS-destroyed	
		Volatile Solids Destruction (Average): 55%	
		Mixing Velocity Gradient: 80 per second	
		Turnover time: 20 minutes	
3	Specialty Coating Systems	Negative and Positive seals	
4	Insulation	Apply to exterior top deck. Pitch to promote stormwater drainage Thickness type: To Be Determined	
5	Access Holes	Two manways required at 180 degrees opposition. Should be epoxy coated, gasketed, bolted (stainless bolts/washers/etc.)	
6	Fire Protection	Hydrant and fire extinguisher protection per NFPA	
7	Recycled Water Supply System	Recycled water necessary for cleaning purposes. Install hose bibs at ground level and at roof level. Utilize 1" SS hose bib with	

			LAST UPDATED June 2024
ITEM	**Parameter**	**Criteria**	**Notes**
		vacuum breaker and quick connect fitting. Supply piping 1” carbon steel equipped with 1” straight check valve. Protect in place on digester wall or strut framing.	

6.2.1 Digester Mixing Systems

		LAST UPDATED	June 2024
ITEM	**Parameter**	**Criteria**	**Notes**
0	Scope	This section applies to Digester Mixing Systems	
1	Gas Mixing Blowers	Rotary Lobe Positive Displacement Blower V-Belt Drive Configuration Blower Speed: 850 rpm Motor Speed: 1,800 rpm rated for 75 hp at 460 volt(V)/60 hertz(Hz). Not on variable frequency drive Manufacturer: AERZEN or equal	
2	Mixing Requirements	1,400 scfm (based on digester gas with a specific gravity of 0.8 and temperature rise of 132F)	
		Pressure differential of 7.5 psig	
3	Vibration Isolation Kit	Blower skid should utilize vibration isolation at roof attachments. Specification TBD.	

6.2.2 Sludge Recirculation

			LAST UPDATED June 2024
ITEM	**Parameter**	**Criteria**	**Notes**
0	Scope	This section applies to Sludge Recirculation	
1	Sludge Recirculation Pump	Horizontal Centrifugal Pump 600 gpm at 115 ft TDH Pump speed of 1,650 rpm (max 1,800 rpm) with a 30 hp motor operating on 230/460 V and 60 Hz Manufacturer: WEMCO Model F4K-MH Or equal	
2	Sludge Grinder	Baldor Electric Co., No. BZ262035, Serial No. F0910162073, Frame 182TC Or Equal	

6.2.3 Sludge Heating

			LAST UPDATED June 2024
ITEM	**Parameter**	**Criteria**	**Notes**
0	Scope	This document applies to Sludge Heating	
1	Heat Exchanger	Type: Tube in Tube Capacity: 1.0X10^8BTU/Hr	
2	Insulation	Application: Surround heat exchanger and hot water piping Thickness : 2” Finish: weather proof cladding	

6.2.4 Piping and Appurtenances

			LAST UPDATED June 2024
ITEM	**Parameter**	**Criteria**	**Notes**
0	Scope	This section applies to Piping	
1	Application Digester Gas Service	Stainless steel piping for all future digester gas piping replacements	
2	Pipe Material Digester Gas Service	Ductile Iron ANSI A21.51 (AWWA C151) or Cast Iron ANSI A21.10, epoxy coated. OR ASTM A312/A312M Stainless Steel Grade 316. Type 316L when field welding is required	
3	Flanges	For stainless steel piping: ANSI B16.5 Class 150lb Flat or Raised-Face Flange	
		For ductile iron pipe: ANSI B16.1 Class 125lb Flat or Raised-Face Flange	
4	Pipe Materials Sludge Circulation Services	Ductile Iron (Glassed Lined) ANSI A21.51 (AWWA C151) Or cast iron ANSI A21.10 Flanges: ANSI B16.1	
5	Gaskets Digester Gas Service	Stainless Steel Pipe Flange conforming to ANSI B16.5 Class 150lb Flat or Raised-Face Flange: 1/8” (3.17mm) thick Neoprene Full Face, with a hardness of not less than 40 measured on a shore durometer “A” scale Ductile Iron Pipe Flange conforming to ANSI B16.1 Class 125lb Flat or Raised-Face Flange: 1/8” (3.17 mm) thick Neoprene Full Faced, with a hardness of not less than 40 measured on a shore durometer “A” scale	

			LAST UPDATED June 2024
ITEM	**Parameter**	**Criteria**	**Notes**
6	Gaskets Sludge Circulation Service	Ductile Iron Pipe Flange conforming to ANSI B16.1 Class 125lb Flat or Raised-Face Flange: 1/8" (3.17 mm) thick Nitrile Full Faced per AWWA C111	
7	Flex Couplers	Install on blower suction/discharge lines. Follow specification 40 05 13 for process piping standards.	
8	Purge Points	Purge Points shall be provided in the piping at each branch system manual shut off valve, at both sides of the valve, and at other necessary points in the system Purge Points shall not be less than ½" ID and shall be fitted with a manual shut off valve, which shall be plugged or capped	
9	Pipe Identification	Aboveground piping or tubing shall be identified including on outside of insulation where applicable, by one of the following: a) The entire piping or tubing system shall be painted yellow-orange; b) The piping or tubing system shall be provided with yellow-orange banding that has a minimum width of 1"; c) The piping or tubing system shall be labelled or marked	

			LAST UPDATED June 2024
ITEM	**Parameter**	**Criteria**	**Notes**
		"DIGESTER GAS", utilizing labels or markings; d) Another color scheme approved by IEUA or the authority having jurisdiction.	
10	Insulation	To be installed on heat exchanger supply and return lines and heat exchanger body, as well as gas mixing piping. Glass fiber molded pipe insulation 2" thick c/w stainless steel jacketing, or approved equivalent.	

6.2.5 Drip Trap and Sediment Traps

			LAST UPDATED June 2024
ITEM	**Parameter**	**Criteria**	**Notes**
0	Scope	This document applies to Drip Trap and Sediment Trap	
1	Drip Trap	Automatic 1" NPT inlet/outlet Varec Biogas 245 Drip Trap, or approved equivalent	
2	Condensate and Sediment Trap	Carbon Steel Construction with Epoxy Coated Internals and External Rust Inhibitor Primer Finish OR Hot dipped galvanized carbon steel OR All Stainless Steel Varec Biogas 233 Condensate and Sediment Trap, or approved equivalent.	

6.2.6 Hazard Classification

		LAST UPDATED	June 2024
ITEM	**Parameter**	**Criteria**	**Notes**
0	Scope	This section applies to electrical hazard zones around the tanks.	
1	NEC Area Electrical Classification (All Class I, Group D)	<u>Division 1</u> Tank interior. Areas above and around digester cover; envelope 10-ft above the highest point of cover when cover is at its maximum elevation, and 5-ft from any wall <u>Division 2</u> 15-ft above Division 1 area and cover and 5-ft beyond Division 1 area around tank wall.	
2	Hydrant and portable fire extinguisher	Hydrant at grade in accordance with NFPA 820 Section 7.2.4. Portable fire extinguisher at grade and on roof per NFPA 820.	

6.2.7 Grounding/Lightning Protection

			LAST UPDATED June 2024
ITEM	**Parameter**	**Criteria**	**Notes**
0	Scope	This section applies to ancillary devices	
1	Grounding	To be updated based on the outcome of RP-1 Digester 7 Roof Repairs	
2	Lighting	To be updated based on the outcome of RP-1 Digester7 Roof Repairs.	
3	Receptacles	To be updated based on the outcome of RP-1 Digester 7 Roof Repairs	

6.2.8 Instrumentation

		LAST UPDATED	June 2024
ITEM	**Parameter**	**Criteria**	**Notes**
0	Scope	This section applies to Instrumentation on digester gas and digester headspace service. Note that the heat exchanger system is still to be added.	
1	Pressure Indicating Transmitter	Ashcroft B724V X07 (rated for hazardous locations) Material: Viton/stainless steel	
2	Pressure Switch (high or low)	HI-Press switch 0-30 psig (set to close at 15 psig) LO-press switch close @ 4" WC; open @ 6" WC	
3	Flow Meter	.Manufacturer: Fluid Component International (FCI) Model ST-100 or equal. Install on digester gas withdrawal piping and on blower discharge line. Meter sensor to be thermal dispersion technology. All wetted materials to be of 316 SS construction. Components to be NEMA rated. Accuracy should be plus 1% of calibrated span.	
4	Level Transducer	Rosemount To Be Determined based on the outcome of RP-1 Digester 6&7 Roof Repairs	
5	Temperature Switch	To Be Determined based on the outcome of RP-1 Digester 6&7 Roof Repairs	
6	Gages	<u>Digester Gas Service</u> Upstream of compressor: Magnehelic (span -15 psi to +15 psi) or Equal Downstream of compressor:	

			LAST UPDATED June 2024
ITEM	**Parameter**	**Criteria**	**Notes**
		Ashcroft (0 to 30 psi)	

6.2.9 Pressure/Vacuum Relief

		LAST UPDATED	June 2024
ITEM	**Parameter**	**Criteria**	**Notes**
0	Scope	This document applies to Pressure/Vacuum Relief	
1	Pressure (Explosion) Relief Valve	Setting to 14" WC Body : Aluminum (standard), 316 stainless steel (optional) Trim: Aluminum (standard), 316 Stainless steel (optional) Insert: BUNA-N Flange: ANSI 125 flat face or ANSI 150 raised face Manufacturer: Varec 7100B Series Or equal	
2	Flash Back Flame Arrestor	Housing: Cast Aluminum Bank: Low copper aluminum extensible frame with 316 SS sheets Hardware: Zinc plated (standard), stainless steel (optional) Flange: 125 lbs ANSI flat face Manufacturer: Varec 5010 Series Or equal	

6.2.10 Digester Gas Valve

		LAST UPDATED	June 2
ITEM	**Parameter**	**Criteria**	**Notes**
0	Scope	This document applies to Digester Gas Valves	
1	Isolation Valves (long service life)	Type 316 Stainless Steel Body Ball and Stem; Sour Gas Trim to meet NACE MR0175 Flanged Ends ANSI/ASME B16.1; ASME Class 150 rating and Short Pattern for 75 mm and larger Reinforced PTFE Seats of memory seal type with both seats in tension or spring loaded to provide leak tight seal at low and high pressures Enclosed Worm Gear Operator for 150 mm and larger ULC approved, fire safe to ANSI/API 607 AGA certified for digester gas service	
2	Isolation Valves (short service life)	Type: Plug valve, epoxy coated Operation: Manual with valve wrench Epoxy coated cast iron DeZurik valve Gate AWWA C500, 'O' Ring Seals, mechanical joints ends, Mueller A-2380-20 or DeZurik	
3	Check Valves	Thermal Operated Shutoff Valves Body: Cast Aluminum Pallet: Low Copper Aluminum Compression Spring 316 SS	

		LAST UPDATED	June 2
ITEM	**Parameter**	**Criteria**	**Notes**
		Flanges: ANSI 125 / 150 Pattern	
4	Bleed Vents	Type: Plug Valve Operation: Manual with valve wrench Gate AWWA C500, 'O' Ring Seals, mechanical joints ends, Mueller A-2380-20 or Eddy-IOWA (CLOW P-5155)	

Inland Empire Utilities Agency
A MUNICIPAL WATER DISTRICT

Engineering Design Guidelines

Section 7- Permits

Section 7- Permits

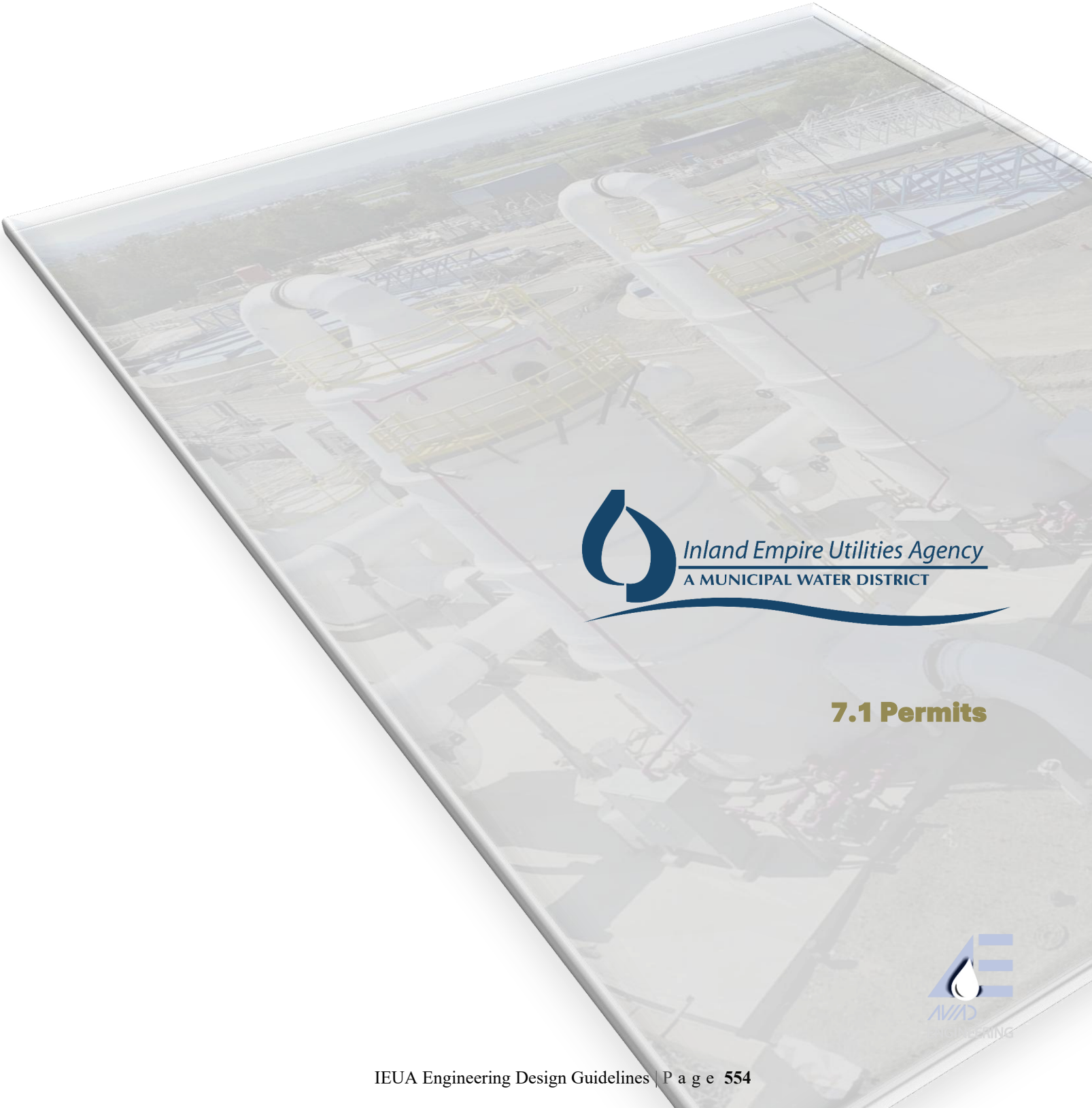

Inland Empire Utilities Agency
A MUNICIPAL WATER DISTRICT

7.1 Permits

7.1 Permits

			Last Updated June 2024
Item	**Parameter**	**Criteria**	**Notes**
1	Work in public right-of-way, will there be impact to the public?	If yes, Traffic Control Permit and Encroachment Permit.	IEUA will submit the documents required for the Encroachment Permit. IEUA will incorporate comments from the Cities into the plans. The contractor shall submit the required documents for and pay the fees for the Traffic Control Permit.
2	Work on Agency property, will it impact pedestrians using the sidewalk	If yes, pedestrian use closure and pedestrian detour plan.	
3	Is a non-process building being constructed?	If yes, the design must go through the respective city's Building Permit Department	
4	Will work be done in the public right-of-way near the border of two different cities?	If yes, depending on type of construction activity and limits to the required traffic control devices, you'll need traffic control and encroachment permits from both cities.	
5	Processing Standard Permits	Obtain a copy of the relevant agency's encroachment and traffic control permit applications via on-line (member agency website) or the most current hard copy.	Include copies of permits with specifications as attachments.
		The City of Ontario's encroachment and traffic control permit are separate applications.	http://www.ontarioca.gov/sites/default/files/Ontario-Files/Engineering/forms/encroachment_permit_a

		Last Updated	June 2024
Item	**Parameter**	**Criteria**	**Notes**
			pplication_form_revised_on_05-20-15.pdf http://www.ontarioca.gov/sites/default/files/Ontario-Files/Government/City-Forms/Engineering/traffic_control_permit_form.pdf
		Traffic control permit is not needed from San Bernardino County Flood Control.	
		San Bernardino County Transportation Division for public right-of-way work does require a traffic control plan.	
6	Processing Emergency Permits	Construction Manager (CM) to notify the city/county right away.	
		Provide first emergency responding contractor for application.	
		Complete permit application the same as for a regular permit with the emergency contractor's information. Keep copy for your records.	
		Submit the application and traffic control plan the same day to city/county (if during normal working hours) or next morning.	Check if electronic submittal is acceptable.
		Obtain permit fee cost from city/county.	
		With CM's approval, process check request.	
		Request that the check be returned to you for submittal.	
		Upon receipt of the check, scan a copy for your records and remit payment along with a copy of the permit for easy processing.	
		Emergency calls may be for Member Agency's infrastructure, but cannot know until response is made.	
		CM is to contact the Member Agency right away so they may inspect the project.	
		CM is to let you know if IEUA will be the lead on the repair or if the Member Agency will take the lead. If IEUA, then submit	

		Last Updated	June 2024
Item	**Parameter**	**Criteria**	**Notes**
		permit application(s). If Member Agency, then ask CM if they will be obtaining their own permit. If so, verify with CM that you can cancel your initial permit request.	
		Unless directed by Manager of Engineering to process the permit as an "emergency", the application should be processed as a regular request.	
7	Things to Remember	It's critical that the Engineering PM involves the Consultant during the planning process as permits have a long lead time.	
		You must keep organized files.	
		Regular follow-up on permit status with city/county, etc.	
		Build relationships with permitting agency staff (in person, telephone and email).	
		Don't communicate by only one method. Submit the application in person. Follow-up via email and phone.	
		When emailing, be sure to use their permit number in the subject line for their reference.	
		When submitting the application, ask the person taking the application what the anticipated turn-around time will be.	
		Mark calendar to follow-up. They get very busy and typically won't reach out to you.	
		Typically, you won't know the fee amount until the permit is ready. Then submit a check request from IEUA accounting or obtain from contractor. Check turn-around time is approximately one week.	
		Get a copy of each agency's calendar to know their mandated "black-out" dates. Some agencies are closed from Christmas Eve until the day after New Year's Day and neither allow street work during this time, nor will they process any new permit requests.	
		When submitting plans with permit application, 3 staples on left side or Chicago style if needed for each plan set.	

		Last Updated	June 2024
Item	**Parameter**	**Criteria**	**Notes**
		Not every permit is an emergency. Non-emergency permits processed as emergency will alienate member agencies and they may not be responsive in the future.	
8	Caltrans Encroachment Permits	Contact: Caltrans District 8 Nguyen, Tan D. 464 W. 4th Street, MS 619 San Bernardino, CA 92401-1400 Bus: 909-383-7544 Email: tan_d_nguyen@dot.ca.gov Email: t_d_nguyen@dot.ca.gov	
		Contacts vary from project to project and geographic locations. Website - "http://dot.ca.gov/hq/traffops/developserv/permits/pdf/manual/Appendix_G_(WEB).pdf"	Contact Information for District Offices
		Typically takes 3 to 5 weeks for a permit. Website - "http://dot.ca.gov/hq/traffops/developserv/permits/pdf/publications/E.P._Application_Guide_Booklet.pdf "	Encroachment Permit Application Guide
		Standard Encroachment Permit. Website- "http://dot.ca.gov/hq/traffops/developserv/permits/pdf/forms/encrchpermt_instruc.pdf " "http://dot.ca.gov/hq/traffops/developserv/permits/pdf/forms/Std._E.P._Application_(TR-0100).pdf "	Instructions for Completing Standard Encroachment Permit Standard Encroachment Permit Application
		Submit 4 full size plan sets. Plans must be folded per Caltrans Specifications. Website - "http://www.dot.ca.gov/hq/traffops/developserv/permits/pdf/publications/Folding_plans.pdf"	Folding Plans for Encroachment Permits
		Plan set contents per Caltrans requirements. Typical design-bid-build will require a Caltrans "Double Permit" (D.P.). Website - "http://dot.ca.gov/hq/traffops/developserv/p	Construction Projects Plan Set Contents

		Last Updated	June 2024
Item	**Parameter**	**Criteria**	**Notes**
		ermits/pdf/forms/plan_set_requirements.pdf "	
		A California Registered Engineer shall sign and stamp all submitted plan set sheets, except for utility plans.	-
		Detailed shoring calculations shall be submitted with supporting soils information for all excavation work in Caltrans Right-Of-Way.	-
		Utility through Caltrans R-O-W shall cross at 90° to R-O-W. Maximum 30° deviation may be considered on a case by case basis.	-
		Utility Tunnels: See Caltrans Manual Section 6.23 for details.	-
		A minimum of 10' horizontal clearance is required for all utility crossings measured from edge of utility to edge of footing / foundation.	
9	Chino Valley Independent Fire District Permit	Contact: Nielsen, Alma 14011 City Center Drive Chino Hills, CA 91709 Bus: (909) 902-5280 ext. 404 Email: anielsen@chofire.org	
		Typically takes 2 to 4 weeks for a permit. Website- "http://www.chinovalleyfire.org/DocumentCenter/View/529 "	Plan Review Application
		Submit 2 full size plan sets. Website - "http://www.chinovalleyfire.org/DocumentCenter/View/530"	http://www.chinovalleyfire.org/DocumentCenter/View/530
10	City of Chino Permit	Contacts: Hernandez, Tabitha 13220 Central Avenue Chino, CA 91710 Bus: (909) 334-3411 Email: Hernandez, Ron 13220 Central Avenue Chino, CA 91710 Bus: 909-464-0793 Email: rhernandez@cityofchino.org	

			Last Updated June 2024
Item	**Parameter**	**Criteria**	**Notes**
		thernandez @cityofchino.org	
		Typically takes 3 to 5 weeks for a permit. Website- "http://www.cityofchino.org/home/showdocument?id=8908"	Encroachment Permit Checklist
		Submit 3 full size plan sets and 1 11x17 size to Engineering Dept. Submit 1 full size plan set to Utilities and 1 full size plan to Recreation. Encroachment and traffic control in one application. Website- "http://www.cityofchino.org/home/showdocument?id=9142"	Encroachment Permit
11	City of Chino Hills Permit	Contact: Bond, Chris 14000 City Center Drive Chino Hills, CA 91709 Bus: 909-364-2758 Email: cbond@chinohills.org	
		Typically takes 3 to 12 months for a permit. Website - "http://www.chinohills.org/DocumentCenter/Home/View/358"	Encroachment Permit
		Submit 10 full size plan sets. Encroachment and traffic control in one application.	
12	City of Fontana Permit	Contact: Martinez, Graciela 8353 Sierra Avenue Fontana, CA 92335 Bus: 909-350-6522 Email: gmartinez@fontana.org	
		Typically takes 3 to 5 weeks for a permit. Website- "http://www.fontana.org/DocumentCenter/Home/View/659"	http://www.fontana.org/DocumentCenter/Home/View/659

		Last Updated	June 2024
Item	**Parameter**	**Criteria**	**Notes**
		Submit 3 full size plan sets. Website- "http://www.fontana.org/DocumentView.aspx?DID=2461"	Traffic Control Permit Application
13	City of Montclair Permit	Submit application at Engineering counter. Website- "http://www.cityofmontclair.org/civica/filebank/blobdload.asp?BlobID=3406"	Street/Lane Closure Application & Permit
		Typically takes 1 to 2 weeks for a permit. Website- "http://www.cityofmontclair.org/civica/filebank/blobdload.asp?BlobID=3410"	Encroachment Permit Information
		Submit 1 full size plan set. Website- "http://www.cityofmontclair.org/civica/filebank/blobdload.asp?BlobID=7038"	Encroachment Permit
14	City of Ontario Permit	Contact: Hunt, Susan 303 East B Street Ontario, CA 91764 Bus: 909-395-2150 Email: shunt@ci.ontario.ca.us	
		Typically takes 3 to 5 weeks for a permit. Website- "http://www.ci.ontario.ca.us/modules/showdocument.aspx?documentid=1120 "	Encroachment Permit
		Submit 3 full size plan sets and 1 11x17 size to Engineering Dept. Submit 1 full size plan set to Utilities and 1 full size plan to Recreation. Encroachment and traffic control in one application.	
15	City of Rancho Cucamonga	Apply for permits, attach documents/drawings, pay for permits and schedule inspections on-line. Register before applying. Website- "https://aca.accela.com/cityofrc/default.aspx"	http://aca.accela.com/cityofrc/
		Typically takes 3 to 6 weeks for a permit. Website- "https://www.cityofrc.us/civica/filebank/blobdload.asp?BlobID=7545"	Utility Construction Permit
		RC does not allow right-of-way work on Friday unless paid for by check 4 days in advance. Closed every Friday.	

				Last Updated June 2024
Item	**Parameter**	**Criteria**		**Notes**
16	San Bernardino County Flood Control/Public Works	Contacts: Hartmann, Brenda 825 East Third Street San Bernardino, CA Bus: 909-387-8012 Email: bhartmann@dpw.sbcounty.gov	Mish, Marty 825 E. Third Street, Room 108 San Bernardino, CA 92415-0835 Bus: 909-387-8005 Email: mmish@dpw.sbcounty.gov	
		Typically takes 5 weeks for each review. Some projects have 3-4 reviews. Website - "http://www.sbcounty.gov/dpw/floodcontrol/pdf/permitForms/PermitApplication.pdf"		Flood Control Permit Application
		Submit 4 full size plan sets. Website - "http://www.sbcounty.gov/dpw/floodcontrol/pdf/permitForms/PermitApplicationPackage.pdf" Website- "http://www.sbcounty.gov/dpw/floodcontrol/pdf/permitForms/Amendment.pdf" Website- "http://www.sbcounty.gov/dpw/floodcontrol/pdf/permitForms/coiform.pdf"		Permit Application Checklist Flood Control Permit Amendment Application Certificate of Insurance
17	San Bernardino County Transportation / Public Works Division	Contact: Gomez, Sylvia 825 East Third Street, Room 120 San Bernardino, CA 92415-0835 Bus: 909-387-8046 Email: sgomez@dpw.sbcounty.gov		
		Typically takes 2 to 4 weeks for a permit. Website - "http://www.sbcounty.gov/dpw/operations/pdf/permits/ExcavationPermits.pdf"		Application for Excavation Permit
		Submit 2 full size plan sets each of engineering and traffic control plans. Website - "http://www.sbcounty.gov/dpw/operations/pdf/permits/Encroachment.pdf"		Application for Encroachment Permit
18	SCE Permit	Contacts will vary from project to project and locations. When plans are submitted, a		Using SCE Fee-Owned Property

				Last Updated	June 2024
Item	**Parameter**	**Criteria**		**Notes**	
		Planner will be assigned. Each Planner has specific geographic locations that they service. Website - "https://www.sce.com/wps/portal/home/partners/real-estate-and-locations/secondary-land-use/!ut/p/b0/04_Sj9CPykssy0xPLMnMz0vMAfGjzOK9PF0cDd1NjDz9fd3cDBydnU1CLYxNjfydDfULsh0VAcPbRuw!/"			
		Typically takes 6 to 8 weeks for each review. Could take 12 to 24 months to obtain a consent/license. Website- "https://www.sce.com/wps/wcm/connect/7cbcdfdc-4ee6-4837-b3a8-929f7eda5205/Customer+Project+Information+Sheet_AA.pdf?MOD=AJPERES"		Customer/Project Information Sheet	
		Submit 2 full size plan sets.	Website - "https://www.sce.com/NR/sc3/tm2/pdf/1734-E.pdf"	Distribution Line Extension Competitive Bidding Letter of Understanding	
			Website - "https://www.sce.com/wps/wcm/connect/077f2032-d2ab-470b-b174-259175fe7a58/Applicant+Design+Option+Letter_AA.pdf?MOD=AJPERES"	Applicant Design Option For Distribution and/or Service Extensions Letter of Authorization	
			Website - "https://www.sce.com/wps/wcm/connect/2bca123a-c5b3-4035-8625-7f187c908d86/ConstraintsandGuidelines_AA.pdf?MOD=AJPERES"	Transmission Line Right of Way Constraints and Guidelines	

			Last Updated June 2024
Item	**Parameter**	**Criteria**	**Notes**
		Website - "https://www.sce.com/wps/wcm/connect/bd91e1c0-a8d3-40ee-91d1-01d313ea45ca/GuidelinesforStandardLicenseeImprovements_AA.pdf?MOD=AJPERES"	Guidelines for Standard Licensee Improvements
		Website - "https://www.sce.com/wps/wcm/connect/07e34800-84f8-44fd-875e-a6a18bd6695b/SecondaryLandUse-IntakeForm_AA.pdf?MOD=AJPERES"	Request for Secondary Land Use - Intake and Referral
19	Union Pacific Railroad Permit	Contact: Crawford, Kylan 1400 Douglas Street Stop 1690 Omaha, Nebraska, 68179-1690 Bus: 402-544-8536 Email: kdcrawfo@up.com	
		Typically takes 4 to 6 months for a permit/license agreement. Website - "http://www.up.com/cs/groups/public/@uprr/@realestate/documents/up_pdf_nativedocs/pdf_up_re_pipeform.pdf"	Application
		Submit 2 full size plan sets Website- "http://www.up.com/real_estate/utilities/pipeline/pipespecs/index.htm" Website - "http://www.up.com/cs/groups/public/@uprr/@realestate/documents/up_pdf_nativedocs/pdf_up_reus_exhibit_a_nonflame.pdf"	Pipeline Installation Engineering Specifications Exhibit "A" - Non-Flammable
20	City of Upland Permit	Contact: Callens, Jason 460 North Euclid Ave Upland, CA 91786 Bus: 909-931-4137 Email: jcallens2@ci.upland.ca.us	
		Typically takes 3 to 6 weeks for a permit. Website -	http://www.ci.upland.ca.us/#Building_Permits

				Last Updated June 2024
Item	**Parameter**	**Criteria**		**Notes**
		"http://www.ci.upland.ca.us/#Building_Permits"		
		Submit 3 full size plan sets.	Website - "http://www.ci.upland.ca.us/uploads/files/Permit%20-%20Supplemental%20Information%2005.20.09.pdf"	Supplemental Permit Information
			Website - "http://www.ci.upland.ca.us/#Construction_Inspections"	Construction Permit
			Website - "http://www.ci.upland.ca.us/uploads/files/Permit%20-%20Temporary%20Street%20Closure%20Application.pdf"	Permit Application - Temporary Street and Lane Closures
			Website- "http://www.ci.upland.ca.us/#Permits_/_Information"	Transportation Permit
21	US Army Corp of Engineers	404 Permit - Discharge of dredge and fill material: Website - "http://www.spl.usace.army.mil/Missions/Regulatory.aspx"		US Army Corps of Engineers
		Will require CEQA status, Dept. of Fish & Wildlife, and 401 Water Quality Certification from the Regional Water Quality Control Board (RWQCB).		
		Permit process may take 6 to 8 months.		
		Electronic forms can be downloaded from US Army Corps of Engineers (USACE) LA District website.		
22	Dept. of Fish & Wildlife	Streambed Alternation Agreement. Website - "https://www.wildlife.ca.gov/"		CA Fish and Wildlife
		If deadline is not met by F&W, a memo is issued allowing the project to proceed.		

		Last Updated	June 2024
Item	**Parameter**	**Criteria**	**Notes**
		Process may take 3-6 months.	
23	Regional Water Quality Control Board (RWQCB)	401 Water Quality Certification.	LA Regional Water Quality Control Board
		Permit process may take 3 to 6 months.	
		Electronic form can be downloaded from the RWQCB website.	
24	Chino Basin Water Conservation District	401 water quality certification	
		Permit process may take 3 to 6 months	
		Contact: David Schroeder, 4594 San Bernardino Montclair, CA 91763 Bus: 909 267 3223	Chino Basin Water Conservation District
		Takes 3-4 weeks for permit review. Website- "http://www.cbwcd.org/"	
		Submit one full size and two half size, typically.	

Inland Empire Utilities Agency
A MUNICIPAL WATER DISTRICT

Engineering Design Guidelines

Section 8- Project Management Tools

Section 8- Project Management Tools

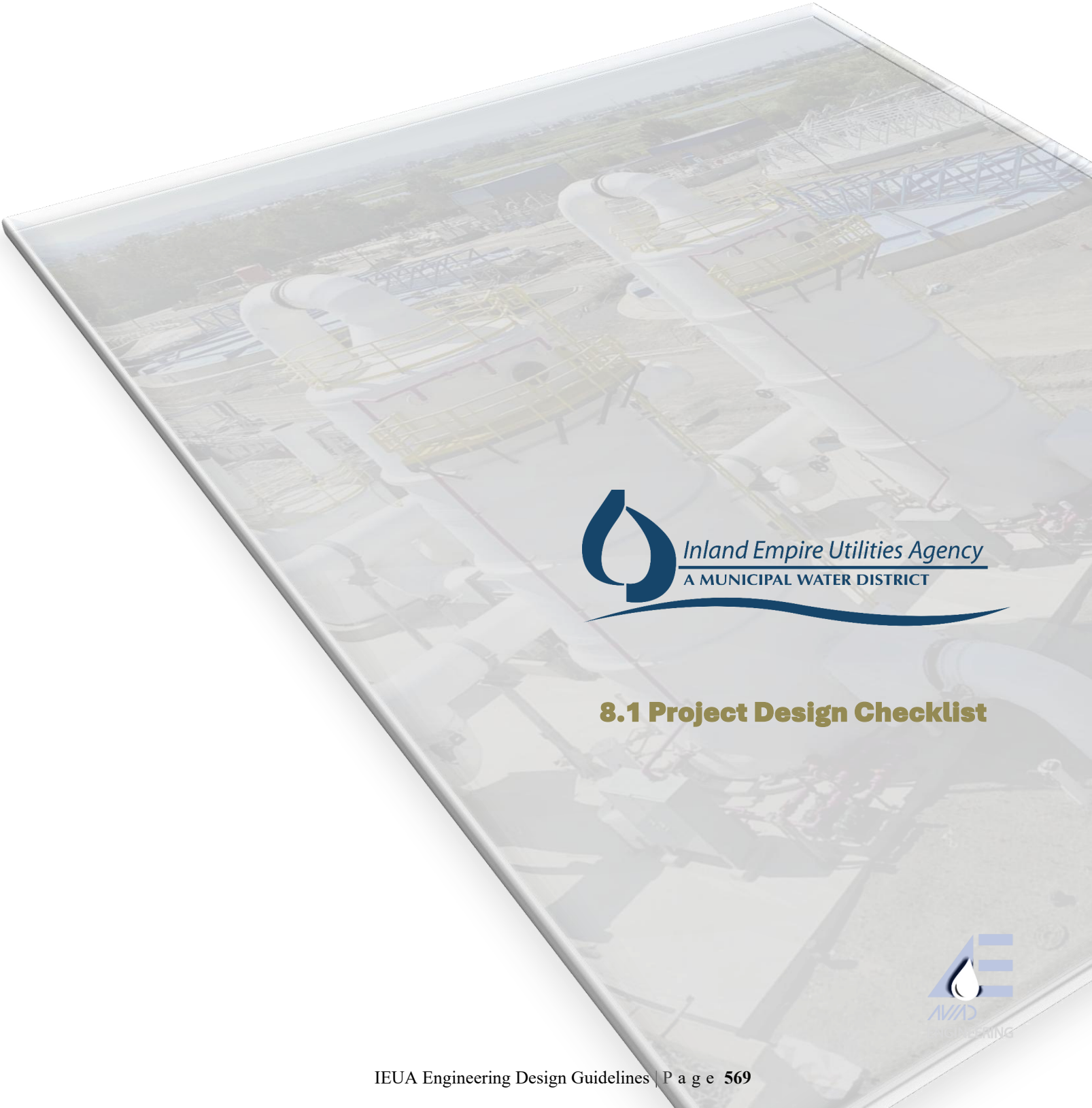

Inland Empire Utilities Agency
A MUNICIPAL WATER DISTRICT

8.1 Project Design Checklist

8.1 Project Design Checklist

ATTACHMENT M

PROJECT DESIGN CHECKLIST

PROJECT TITLE: _____

PROJECT NO: _____ **BUDGET:** _____

1)	Cost Estimate of the Construction Project within Fiscal Year/Total Project Budget	☐
2)	Funding requirements included in the Front End Specifications (SRF/Grants, etc.)	☐
3)	Consistency with funding commitments with partnering agencies	☐
4)	Ultimate build-out capacity / layout considerations	☐
5)	Design Calculations	☐
6)	CEQA / CEQA Plus / NEPA	☐
7)	Permits (See Attachment A)	☐
8)	Easements (plans detailing the easements with APN & ROW, easements recorded)	☐
9)	SCE Design Incentives process was initiated at PDR stage for the project	☐
10)	Control Narrative and Strategies (Operational Philosophy)	☐
11)	Startup Procedures	☐
12)	Work restriction within current plant / shutdown limitations / service interruption	☐
13)	Asset Inventory (New Equipment and Items to be removed)	☐
14)	Submittals Checklist	☐
15)	Potable/Recycled Water Cross Connection Considerations	☐
16)	Ventilation / Air-conditioning for electrical/control rooms & cabinets	☐
17)	QA/QC Review Date:_____ by _____	☐
18)	3D Rendition for structures	☐
19)	Conditions from sample checklist in Section 8 – Project Design of Project Management SOP	☐
20)	Conditions from Sample Plan Checklists of Exhibit 12 of Project Management SOP	☐
21)	Site visits to verify field conditions	☐
22)	Geotechnical Baseline Reports with sufficient details for construction bid (percentage of cobbles, etc.)	☐
23)	Pothole and Ground Penetrating Radar of unknown utilities	☐
24)	Retention Percentage acceptable at 5% or needs increase up to 10% (requires Board approval)	☐
25)	Limits of construction area is delineated on the plans	☐
26)	HVAC Improvements consistent with Agency requirements	☐
27)	Confined space requirements shown on drawings after consultation w/ Safety Officer	☐
28)	Electrical arc-flash requirements shown on drawings after consultation w/ Safety Officer	☐
29)	Reference to Green Book if it's not specifically called out	☐
30)	Area Classification for Electrical Installations and areas where the contractor will be working	☐

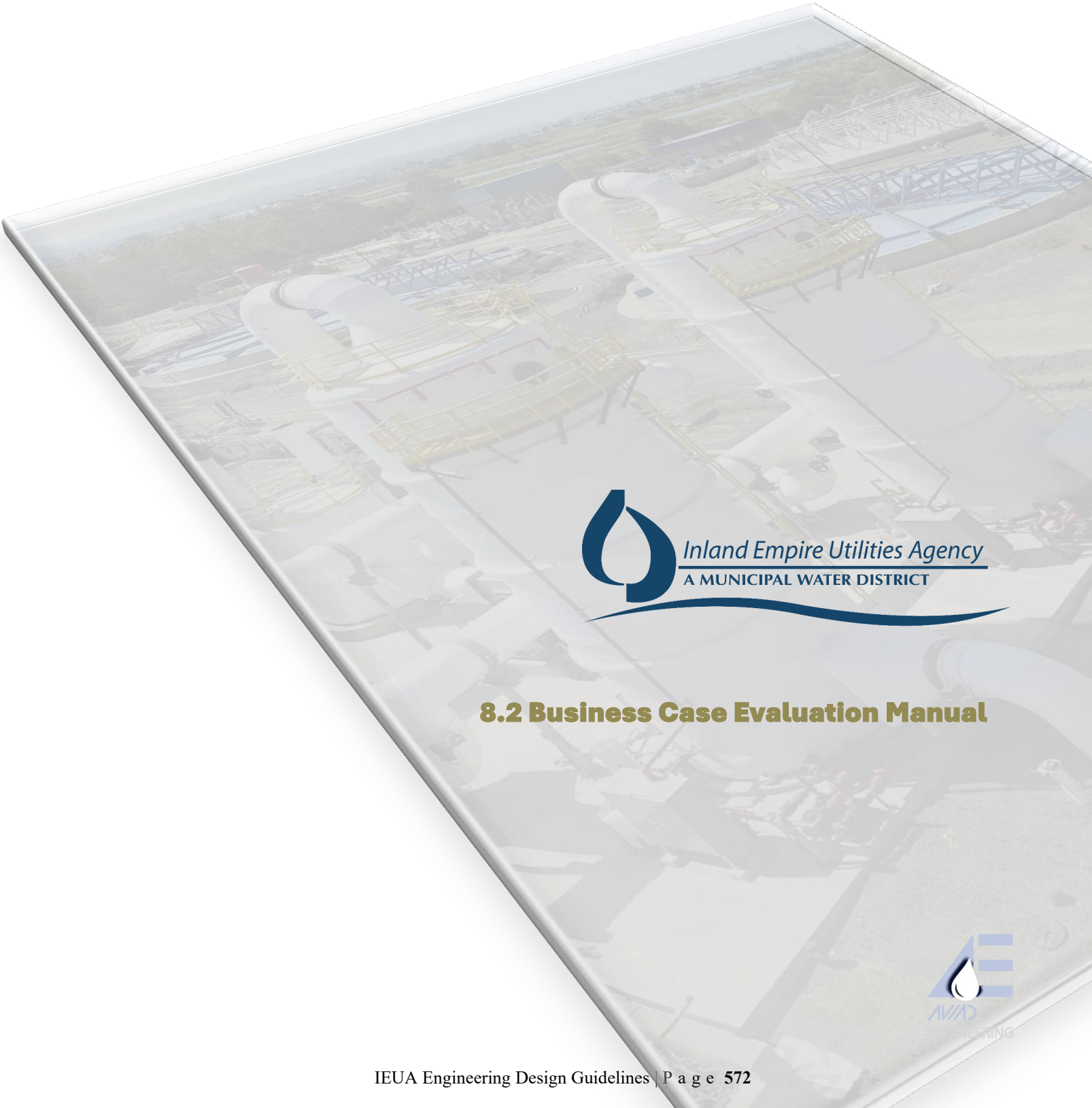

Inland Empire Utilities Agency
A MUNICIPAL WATER DISTRICT

8.2 Business Case Evaluation Manual

8.2 Business Case Evaluation Manual

Inland Empire
UTILITIES AGENCY

The Business Case Evaluation: A Hands-on Manual

Table of Contents

Preface: About this Manual 4

1. Introduction 5
   1.1 What is a BCE? 5
   1.2 How is a BCE Done? 6
   1.3 What does the BCE have to do with Asset Management? 9
   1.4 What is Your Role in the BCE Process? 10

2. Basic BCE Concepts: Costs and Benefits 12
   2.1 The Benefit/Cost Analysis 12
   2.2 Internal Costs 14
   2.3 Environmental and Social Costs 16
   2.4 Risk Costs 18
   2.5 Benefits 22

3. Life-cycle Benefit/Cost Analysis: Using the NPV Tool 24
   3.1 Entering the basic data 25
   3.2 Entering the data for each alternative 26
   3.2 Risk Premiums and Sensitivity Adjustments 28
   3.4 Housekeeping 31

4. A Real Life Example: Pump Station 64 32
   4.1 Define the Drivers 32
   4.2 State the Problem 32
   4.3 Formulate Alternatives 33
   4.4 Analyze Alternatives 35
   4.5 Recommend and Report 38
   4.6 Observations on the Team's Work 38

Appendix A: Departmental Policy on Business Case Evaluations....40
Purpose....40
Roles and Responsibilities....40
Qualifying Projects....41
Key Factors for Recommending Project Approval....41
Initial Project Proposal for Consideration....42
Initial Committee Consideration....43
More Complete BCE's....43
BCE Validation....44
Final Consideration....44
Project Approvals And Associated Coordinations....45
Approved Project Tracking....45
Supporting Activities....45

Appendix B: Costing Capital Outlays and Labor....46
Costing Capital Outlays....46
Costing Labor....47

Appendix C: Present Value....49
PV Basics....49
The Value of Deferral....51
Annuities....53

Appendix D: Discount Rates....59
Other Approaches to Discount Rates....59
Should Nominal or Real Values be Used?....60
Including a Risk Premium in the Discount Rate....62

Appendix E: Fitting your Capital Program to your Customers' Needs....66
Abstract....66
Background....66
Introduction to the Business Case Evaluation....68
Background to the BCE: The UDCRIP....70
Do Our Customers Need this Project?....71
Alternative Approaches to Solving the Problem....71
Results of the Analysis....75
Lessons Learned....77
References....78

List of Figures

Figure 1: Process Flow for a BCE 7
Figure 2: Calculation of Risk Cost 18
Figure 3: NPV Tool, Example of Basic Data Entry, Summary tab 26
Figure 4: NPV Tool, Example of Alternative Data (partial) 27
Figure 5: Partial NPV Tool, Example of Data Entry with Sensitivity Adjustments 28
Figure 6: NPV Tool, Analysis of the Value of Deferring a Plant 29
Figure 7: NPV Tool, Sensitivity Analysis of Capital Cost Growth 30
Figure 8: Partial NPV Tool Data Entry for Alternative 2, PS 64 Analysis 37
Figure 9: Life-cycle Costs for Remaining Alternatives, PS 64 Analysis 38
Figure 10: Sample Labor Hour Productive Time Analysis 47

List of Examples

Example 1: What does an upgrade cost? 6
Example 2: Tearing up the neighborhood. 13
Example 3: Ownership costs 101: Pop quiz. 15
Example 4: There will be a short delay... 17
Example 5: A failure-prone pump. 18
Example 6: A risky pipe. 19
Example 7: How often to clean? 19
Example 8: Doing it before it has to be done. 21
Example 9: Not safe to swim. 23
Example 10: An unexpected alternative. 34
Example 11: The real cost of maintenance. 47
Example 12: The grasshopper and the ant. 49
Example 13: A bad investment. 50
Example 14: In praise of procrastination. 51
Example 15: Is longer life worth it? 52
Example 16: Investing to avoid costs. 54
Example 17: Investing for increased sales. 55
Example 18: Is longer life worth it? (revisited from Example 15) 56
Example 19: How often to clean? (revisited from Example 7) 57
Example 20: More gas is good! 58
Example 21: A life decision. 60
Example 22: Real versus nominal: Does it matter? 62
Example 23: But will it really work? 64

PREFACE: ABOUT THIS MANUAL

This manual was prepared by Brown and Caldwell to help staff of public water/wastewater agencies prepare "business cases" for proposed capital projects. Using the approaches and techniques described in this manual, staff can put projects forward with assurance, knowing that their proposals are in the best interest of their utility's customers, the environment, and the community at large.

The manual was originally prepared for the City of San Diego and is used there in both training and the actual performance of business case evaluations, which are required for all significant new projects.

The manual is written in four major sections and five appendices:

- The four major sections, numbered 1 through 4, introduce the concept of business case evaluations (BCEs), delve into the possible costs and benefits of projects, introduce the departments' main analytical tool (the NPV Tool), and then describe an actual BCE performed jointly by San Diego water/wastewater staff.

- Appendix A presents the draft policy of the San Diego Metropolitan Wastewater Department requiring BCEs for proposed projects.

- Appendix B shows ways of costing capital outlays and labor, which are factors in many or most BCEs.

- Appendix C introduces concepts of present value, which is used for life-cycle costing in BCEs.

- Appendix D expands on Appendix C by discussing discount rates.

- Appendix E, a paper presented at the AWWA/WEF Joint Management Conference in 2004, describes in some detail a BCE performed at another agency.

It is hoped that this manual will prove valuable to staff who prepare BCEs. The manual will be updated from time to time. Any suggestions for improvements or additions should be given to your agency's Asset Management Coordinator.

1. INTRODUCTION

This manual provides guidelines for preparing business case evaluations (BCEs). BCEs are required for most new projects undertaken by the departments.

Why? Simply because your department wants to make sure that all its expenditures are in the best interest of its customers, the broader community, and the environment. The BCE is crucial to making sure this is the case.

The BCE is normally made a part of normal business practices. At San Diego's Metropolitan Wastewater Department, for example, the BCE process works like this:

- A division or a person has a project that they believe deserves evaluation. A one-page "project abstract" is prepared, countersigned by the divisional Deputy Director, and submitted to the Asset Management Executive Committee.

- If the Committee judges the proposal worthy of further consideration, it may direct that a BCE be performed.

- Depending on the results of the BCE, the Committee may recommend to the Director that the project be implemented.

A full description of this process can be found in Appendix A, *Departmental Policy on Business Case Evaluations*.

1.1 WHAT IS A BCE?

Simply put, the BCE is a process to evaluate a perceived need and determine how best to address this need considering financial, environmental, and social impacts. Although the BCE will often be highly quantitative, its ultimate purpose is to support a business judgment decision on a proposed project. In preparing a BCE, you are helping the ultimate decision makers make that business judgment: Do your customers need this project? Is this project the best approach to solving a real problem? How do you best balance the costs of the project against the expected benefits? What risks are involved, and what are their real magnitudes and gravity?

Yes, this may seem to be a lot of work. But consider this: Every time your department issues bonds for a new project, it is effectively mortgaging the homes of all its customers for twenty to thirty years, adding not only the debt service for the bonds to their real monthly expenses but usually exposing them to new ongoing running costs as well. This is a serious matter for

your customers and deserves serious consideration. That is why your department requires this depth of consideration before approving new projects.

Example 1: What does an upgrade cost?

A wastewater utility with 245 thousand accounts is considering a major wastewater treatment plant upgrade costing $35 million, to be financed by 30-year bonds. Annual running costs at the plant will increase by $3.4 million annually.

Let's do the numbers: The impact on the typical residential customer will be about $24 each year for 30 years, or $2 a month

	$35,000,000	bond issue
	30	year bonds
	5.8%	interest rate
	$2,475,068	annual debt service
add:	3,400,000	annual O&M cost
	$5,875,068	total annual cost
divide by:	245,000	number of accounts
	$23.98	annual cost per account
or,	$2.00	monthly cost per account

The O&M portion of this $2 per month will increase with inflation. Of course, once the department commits to the upgrade, the impact will be irreversible.

The utility described in this example is a real one. Its planned capital program will cost well over $100 million a year for the next several years. The importance of controlling capital expenditures, and of making sure that they fund the right projects at the right time, is obvious.

1.2 How is a BCE Done?

A BCE can be done by a single person but will usually require significant input from in-house sources in planning, design, finance, operations, and/or maintenance. More often, and almost always for significant projects, the BCE will be done by a cross-functional team providing expertise in all or most of these areas. This cross-functional team is usually referred to as an "Expert Panel" or simply a "BCE Team." The team may need to meet several times to completely consider and finalize a BCE.

The person or team responsible for the BCE will usually need a lot of information, some of which will be easy to obtain and some more difficult. Sources to consider, in order of likely ease of access, include:

- This manual
- Your agency's Asset Management Coordinator

- Previous BCEs, cost dictionary, standards, etc., available in your agency's Asset Management Library
- In-house "experts" throughout your department
- Library materials and the Internet
- Outside subject matter experts.

With regard to the mechanics of a BCE, there is no single "formula" that fits every case. Every project is in some way unique and has its own arguments for existence. However, most BCEs proceed in five steps. Here they are, keyed to the sections of this report where you can find real-life examples.

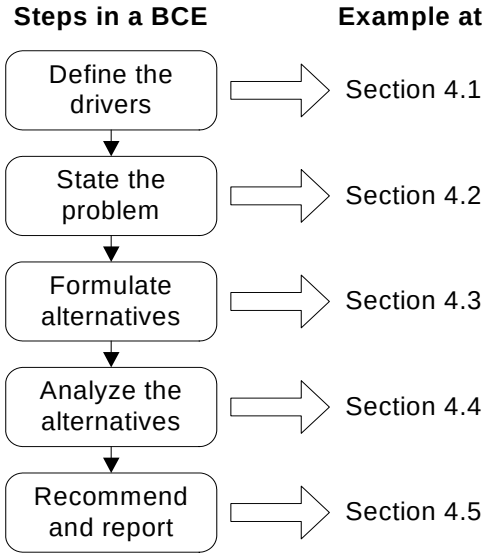

Figure 1: Process Flow for a BCE

Let's look at each of the steps in a bit more detail.

1. *Define the drivers*—First, define the "drivers" for the project. The primary drivers for a project may include safety and health requirements, environmental mandates, system capacity limitations, system reliability or other service level issues, efficiencies (cost savings), and/or aesthetic considerations.

   Without a clear definition of the drivers, it is easy to lose focus. If that happens, the problem statement and subsequent alternatives may drift away from directly addressing the original drivers for the project.

   ⇒ *See an example of defining the drivers for a project in Section 4.1.*

2. *State the problem*—Clearly state the problem that gives rise to the need for the project. This is a critical step because the way you think of a problem may limit the solutions you consider. Try to "step back" from the situation to understand the problem in a way that permits the formulation of creative alternative approaches to a solution.

   Stating the problem is probably the most critical step in the BCE process. It's easy to get it wrong! If this happens, the ultimate solution may not be the best one to address the problem that *really* exists.

   ⇒ *See example problem statements in Section 4.2 and also in Appendix E.*

3. *Formulate alternatives*—Define alternative ways of addressing the problem. Again, this is a critical step and it is important to have an open mind. If the BCE is being supported by a cross-functional team, the alternatives are usually developed in a brainstorming session. Nothing is left off the table at this point! As a last step in the alternatives formulation, it may be necessary to determine whether some alternatives have "fatal flaws" in order to narrow the scope of the subsequent analysis.

   You will be amazed at the number of reasonable alternatives that exist to solve a problem once it is clearly stated. Don't shortcut this process! Often the best alternative is not immediately apparent and, if the formulation process ends too soon, may never be raised at all.

   ⇒ *See examples of formulating alternatives and of fatal flaw analyses in Section 4.3 and also in Appendix E.*

   ⇒ *See an example of a winning alternative that was almost missed in Example 9.*

4. *Analyze alternatives*—Each remaining alternative is evaluated by a life-cycle present value benefit/cost analysis, considering not only budgetary impacts but also risks, environmental considerations, and societal costs.

   ⇒ *Descriptions of real-life alternatives analyses can be found in Section 4.4 and also in Appendix E.*

   Much of this manual is about the analysis process, but two key points are:

   - "Life-cycle" means simply that benefits and costs are considered over a long period of time, typically twenty years or more. To the extent possible these benefits and costs are expressed in dollar terms. Risks, if present or if reduced by an alternative, are likewise expressed in dollar terms.

     ⇒ *Benefits and costs, including risk costs, are discussed more fully in Section 3.*

- "Present value" means that the analysis takes the time value of money into account. Present value analysis is universally used by private companies to make investment decisions

  ⇒ *An introduction to present value analysis can be found in Appendix C. Appendix D has a discussion of discount rates, which are critical in present value analysis.*

  ⇒ *Present value analysis is taken care of you automatically if you use the department's* NPV Tool*, discussed in Section 3. Be sure to see your Asset Management Coordinator for the right numbers to use in your analysis.*

5. *Recommend and report*—All you need to do now is to summarize what you've done and make your recommendation. Remember that even with the best will and intent, you will still need to exhibit quality and objectivity in your presentation if you are to convince others.

   ⇒ *An example summary and recommendation can be found in Section 4.5.*

   Of course, you will also need a report to document your work. A typical BCE report is organized in accord with the five steps here, with the addition of an Executive Summary up front. The report should be clear, to the point, and *concise*.

   ⇒ *Example BCE reports are available in your Asset Management Library.*

More on all this later. For the time being, suffice it to say that *any* BCE is done well if it finds the best solution to a problem and presents that solution convincingly and, of course, fairly.

1.3 WHAT DOES THE BCE HAVE TO DO WITH ASSET MANAGEMENT?

The fundamental goal of asset management is to provide the customer with the required (and specified) level of service at the lowest possible life-cycle cost. It is almost reflexive in asset management to make sure, before making any expenditure, that this goal is being served—which means the benefits of the expenditure must be greater than the cost. And a BCE is, in the end, simply a benefit/cost analysis.

Several other aspects of asset management are reflected in a BCE:

- Asset management draws no distinction between "capital" and "operating" costs. Neither does a BCE. A dollar is a dollar and, regardless of which budget you take it out of, its source is always the same—the customer's pocketbook.[1]

- Unlike a private business, whose primary goal is to maximize the wealth of its owners, a public agency practicing asset management aims at providing services at the lowest *total* cost to the community. Thus it aims to optimize the overall quality of life for its customers considering financial, environmental, and societal impacts of its actions. These three factors are commonly known as the "triple bottom line."

- The BCE, in accord with principles of asset management, always takes a long-term view of the costs and other impacts arising from asset decisions. This means that decisions must give the best results as seen from today's viewpoint, but with full consideration of tomorrow's impacts including future replacement and refurbishment needs. This assures sustainability of the infrastructure today and tomorrow both.

Users of this manual with an interest in the broader field of asset management are referred to the *International Infrastructure Management Manual*, which can be ordered on-line at http://www.ingenium.org.nz/.

1.4 WHAT IS YOUR ROLE IN THE BCE PROCESS?

As the preparer of a BCE, either on your own or in a team, your role is simple—to advise the department on the best solution to a problem affecting customers, the community at large, or the environment. If your business case is persuasive, chances are that neither the Asset Management Executive Committee nor the Department Director is going to spend too much time second-guessing your analysis. So the responsibility is clearly yours to do a good job because your recommendation may impact the spending of millions of dollars of your customers' funds.

What does it mean to "do a good job?"

- *Be careful*—Make sure you understand a problem thoroughly before you try to solve it. Stand well back from the problem and ask, "Does this problem really need a solution? Will anything you do really make a perceptible difference to your customers?" Be sure you define the problem in a way that allows consideration of non-construction

[1] This is true even if the money for a project is borrowed (that is, bonds are issued). The present value of debt service payments will always be exactly equal to the amount borrowed when discounted at the borrowing rate. Since most utilities use their borrowing rate as the discount rate, the way a capital project is financed makes no difference in a life-cycle cost analysis.

alternatives, other ways of configuring the system, and other non-obvious approaches to an ultimate solution.

- *Be creative*—Keep your mind open to all alternatives, no matter how far-fetched. Sometimes a solution that seems absurd needs only a slight twist, or one additional feature, to generate that "Aha!" experience.

- *Be objective*—Don't become overly attached to any one solution, even one that you thought of yourself. Be even-handed and consider benefits, costs, and risks in a consistent way across all possible solutions.

- *Be detailed*—Make sure you have captured all likely costs. You probably won't the first time around, or even the second. Be sure you talk with people from E&C about capital costs and people from O&M about other costs of ownership.

- *Be collaborative*—Depend on your Asset Management Coordinator to help with your BCE. If you are assigned to a team, learn from the other team members to make yourself more effective in the future. In any case, seek out the subject matter experts in the department and elsewhere in the city and use their expertise.

- *Be persuasive*—When you're finished, you will have done a lot of work that will benefit your customers, the environment, and the larger community. Don't let it go to waste. Present your work simply but effectively. Don't overstate your case, but if you are convinced you've found the best solution – say so clearly.

2. BASIC BCE CONCEPTS: COSTS AND BENEFITS

This chapter discusses some of the basic concepts involved in the BCE. None of these are difficult to understand, but some can be quite hard to deal with in the real world. So here we go.

2.1 THE BENEFIT/COST ANALYSIS

Every BCE is, ultimately, a benefit/cost analysis. What is the benefit of the project to your customers, your community, and the environment? What is the cost? In the final analysis, do the benefits outweigh the costs?

Simply said, but often not so simply done. Many proposed projects have benefits and costs that are not easily quantifiable. These situations usually fall into one of two categories:

1. The project (or some solution) is needed because of policy or regulatory mandates. Examples might be spills occurring due to a known system problem, an immediate threat to safety or public health, the project is already irreversibly agreed, and so forth. In such cases, there really isn't any question that something needs to be done and, in fact, the path forward may be well defined and can't be changed. In such cases, the BCE may be very cursory—but still, you should be alert to better ways to implement the project in cases where there is some flexibility.

2. You can estimate some (but not all) of the benefits and/or costs. This is a very common situation. In such cases, you need to estimate the benefits and costs where you can, thus simplifying the decision in the final analysis. This is called a "Reasonable Person" test.

Example 2: Tearing up the neighborhood.

The Water Department has already validated the need to increase the diameter of about eight miles of pipe in a certain area of the city. With normal excavation, the job will cost $140 per foot, take three months, and cause traffic delays, noise, and other disruptions along the residential and arterial streets affected. Less disruptive approaches (tunneling or some other technology) will cost $225 per foot and effectively eliminate the societal impacts. There are an average of 85 homes per mile of pipe in the affected area.

Let's do the numbers: At the known per-foot costs, it will cost $3.6 million more for the non-disruptive approach than for normal excavation. At 680 homes, this works out to $5,280 per home for the three-month period, of $1,760 per home per month, to avoid the disruption.

	8	miles of pipe		
equals:	42,240	feet of pipe		
	$9,504,000	cost of tunneling at	$225	per foot
less:	5,913,600	cost of excavating at	$140	foot
	$3,590,400	added cost of tunnelig		
divide by:	680	number of homes affected		
	$5,280	added cost per home		
divide by:	3	months disruption avoided		
	$1,760	montly cost per home of avoiding disruption		

Would the average homeowner be willing to pay $1,760 a month to avoid having the street in front of his/her house torn up for three months? A Reasonable Person might say "probably not," in which case the department should drop the non-disruptive approach and settle on normal excavation. In any event, some simple analysis on your part has sharpened the problem's focus dramatically and given decision-makers a better handle on the best solution.

Sometimes this approach can yield startling results, as in the case of the water utility that planned some system improvements to increase the water pressure for a small group of customers whose pressures were somewhat under the levels set by policy. Upon "doing the numbers," it was found that the utility would be spending $40 thousand per customer to solve a problem that nobody had ever complained about. Somebody suggested that a better approach would be to pay each affected customer $10 thousand in return for a promise not to complain for twenty years!

This discussion has introduced the concept that there are other costs to consider beyond those that affect your departmental expenditures—a good segue to the next few topics: Internal costs, environmental and social costs, and risk costs. The "benefit" part of the benefit/cost analysis will be addressed at the end of the chapter.

2.2 INTERNAL COSTS

Direct costs are those that impact your utility's spending. These are the costs that "traditional" economic analysis focuses on. Without going into too much detail, here is a short list of internal costs that may be considered when making asset decisions:

- Asset acquisition costs including direct labor for planning, design, construction management, project management, and so forth. Acquisition costs may also include consultant or contractor fees, permits, an allocation of internal overhead, legal costs, contingencies, and so forth. Finally, acquisition costs include the actual delivered cost of the facility or asset being acquired as well as the cost of land if applicable.

- Annual maintenance and operation costs including direct labor, chemicals, energy, parts, rolling stock and other equipment costs, outside services such as security or janitorial, etc.

- Reinvestment to sustain the asset's functionality. This category of costs, which is often ignored in traditional analysis, includes long-interval but sometimes costly activities such as structural rehabilitation, new roofs, motor rewinding, pump impellor and bearing replacement, interior coating and floor repairs (*e.g.*, steel water reservoirs), landscape renovation, cleaning or inspection (*e.g.*, pipes), permit renewals, and so forth. Also, because your period of analysis may be thirty years or more, this category of cost may include replacement of sub-assets. For example, if you are analyzing the cost of a pump station over thirty years, you may want to assume that the electrical controls, motors, and pumps (at least) will need to be totally replaced at least once within that time frame.

If you are new to the BCE process, you can expect some difficulty identifying all the direct costs of asset ownership. Your Asset Management Coordinator can help by supplying a constantly-updated list of cost categories that have been developed in prior BCEs, in some cases including actual costs that you can adapt or use directly.

There are some other kinds of internal costs that you might expect when analyzing a project but can't pinpoint the timing. Such costs include items such as regulatory fines and lawsuit settlements. These are normally treated as risk costs and addressed further below.

Example 3: Ownership costs 101: Pop quiz.

A BCE Team is estimating the life-cycle costs of a planned water pump station. It believes the total facility life will be 40 years. The annual running costs it has identified are energy, chemicals, and labor for preventive maintenance.

Question: Can you think of at least five other categories of annual running costs the pump station might incur?

For longer-interval reinvestment (R&R) costs, the team has identified the likely need to replace the pumps at 20 years.

Question: Can you think of at least three other types of R&R costs that might be expected during the life of the pump station?

2.3 ENVIRONMENTAL AND SOCIAL COSTS

Because your department is a public agency, your owners are your customers. This means that you have to consider all the ways your department affects the community at large. The bills you send out are only one of the ways you impact the community. Others include:

- As seen in Example 2, every time you need to dig up the road you are negatively impacting the community. This applies in all cases—for example, in the case of a planned pipe replacement as well as emergency excavation for a collapsed pipe.

- Spills may have both environmental and social impacts. These are, of course, a major area of concern for any wastewater agency. A whole host of asset decisions, including almost all pipe replacement decisions, depends on assessing the risk of spills.

- Failure to provide sufficient capacity may lead to spills, water use restrictions or, in some cases, connection moratoria. In the latter case, there may be damage to the economic viability of the community.

- Spills, failure to meet mandated effluent standards, sub-par water quality, and other situations may result in fines that the community must pay in addition to other social costs.

Because you want to minimize the *total* impact of your department's operations on the community, you need to consider *all* these costs in your BCEs. But how do you get the numbers? Well, there are several ways. In order of priority:

1. Some research has already been done on environmental and social costs, mainly by economists. An Internet search may yield some well-founded estimates of the types of costs you are interested in.

2. Your department may have developed its own cost estimates during past BCEs. You should check with your Asset Management Coordinator to see if past work can support your current needs.

3. You can put together your own "Expert Panel" of people you consider wise and well informed and see if the group can generate a reasonable consensus estimates of the costs you need.

4. Finally, you can leave the cost unquantified and depend on the "reasonable person" approach as shown in Example 2 above.

If you choose the third approach and find some success, be sure to alert the Asset Management Coordinator so that the benefits of your work will be available to help others.

Remember that in many cases there are no right or wrong answers, just the best thinking of smart people like yourself. Don't be afraid to blaze trails for others!

In summary, you need to consider all the costs that your project is expected to cause, or as is often the case, to avoid.

Example 4: There will be a short delay...

Your department plans to replace two miles of pipe along an arterial. The direct costs of pipe replacement will be $120 per foot. The project, done by trenching, will take 180 days. 200 cars use this arterial, on average, each hour. The average traffic delay will be five minutes. Your Asset Management Coordinator tells you that the community cost of a traffic delay is $20 for each car delayed for one hour.

What is the real cost of the project, per foot, including both direct and traffic delay costs?

Let's do the numbers. 864 thousand cars will use the arterial during the 180-day project. The total delay will be 72 thousand car-hours. At $20 per hour, that's $1.44 million in community costs. Dividing by total footage, that works out to $136 per foot.

	180	days, project duration
equals:	4,320	hours duration
times:	200	cars per hour
	864,000	total cars affected
times:	5	minutes delay per car
	4,320,000	total delay-minutes
divide by:	60	minutes per hour
	72,000	total delay-hours
times:	$20	cost per delay-hour
	$1,440,000	total delay cost
divide by:	10,560	feet (two miles of pipe)
	$136	delay cost per foot

So the total cost of the project (so far) is $120 per foot in direct costs plus $136 in delay costs, or $256 per foot. This is over twice the project budget. And we haven't yet considered the costs to homeowners and businesses along this two miles of arterial street of disruption, inconvenience, and so forth arising from the excavation!

2.4 RISK COSTS

In considering costs, whether direct, social, or environmental, you will need to remember one thing: Most untoward events that generate these costs happen randomly. That is, you may *expect* such events to occur but can't be sure where or when they will occur. This means that you are living and working in an environment of risk.

How do you take risk into account in your BCE? There are several approaches, the best of which is to consider risk an inseparable part of asset ownership, and *risk cost of ownership* a real component of overall asset ownership costs.

Dealing with risk as an annual cost: Risk cost is simply the product of the expected frequency of asset failure and the consequence of failure:

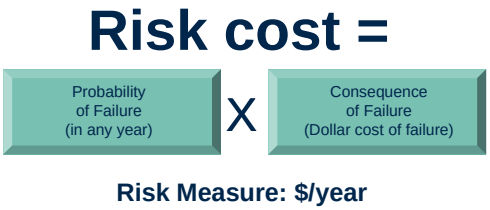

Figure 2: Calculation of Risk Cost

Example 5: A failure-prone pump.

A water pump in a treatment plant of a certain type and age can be expected to fail unexpectedly every two years. The likely cost of each failure, including impacts on other equipment and excluding normal O&M, is $2,000. What is the risk cost of ownership?

Let's do the numbers: The risk cost of ownership of this pump is 0.5 (annualized frequency of failure) times $2,000 (cost of a failure), or $1,000 per year.

Frequency:	0.5	failures per year
Consequence:	$2,000	cost per failure
	$1,000	annual risk cost

In calculating cost of ownership for this pump, you would add this $1,000 to the expected annual O&M costs and possibly other items to arrive at a total annual cost of ownership.

Risk cost can also be applied to external consequences of failure.

Example 6: A risky pipe.

There is a sewer pipe in poor condition that is expected to fail within ten years, probably causing a small spill with an estimated a social/environmental cost of $15,000.

Let's do the numbers. The risk cost of ownership of this pipe is 0.1 (one failure in ten years) times $15,000, or $1,500 per year.

Frequency:	0.1	failures per year
Consequence:	$15,000	cost per failure
	$1,500	annual risk cost

This number can be used in your benefit/cost analysis of replacing the pipe.

When you think about risk in this way, you are able to make a sound judgment on how much your department should spend to avert the risk. The principle is that the benefit/cost ratio should be above 1.0; that is, *you should spend no more to avert a risk than the risk is worth*.

Example 7: How often to clean?

A 200-foot segment of 8-inch VCP serves the sewer needs of a suburban street. Given its age and past experience, the chance of unexpected failure of this pipe segment within the next ten years is about two percent. Internal and community costs of an unexpected failure of this type of sewer, over and above the cost of a planned replacement, is $50 per foot, or $10,000—and this assumes that the entire segment would need to be replaced. How often should your department CCTV this pipe if CCTV inspection costs $1.25 per foot?

Let's do the numbers: The probability of structural failure of this pipe segment in any one year is 0.1 (once in ten years) times 0.02 (two percent chance), or 0.002. The cost of failure is $10,000. So the risk cost of ownership arising from structural failure is $20 per year.

The cost of averting the unexpected failure is 200 feet times $1.25 per foot or $250. So a reasonable CCTV frequency is 12.5 years ($250 divided by $20 per year), because then you are spending $250 to avert a total of $250 in risk costs.

	2%	ten-year failure probability
divide by:	10	years
	0.2%	one-year failure probability
times:	$10,000	failure cost (consequence)
	$20	annual risk cost
divide into:	$250	CCTV cost (avoids the risk)
	12.5	years of avoided risk cost needed to cost-justify CCTV

If the inspections were more frequent, you would be paying more than the risk is worth.

This example is, of course, a bit simplistic in that it ignores the role of CCTV in supporting the cleaning program.[2] However, a value can be placed on that as well and built into the analysis.

Dealing with risk qualitatively: Sometimes it is difficult to handle risk in a purely quantitative manner. In such cases, risk can be dealt with by informed judgment or by sensitivity analysis. If the latter, it is helpful to evaluate risk from several standpoints, for example:

- **Benefit risk**—Alternative won't fully achieve planned ancillary benefits.
- **Capital cost risk**—Alternative will cost more to implement than expected.
- **Running cost risk**—Alternative will cost more to own after construction than expected.
- **Technical risk**—Alternative won't work, or won't work sufficiently well.
- **Customer service risk**—Alternative won't totally solve the problem, or it may create new problems (spills, odors, etc.).

The first three types of risk can be dealt with by sensitivity analysis. For example, you might say, "I think the capital cost of this alternative is hard to nail down. How much could the capital cost increase before it becomes the second-best instead of the best alternative?" The NPV Tool used by the department supports this type of sensitivity analysis, allowing the evaluation of BCE results as affected by capital cost, running cost, and benefit risks.

[2] The example also fails to take into account the time value of money. This is remedied in Example 19 in Appendix C, where we revisit the same situation using an annuity calculation.

Dealing with risk via the "Reasonable Person" test: In many cases it is difficult to quantify risk and, in fact, it may be unnecessary. You can deal with many situations by "working backwards" and isolating what the cost of a risk would have to be to justify a capital expenditure. What you are aiming for is a simple question that has a "yes" or "no" answer to which a Reasonable Person might respond.

The example below shows how this idea was applied when considering whether or not to move a major capital project forward by six years. This is the same type of test applied above to social disruption caused by excavation for pipe replacement in Example 2, except that here risk cost is incorporated.

Example 8: Doing it before it has to be done.

A major trunk water main, supplying water to 100 thousand mostly residential accounts, has a river crossing. It is subject to damage in a 200-year flood and repairs would take two to three weeks. Growth in the area means that a buried duplicate main, estimated at $3.4 million, will be required in six years time.

Some direct benefits of building the new main now have already been identified, but the cost still outweighs the benefits by $1.2 million. In other words, the social benefits of early construction need to be at least $1.2 million to justify building the buried main now.

The risk is that 100 thousand accounts will be without water for a period of two to three weeks due to a 200-year flood. The question is whether bringing forward the main duplication by six years and negating the flood risk for that period has a social benefit worth more than $1.2 million.

Let's do the numbers: The avoided social risk needs to be $200 thousand annually to justify spending $1.2 million to avoid this risk for six years. So the total social consequence of losing the existing main in a 200-year flood needs to be $40 million ($200 thousand a year times 200 years).

That consequence, $40 million, is equal to $400 per account given that 100 thousand accounts will be affected.

	$3,400,000	cost of main replacement
less:	2,200,000	benefits already identified
	$1,200,000	add'l benefits needed to justify replacement
divide by:	6	years replacement brouight forward
	$200,000	add'l benefits needed per year
times:	200	years (interval between major storms)
	$40,000,000	add'l benefits needed over the risk period
divide by:	100,000	number of accounts potentially affected
	$400	add'l benefits needed per account

To put this $400 per account in perspective, a customer without water for a two or three week period would need to depend on bottled water for drinking, cooking and personal hygiene. Laundry functions would cease as facilities in the region would be closed. Sewerage services would cease, creating considerable disruption and potential health problems. Schools would likely close. Many

commercial premises, and all food establishments, would close. Many people would choose to relocate for the duration of the disruption, some at considerable cost.

In addition to the domestic impacts outlined above there would be impacts to varying extent, on industry with associated job losses, and on hospitals, of which there are six including a major regional hospital. There would also be likely operational impacts on the nearby major power station.

This, then, is the simple question for the Reasonable Person: Will the average customer incur costs or losses worth more than $400 through having no water for two to three weeks? The Reasonable Person would probably say, "Yes." If so, the new main should be constructed now, six years before it will be required for capacity reasons.

(This example is based on a case study by Peter Buckland of Hunter Water, Australia.)

2.5 BENEFITS

In the public utility world, we are used to thinking of projects primarily in cost terms. In the private sector world, this would seem very strange. In that world, if somebody wants to spend money on a project, the idea will be very difficult to sell unless the *benefits* are clearly identified, quantified, and shown to generate a financial return.

In the public utility world, though, benefits are rarely defined with any rigor. A common pattern is to gather together all the projects that have been proposed each year, prioritize them in terms of perceived importance or urgency, and approve the "top of the list," cutting off the list at some predetermined spending limit.

The idea of the BCE, of course, is to move to an alternative approach. If you can fully define the benefits of a project as well as its costs, then you can know whether the project is worth doing—not just whether it is more or less important than some other project. The departments' decision to require BCEs on new projects is a signal that they are moving in this direction.

Having said that, what kinds of benefits might your projects have? Here are a few:

- *Direct cost savings*: A new kind of pump might requite less preventive maintenance than the pumps you currently use. The avoided labor cost is a benefit because it can be reflected immediately in your expenditures.

- *Indirect cost savings*: Another new kind of pump might have an expected life of 30 years, longer than your current pumps. This is also a benefit that can be measured, even though it won't have an immediate impact.

- *Reduced environmental cost or risk*: Investing in cleaning sewers in a particular area may reduce the incidence of spills. If you know the direct and social costs of the spill volumes expected and can estimate the current and prospective spill frequencies, you can establish the benefit quite nicely.

> **Example 9: Not safe to swim.**
>
> Your department is evaluating a major system upgrade in a coastal community plagued by spill-related beach closures.
>
> *Questions*: What will be the primary benefit of the upgrade? How might you attempt to quantify the value of this benefit?

- *Reduced social costs*: As mentioned in Example 2, above, tunneling techniques can reduce the social costs of traditional excavation when replacing pipes. The reduction is social costs is a benefit that can be estimated and compared with the incremental cost of tunneling.

- *New revenues*: The opportunity to earn new revenue is certainly a benefit. This type of benefit is often found in biosolids and reclaimed water projects.

- *Cost offsets*: Some projects can offset or replace costs that you would otherwise incur. The use of digester-produced methane to offset natural gas purchases is an example.

- *Deferral or avoidance of other expenditures*: Often spending money at point A means that spending at point B can be deferred or avoided entirely. An example is the case where an investment of several hundred thousand dollars in lowering a sewer interceptor meant that the construction of a pumping station at a different location was completely avoided (see Example 10, below).

The thoughtful identification and quantification of benefits is extremely important in the asset management world for a simple reason: Unless the benefits of a project are seen to clearly outweigh the costs, the project is unlikely to proceed. And the standard of proof is pretty high. Simple statements like, “This project will reduce maintenance requirements,” or “The longer life of this motor makes the added cost worth it” aren’t sufficient. So far as possible, you want to quantify your project’s benefits as well as its costs.

3. LIFE-CYCLE BENEFIT/COST ANALYSIS: USING THE NPV TOOL

Now we've looked at the concept of a benefit/cost analysis and the identification of the direct, social, and environmental impacts of a proposed project. However, in most BCEs you will be looking at a range of alternatives to solving the underlying problem. Some of these alternatives may have far greater or smaller initial capital outlays than others. Some may have high annual costs, some low. Some may realize benefits immediately while in others benefits may be larger but substantially delayed.

In short, the pattern over time of costs and benefits may be quite different from alternative to alternative. How can you make an apples-to-apples comparison among them? The answer is two-fold:

1. Capital decisions (*all* asset decisions for that matter) are made on a life-cycle basis. That is, all benefits and costs are analyzed over an extended period of time, typically twenty years or more.

2. All benefits and costs are brought back to their "present value" so that the net benefits or costs of a project can be represented by a *single number* that represents the value of the project to the community today.

There is a fuller discussion of present value in Appendix C. For the time being, just be aware that the NPV Tool used by the departments will handle all the present value calculations behind the scenes. The NPV Tool is used after all alternatives to address the problem have been identified.

NPV stands for Net Present Value. The purpose of the NPV Tool is to express all future benefits and costs of each project alternative as a single number in today's dollars. Although both benefits and costs are entered in their appropriate places as positive numbers, the NPV Tool internally treats benefits as positive numbers (cash inflows) and costs as negative numbers (cash outflows). If an alternative generates a positive NPV, then it is of value to the customer, the environment, and/or the larger community. If it generates a negative NPV *and all benefits have been fully quantified*, then it is not of value.

Very often, though, not all benefits can or will have been fully quantified. In such cases, the best alternative may be the one with the smallest negative NPV, that is, the alternative with the lowest life-cycle cost.

All information common to all alternatives as well as certain alternative-specific data are entered on the NPV Tool's *Summary* tab. Benefits and costs for each of up to twelve alternatives are then entered on alternative detail tabs named *Alt_1*, *Alt_2*, *Alt_3*, etc.

3.1 ENTERING THE BASIC DATA

The first tab in the NPV Tool, named *Summary*, is where you enter your basic information. On this tab, make your entries in the yellow cells only, as shown in Figure 3, below. The entries are:

- *Agency*—You will normally enter the name of your department here.
- *Project/Problem*—The name normally used for the project you are evaluating or the problem being addressed.
- *Alternatives*—Enter in these cells the names of the alternatives you have identified. Be as descriptive as possible. You do not need to have all cells filled in.
- *Year of Analysis*—This will be the current fiscal year in all cases. For example, if the analysis is being done in fiscal year 2005-2006 (1 July 2005 through 30 June 2006), you will enter "2006."
- *Escalation rate*—Enter the average rate of cost escalation expected over the life of your analysis. Your Asset Management Coordinator can help you choose the best rate.
- *Discount Rate*—Enter the discount rate currently used by your department. Again, the Asset Management Coordinator can help you here.

There are also entries for risk adjustments, discussed below.

Here's an example from a BCE prepared by an agency determining how best to reconfigure or rebuild a portion of its sewer collection system to deal with perceived failure risk.

Mt Pleasant Services District
North Willamette Wastewater Conveyance
Alternatives Net Present Value Analysis

Agency:	Mt Pleasant Services District		Sensitivity Adjustments (%)			Results ($000s)		
Project/Problem:	North Willamette Wastewater Conveyance	Risk Premium	Benefits	Capital Costs	Running Costs	Capital Cost	30-yr NPV	Benefit over 'Do Nothing'
Alternative 1	Do nothing/Investigate condition					$20	($27,973)	
Alternative 2	Rehab Pump Station/Reline Burnell					$4,120	($25,854)	$2,119
Alternative 3	Siphon/All new pipe/Eliminate PSs					$6,750	($9,083)	$18,890
Alternative 4	Gravity/siphon/pump to relined Burnell					$10,350	($19,402)	$8,571
Alternative 5	Rehab PS/New RR Bridge					$5,870	($17,326)	$10,647
Alternative 6	Rehab PS/Dedicated bridge					$5,120	($22,722)	$5,251
Alternative 7	Combine PSs/Road bridge/Reline Burnell					$10,300	($23,666)	$4,307
Alternative 8	No NNPS/Upstream EQ/27" as siphon					$19,400	($29,810)	($1,837)
Alternative 9	Modified Alt #2 (Replace FM & RC Now)					$7,620	($21,582)	$6,391
Alternative 10	Modified Alt #3 (Move Capital out to 2010)					$6,770	($13,322)	$14,650
Alternative 11	Modified Alt #7 (Move costs out to 2008)					$270	($23,848)	$4,124
Alternative 12	(not used)							

Year of analysis:	2005
Escalation rate:	2.50%
Discount rate:	5.50%

Make entries in yellow cells only.

Figure 3: NPV Tool, Example of Basic Data Entry, Summary tab

The data entered onto this *Summary* tab is automatically transferred to the alternative detail tabs named *Alt_1*, *Alt_2*, *Alt_3*, etc., discussed further below. The Summary tab also shows the results of the analysis—the total capital outlays involved in each alternative and the net present value of each alternative. These are not entered on this tab but are brought forward from the alternative detail tabs.

3.2 ENTERING THE DATA FOR EACH ALTERNATIVE

As noted above, all the information entered into the yellow-shaded cells on the *Summary* tab is automatically transferred to the individual alternative detail tabs named *Alt_1*, *Alt_2*, *Alt_3*, etc. These detail tabs contain all information on costs and benefits over the period of analysis, which result in the total capital outlay required over the years (not time-adjusted) and the net present value of all the benefits and costs over the period of analysis, conditioned by the risk adjustments. These two numbers, the total capital outlay and the net present value, are the "results" of the analysis and are transferred back to the *Summary* tab as seen in Figure 1, above.

As on the other tabs, entries are made in yellow-shaded cells only. There are four types of entries:

- *Capital outlays*—Costs of the initial project or facility, including similar costs that might be incurred over the years (*e.g.*, facility expansion).
- *Benefits*—Direct facility-generated revenues, reductions in risk, avoidance of community costs, etc., as discussed in Section 2.5, above.
- *Annual running costs*—Costs that will be incurred annually due to ownership of the facility. These may be constant or increasing—for example, energy costs might increase over time for a pump station requiring increasing pumping due to development.
- *Refurbishment and Replacement (R&R) costs*—Costs that are incurred periodically, typically on a multi-year cycle, to keep the facility in good shape. Such costs typically include asset replacement, structural or electrical rehabilitation, new roof, etc. See the discussion in Section 2.2, above.

Here's an example of one alternative from the Mt. Pleasant analysis shown in Figure 3, with data already entered. Note that risk costs make up the majority of all annual running costs. Also, some significant R&R costs have been identified for the tenth year of the project.

	2005	2006	2007	2008	2009	2010	2011	2012	2013	2014	2015	2016
Expressed in 2005 dollars, unescalated												
Capital Outlays												
Inspection of 27" FM		20										
Other												
Other												
Other												
Other												
Other												
Total capital outlays		**20**										
Benefits:												
Other												
Other												
Other												
Total benefits												
Annual Running Costs:												
Annual O&M cost NNPS-EPS		65	65	65	65	65	65	65	65	65	65	65
Annual O&M cost Pipes		5	5	5	5	5	5	5	5	5	5	25
27" FM Risk Costs		317	317	317	317	317	317	317	317	317	317	95
27" FM River Crossing Risk Costs		567	567	567	567	567	567	567	567	567	567	170
NNPS Risk Costs		400	400	400	400	400	400	400	400	400	400	200
EPS Risk Costs		17	17	17	17	17	17	17	17	17	17	17
4" EPS FM Risk Costs		23	23	23	23	23	23	23	23	23	23	23
Burnell SS		250	250	250	250	250	250	250	250	250	250	63
Total running costs		**1,643**	**1,643**	**1,643**	**1,643**	**1,643**	**1,643**	**1,643**	**1,643**	**1,643**	**1,643**	**657**
R&R Costs:												
R&R for NNPS & EPS												3,500
Replace FM and River Crossing												3,500
Bernell Reline												600
Replce EPS 4" with 6" FM												
Other												
Total refurbishments												**7,600**
Net Benefit/(cost)		**(1,663)**	**(1,643)**	**(1,643)**	**(1,643)**	**(1,643)**	**(1,643)**	**(1,643)**	**(1,643)**	**(1,643)**	**(1,643)**	**(8,257)**

Figure 4: NPV Tool, Example of Alternative Data (partial)

3.2 RISK PREMIUMS AND SENSITIVITY ADJUSTMENTS

You may want to assign a risk premium to one or more alternatives. Risk premiums increase the discount rate used in the analysis and reflect uncertainties over future project performance. They should *only* be used where all benefits are fully quantified and outweigh the costs (that is, the net present value or NPV in the right-most column is positive). See Appendix D for a more thorough discussion.

There is one last set of data entered on the *Summary* tab—sensitivity adjustments. These can be used, like the risk premiums, to reflect risk for specific alternatives, but in a more focused way. They can reflect the risk that an alternative won't fully realize its expected benefits, that it will cost more to build than current estimates, or that it will cost more to own year-to-year.

In the example shown in Figure 5, below, the agency sees some risk in proceeding with a certain water reclamation facility because of its lack of experience with such facilities and some known engineering issues. So it has reduced benefits (reclaimed water sales revenues) for the relevant alternative to reflect the potential that the plant will not be able to operate at designed capacity. The agency has also increased running costs for these alternatives due to uncertainties over the ongoing costs of facility ownership.

From Summary Sheet:		Risk adjustments (+/- percent):	
Year of analysis	2005	Benefits	-10%
Escalation rate	3%	Capital costs	
Discount rate	5%	Running costs	15%

	2005	2006	2007	2008	2009	2010	2011	2012	2013
Expressed in 2005 dollars, unescalated									
Capital Outlays									
Land acquisition		13,533							
WRP construction				69,845					
Sewer constuction				2,830					
Force main to outfall				6,182					
Acquire outfall capacity				5,259					
Engineering/Admin				11,829					
Total capital outlays		**13,533**		**95,944**					
Benefits:									
Reclaimed water sales					852	852	852	852	852
Other									
Other									
Total benefits					**852**	**852**	**852**	**852**	**852**
Annual Running Costs:									
Labor					3,311	3,311	3,311	3,311	3,311
Energy					655	655	655	655	655
Chemicals					655	655	655	655	655
Environmental compliance					115	115	115	115	115
Contractors					260	260	260	260	260
Security					150	150	150	150	150
Other upkeep					150	150	150	150	150
Other									
Total running costs					**5,296**	**5,296**	**5,296**	**5,296**	**5,296**
R&R Costs:									
Motor/pump replacement									
Minor structure rehab									
Landscape refresh									
Electrical rehab									
Other									
Total refurbishments									
Net Benefit/(cost)		**(13,533)**		**(95,944)**	**(4,444)**	**(4,444)**	**(4,444)**	**(4,444)**	**(4,444)**

Figure 5: Partial NPV Tool, Example of Data Entry with Sensitivity Adjustments

Note that the sensitivity adjustments (-10% and 15%) are not entered here directly but are brought forward automatically from the respective columns on the Summary tab (see next example).

The sensitivity adjustments can also easily be used for sensitivity analyses (thus their name). Sensitivity analysis is simply a name for doing "what if" analysis to identify which parameters have the greatest impact on results, or how much risk an alternative can bear before it becomes undesirable.

As an example, here's an analysis of the savings from deferring a new plant for one year and two years.

City of Williamsland
Build Plant Now versus Defer One or Two Years
Alternatives Net Present Value Analysis

			Sensitivity Adjustments (%)			Results ($000s)	
Agency:	City of Williamsland						
Project/Problem:	Build Plant Now versus Defer One or Two Years	Risk Premium	Benefits	Capital Costs	Running Costs	Capital Cost	30-yr NPV
Alternative 1	Build Plant in 2006					$30,000,000	($98,535,583)
Alternative 2	Defer One Year					$30,000,000	($94,050,166)
Alternative 3	Defer Two Years					$30,000,000	($89,692,296)
Alternative 4	(not used)						
Alternative 5	(not used)						
Alternative 6	(not used)						
Alternative 7	(not used)						
Alternative 8	(not used)						
Alternative 9	(not used)						
Alternative 10	(not used)						
Alternative 11	(not used)						
Alternative 12	(not used)						
Year of analysis:	2005						
Escalation rate:	2.50%						
Discount rate:	5.50%						

Make entries in yellow cells only.

Figure 6: NPV Tool, Analysis of the Value of Deferring a Plant

You can see from Figure 6 that deferring the new plant for one year reduces the life-cycle cost of plant ownership by about $4.5 million and a two-year deferral saves about $9 million.

But there is a risk that construction costs will increase faster than expected. How much faster than expected will these costs need to increase before the value of deferral is wiped out and it will be less expensive to build immediately?

Entering various values into the capital cost sensitivity cell for Alternative 2 shows that the increase will need to be 17 percent more than expected for this to be the case. A similar exercise for Alternative 3 shows that the construction cost increase will have to be 33 percent more than expected over two years to make that alternative less attractive than building the plant now.

City of Williamsland
Build Plant Now versus Defer One or Two Years
Alternatives Net Present Value Analysis

			Sensitivity Adjustments (%)			Results ($000s)	
Agency:	City of Williamsland						
Project/Problem:	Build Plant Now versus Defer One or Two Years	Risk Premium	Benefits	Capital Costs	Running Costs	Capital Cost	30-yr NPV
Alternative 1	Build Plant in 2006					$30,000,000	($98,535,583)
Alternative 2	Defer One Year			17%		$35,100,000	($98,795,796)
Alternative 3	Defer Two Years			33%		$39,900,000	($98,642,445)
Alternative 4	(not used)						
Alternative 5	(not used)						
Alternative 6	(not used)						
Alternative 7	(not used)						
Alternative 8	(not used)						
Alternative 9	(not used)						
Alternative 10	(not used)						
Alternative 11	(not used)						
Alternative 12	(not used)						
Year of analysis:	2005						
Escalation rate:	2.50%						
Discount rate:	5.50%						

Make entries in yellow cells only.

Figure 7: NPV Tool, Sensitivity Analysis of Capital Cost Growth

In other words, the savings from deferral will be lost if capital costs increase by 17 percent or more over and above expectations in one year, or 33 percent in two years. Otherwise, deferral will still be the preferred approach.

Some things to be aware of when using sensitivity adjustments:

- As the adjustments are entered, the results will be reflected immediately in the displayed capital outlay and NPV of the alternative.
- Running cost sensitivity adjustments affect both annual O&M costs and periodic replacement and refurbishment (R&R) costs, described further below.

Some notes on costs:

- Capital costs need to include adequate contingencies and allowances for legal, administrative, permitting, and other related costs (see Appendix B). Your Asset Management Coordinator can help with this.
- There are always more costs involved in owning a facility than you will at first realize. Your Asset Management Coordinator can give you a “cost dictionary.” You should review all the cost types in the dictionary and find those that the facility you are evaluating might incur.

- You should work closely with O&M staff to determine what is involved in owning facilities and what the likely costs will be.

- Be sure to enter all costs in current year dollars. The NPV Tool will handle inflation automatically. For very large projects, you may find it more convenient to express all benefits and costs, capital and otherwise, in units of thousands of dollars.

Once you have entered all the data for each alternative, you can see the aggregate results on the *Summary* tab.

3.4 HOUSEKEEPING

Here are some tips to save work and re-work:

- Save your analysis with a unique name—for example, "Reclaimed analysis.xls."

- Save multiple versions of the analysis—for example, "Reclaimed analysis 8-16-2005.xls."

- Save on a server if you can. If your hard disk crashes, you don't want to start all over again!

- Review your analysis with O&M staff. Make sure you've identified all the costs of ownership.

- Use comments liberally. Right-click on a cell and choose "Insert comment" from the context menu. Add a comment like, "This estimate from Tom Harkness 8-12-2005, need to check with Frank on appropriate contingency." Afterwards, hovering your cursor over the cell will make the comment appear in a balloon.

4. A REAL LIFE EXAMPLE: PUMP STATION 64

The San Diego Water and Metropolitan Wastewater Departments have had considerable experience with BCEs, probably more so than all but one or two similar utilities in the United States. In 2004, an inter-departmental team performed four BCEs, and the Metropolitan Wastewater Department has since trained about 70 staff in the BCE methodology.

The example discussed here was one of the four BCEs performed in 2004. Although the example comes from the wastewater system, the BCE team was made up of people from both departments. The description of the BCE follows the steps discussed in Section 1.3, above.

What follows is a summary with comments.

4.1 DEFINE THE DRIVERS

First, the BCE team offered some background:

> "Pump Station 64 (PS 64) was constructed in two stages. The west station was opened in 1972 and houses two sets of 500 hp, two sets of 400 hp, and two sets of 200 hp pumps. The east station was opened in 1989 and houses two additional sets of 500 hp pumps. For several years PS 64 has been plagued with pump vibration problems that have cost millions of dollars in additional maintenance and equipment replacement."

> "Many recommendations have been acted on in the past several years, with little or no improvement in either reliability or cost."

Although the drivers were not overtly stated in the team's report, they were two-fold:

1. Cost to customers (high cost of O&M at the pump station); and

2. Environmental costs, due to a general perception, discussed by the team, that the problems at the station posed a significant spill risk.

4.2 STATE THE PROBLEM

Then the problem statement was given:

> "This BCE was initiated to identify alternatives for addressing the reliability and cost issues and to identify the relative costs and the risks involved with each alternative."

However, the BCE team did not keep its focus exclusively on improving operations at the pump station. It looked well beyond that to evaluate the possibility of major system reconfigurations. In retrospect, a better problem statement might have been:

> "This BCE was initiated to determine how to convey wastewater received from Pump Station 65, the Penasquitos drainage basin, and the Sorrento Valley area to the North City Water Reclamation Plant and/or the Point Loma Wastewater Treatment Plant in a reliable manner and at lowest cost."

So the team did not concentrate solely on *fixing* PS 64, but also considered alternative ways of approaching the pump station's function at the most basic level. As the team noted, the department had received all manner of expert opinion in the past, but without any real benefit. It was unreasonable for this team of "non-experts" to expect to arrive independently as a purely technical solution to the problems, but they could certainly put their businessman's hats on and make some business judgments.

In fact, the BCE is sometimes called a "business review" to differentiate it from similar exercises such as value engineering.

4.3 FORMULATE ALTERNATIVES

As in all cases where a team is preparing a BCE, alternatives were defined in brainstorming sessions. Here are the alternatives the team came up with:

1. *Do Nothing*—Live with the current problems.

2. *Make pump station modifications*—Make modifications to PS 64 as recommended by a recent wetwell modeling report to alleviate vibration problems and reduce maintenance. This alternative included the cost of 1,000 man-hours annually for the subsequent four years to investigate and optimize operational procedures at the pump station.

3. *Replace PS 64*—Replace PS 64 with a completely new pump station near the current site.

4. *Tunnel from PS 64 to the Rose Canyon trunk sewer*—Dig a tunnel to allow the majority of the flow to follow a gravity line down to the Rose Canyon Sewer. Pump the wastewater required by the North City Water Reclamation Plant with a second, smaller pump station from the tunnel entrance to North City.

5. *Replace some or all pumps with pumps with VFDs*—Replace some or all of the constant speed pumps currently installed at PS 64 with pumps that have variable speeds and are properly matched to the existing forcemain.

6. *Replace PS 64 and eliminate PS 65*—Replace Pump Station 64 with a completely new pump station near the current site including a wetwell deep enough that PS 65 wastewater currently pumped to PS 64 can instead flow by gravity.

Alternative 1, the so-called "Do nothing scenario," is included in every BCE. In some cases, such as mandatory or regulatory-driven projects, it may not be at all realistic; but it should always be present if only to highlight the reasons that another alternative must be found.

In this case, the team ultimately determined that the existing problems *could* be lived with if necessary. In fact, in economic terms and taking environmental risks into account, it was by no means the most expensive alternative.

Alternatives 2, 3, and 5 all dealt with "fixing" the pump station. These were the only alternatives that addressed the problem statement that the team had put forth somewhat narrowly (see discussion above).

Alternatives 4 and 6 were creative and went well beyond "fixing" PS 64. Alternative 4 would have eliminated PS 64 while Alternative 6 would have replaced it in its entirety but with modifications that would eliminate the need for another major pump station, generating obvious savings.

Thus the BCE team formulated a good list of alternatives to solving the problem. Was the "best" alternative ever put forward? It's hard to know, but the question suggests the importance of making sure all ideas are on the table, at least in the early going. If an alternative is not put forward, it will never be judged, analyzed, recommended, or adopted.

Example 10: An unexpected alternative.

In a recent BCE in Sacramento, the team was evaluating alternatives to a proposed $15 million relief sewer with a pump station in the middle. The team was in its third brainstorming session before someone asked if the receiving interceptor, then in design, could be lowered a few feet, eliminating the need for the pump station entirely. A brief investigation indicated the answer was "yes," and this ultimately became the recommended and adopted alternative. The project's capital cost was reduced by over $4 million, and life-cycle ownership costs were reduced by 43 percent.

If the team had only had *two* brainstorming sessions, this new idea would never have been put forward. The importance of concentrating on alternatives cannot be overemphasized!

(This BCE is described in more detail in Appendix E of this manual.)

Building complete life-cycle benefit/cost analyses for a large number of alternatives is very time consuming. In the Sacramento case above, no fewer than fifteen alternatives were formulated by the BCE team. Even in the case of PS 64, with six alternatives, building that number of detailed analyses would be onerous.

For this reason, some judgment is usually applied before deciding which alternatives to carry forward to analysis. This is called the "fatal flaw" process because you are looking for indications that an alternative has a fatal flaw and that further analysis would be a waste of time.

The fatal flaw process is dangerous because there is the possibility that you may eliminate an alternative that has value, or that with some rethinking might even be superior to all other alternatives. Caution is called for.

The PS 64 BCE team decided that two of the six alternatives, numbers 4 and 5, had fatal flaws:

4. *Tunnel from PS 64 to the Rose Canyon trunk sewer*—Dig a tunnel to allow the majority of the flow to follow a gravity line down to the Rose Canyon Sewer. Pump the wastewater required by the North City Water Reclamation Plant with a second, smaller pump station from the tunnel entrance to North City.

   Fatal flaw: The reclaimed water demand at North City is expected to increase in the next several years such that nearly all PS 64 flow would be reclaimed at North City. This increased flow to North City, and subsequent decrease in flow from PS 64 into the Rose Canyon Sewer, removes the primary operating cost savings of this project.

5. *Replace some or all pumps with pumps with VFDs*—Replace some or all of the constant speed pumps currently installed at PS 64 with pumps that have variable speeds and are properly matched to the existing forcemain.

   Fatal flaw: Physical modeling of the facility has shown that the pumps are not the cause of the vibration. Rather, the vibration is a result of the turbulent flow going into the pumps. Replacing the constant speed pumps with variable speed pumps will not address the cause of the vibration problem.

This left four alternatives to analyze.

4.4 ANALYZE ALTERNATIVES

The PS 64 BCE team decided to do a "cost only" analysis of the alternatives. They could also have done a true benefit/cost analysis, where the cost would be the initial outlay required and the benefit would be the avoided direct and risk costs present in the "do nothing" alternative.

In the former case, cost only, the team is looking for the lowest life-cycle cost of ownership. In the latter case, it is looking for the largest life-cycle benefit. Either approach yields the same answer in terms of the preferred alternative.

The BCE team generated a lot of capital and O&M costs in its work, the more important of which were described in its report:

1. Ongoing pump maintenance costs are $500k/year if no corrective action is taken.

2. Ongoing pump maintenance costs are $100k/year if corrective action is taken to mitigate pump vibrations.

3. Ongoing facility maintenance exclusive of pumps is $500k/year.

4. If no corrective action is taken, PS 64 will require replacement of one set of pumps every four years.

5. Maintenance costs that remain constant over all alternatives (such as the cost of purchasing chemicals) are omitted from the NPV analysis and calculations.

6. Risk associated with spills are assigned a value of $1 per gallon spilled.

This last item, spill risk, deserves some discussion. The salient points from the team's work were:

1. A risk cost of $1 per gallon spilled was reasonable because recent spill fines in the city were at about that level. The fines were presumed to reflect both the environmental impact of spills and a punitive portion as well, so there was no reason to set a higher cost on spills.

2. Given the probability, likely size, and resulting dollar consequence of spills, PS 64 was currently incurring a risk cost of spills of about $100 thousand annually.

3. The best possible outcome would reduce the annual risk cost by half, or by about $50 thousand. This amount was not very significant in the overall analysis.

4. Any major modifications to PS 64 would increase the risk cost to about $200 thousand a year during the period when the modifications were being made.

Significantly, the team found that the troubles at PS 64 did not, in fact, have great spill risk implications. The excessive O&M costs were far more important. Second, making improvements at the pump station would actually increase spill risk during the time that the improvements were being made. Finally, viewed rationally, spill risk was a relatively minor part of the overall project economics. All of this was somewhat of a revelation because, while there had been a lot of prior discussion over the potential for spills at PS 64, the issue had never been approached rigorously.

On to the analysis. The team used the then-current version of the NNPV Tool, which will look familiar from the previous section of this manual. Here's a portion of the detailed analysis tab for Alternative 2, *Make Pump Station Modifications*. Some potential benefits were identified but not costed (*i.e.*, no values were assigned to these benefits in any year). Notice how the risk cost of spills changes.

	2004	2005	2006	2007	2008	2009	2010	2011
Expressed in 2004 dollars, unescalated								
Capital Outlays:								
Construction								
Electrical Upgrades				750				
HVAC					750			
Wetwell Baffles		100						
Straightening Vanes / Gate Valves		220						
Solid Shafts			325					
Flex Couplings			50					
Facility Automation		200	200					
CONSTRUCTION TOTAL		520	575	750	750			
Project Management (20% of constr)		104	115	150	150			
Design (15% of constr)		78	86	113	113			
Construction Mgmt - City forces (5% of constr)		26	29	38	38			
Construction Mgmt - Consultant (10% of constr)		52	58	75	75			
Contingency (5% of constr)		26	29	38	38			
Total Capital Outlays		**806**	**891**	**1,163**	**1,163**			
Benefits:								
Improved design/technology (seismic)								
Better planning for future flows								
Improve PS Employee Morale								
Total benefits								
Annual Running Costs:								
O&M Pumps (materials/wages/fringe)		500	500	400	300	200	100	100
O&M Facility (materials/wages/fringe)		500	500	500	500	500	500	500
Operational labor (wages/fringe)		50	50	50	50			
Unexpected events		40	40	30	20	10	10	10
Spills/Risk		200	200	200	200	50	50	50
Power								
Total running costs		**1,290**	**1,290**	**1,180**	**1,070**	**760**	**660**	**660**
R&R Costs:								
Total refurbishments								
Net Benefit		**(2,096)**	**(2,181)**	**(2,343)**	**(2,233)**	**(760)**	**(660)**	**(660)**

Figure 8: Partial NPV Tool Data Entry for Alternative 2, PS 64 Analysis

The team prepared similar 30-year analyses for the other three surviving alternatives (remember, two alternatives had been found to have fatal flaws). The result was a single time-adjusted life-cycle cost of ownership for each alternative, fully taking environmental risks into account.

Here are the final results:

	Alternative	Life-cycle cost (NPV)
1.	Do Nothing	($34,757,000)
2.	Make pump station modifications	($20,538,000)
3.	Replace PS 64	($39,854,000)
6.	Replace PS 64 and eliminate PS 65	($68,506,000)

Figure 9: Life-cycle Costs for Remaining Alternatives, PS 64 Analysis

Since this was a cost-only BCE, all the NPVs are negative and smaller numbers are better. Interestingly, if the physical modeling exercise had not suggested the specific set of improvements in Alternative 2, the least-cost option would have been to "live with the problems," because the next most attractive remedy, replacing the pump station, was considerably more expensive.

4.5 Recommend and Report

The team summarized its work and made the following recommendation:

> "Alternative 2 is the recommended approach. The wetwell modeling completed for this pump station indicates a significant improvement in pump vibration given a few minor modifications to reduce turbulence in the wetwell. These changes, along with adjustments to the DCS control of the station, should improve both the reliability and the maintenance costs at this pump station. It is by far the most cost effective alternative, with a savings of $14 to $48 million compared to the other alternatives."

The recommendation was approved. The Team's final report can be found in your Asset Management Library.

4.6 Observations on the Team's Work

Every BCE is different and provides different lessons. This one was no exception. The value of the team's work was apparent from several angles:

1. The costing of spill risk, the first-ever effort in this direction by the department, clearly showed the way for further work in this area. It also made the analysis fully quantitative.

2. There was some very interesting "out of the box" thinking, especially in alternatives 4 and 6. The idea of changing most outgoing flow to gravity via tunneling was new and had promise, although anticipated changes elsewhere in the system caused it to be discarded.

The concept of rebuilding PS 64 in such a way as to eliminate PS 65 was also new and very interesting. Although the alternative turned out to be too expensive, it might have been otherwise!

3. The ultimate solution did not arise directly from the team's work, but its proposal found an attentive, educated, and engaged audience in the team. Equipped with a full understanding of the PS 64 situation, the team was ready to consider the proposal along with the other alternatives it had defined independently.

In this case, as in others, the BCE approach led to a solution that management could have confidence was the best solution to a problem at the right time.

APPENDIX A: DEPARTMENTAL POLICY ON BUSINESS CASE EVALUATIONS

Note: The following is a draft policy of San Diego's Metropolitan Wastewater Department. It has not been formally approved as of this writing. The Water Department has no formal policy requiring BCEs.

PURPOSE

This policy describes the organization and processes by which significant projects shall be proposed, evaluated and recommended to the MWWD Director for approval. The intent is to assure informed, effective and efficient decision making relative to planning and committing resources for new or significantly revised projects. It is emphasized that this policy is aimed at value-added organizational thinking and processes that balance the need to generate appropriate information for key resources allocation decisions with the desire to avoid onerous overly bureaucratic dictates that stifle creativity and waste individual and work group time. Refinements are anticipated over time to maintain this purpose.

Basic to the informed decision-making desired is the intent to consider total project costs and benefits in the context of the overall business concerns of the enterprise and its ratepayers. In that vein, the policy incorporates guidelines for use of the Business Case Evaluation (BCE) methodology to analyze life-cycle viability of projects.

ROLES AND RESPONSIBILITIES

The **Asset Management Executive Committee** ("the Committee") is hereby chartered to evaluate submitted projects and recommend their disposition to the Director.

- The Assistant Director shall serve as the Committee Chair.

- The Department Asset Manager shall serve as the Committee Vice Chair. (The Vice Chair shall coordinate all administrative functions of the Committee such as assembling and distributing the meeting agenda, coordinating the attendance as desired of Project Proponents or other parties with information relevant to Committee deliberations, and tracking action items.)

- The Committee shall also have as permanent members at least one of the management team from each division except Environmental Monitoring and Technical Support, and Storm Water Pollution Prevention. Managers from these two divisions may attend and fully participate if interested.

- Specific rules for conduct of meetings and deliberations shall be generated by the Committee as desired.

The **Proponent** is any person or organization within the Department proposing to commit resources for a project meeting criterion under Qualifying Projects, below.

The **Technical Reviewer** is any designee (employee, consultant, working group) charged by the Committee to review and validate the correctness and appropriateness of an analysis (such as a BCE) or specific facts and logic pertinent to decision making.

The **Director** shall determine final disposition of each project after consideration of the Committee's recommendations.

QUALIFYING PROJECTS

Unless specifically exempted from this policy by the Director, all projects meeting any of the criteria below shall be subject to this policy:

- The initial cost estimate is $50,000 or more. (Note: if an ongoing smaller project's subsequently revised total cost estimate through completion exceeds $50,000, the Committee should be notified immediately via memo or e-mail to the Vice Chair.)

- Project complexities, risks, impacts on the overall system, or other factors indicate the need for detailed analysis in the judgment of the Proponent or the Committee.

- The Director requires that the project be subject to this policy.

KEY FACTORS FOR RECOMMENDING PROJECT APPROVAL

The Committee shall consider the factors below in determining recommendations to the Director:

- Safety & health (from inspections, operations & maintenance or engineering observations)

- Regulatory Mandates (from Administrative Orders, etc.)

- System capacity (either current deficiencies or future growth accommodations)

- Asset condition (Repair/Replacement bearing on system reliability)

- Operating efficiency (such as Energy Audit Recommendations)

- Maintenance optimization (not included in Repair/Replacement)

- Aesthetic considerations (from outreach with Community Planning Groups, etc.)

INITIAL PROJECT PROPOSAL FOR CONSIDERATION

The Proponent shall draft a succinct Project Abstract and submit it to the Committee (via the Asset Manager) at least one week prior to scheduled deliberations.

The Project Abstract is in effect a bare-bones BCE, summarizing the critical thinking that should go into an organizational decision to commit public resources to a project. As such, authors should articulate straight forward, sound rationale for the proposed project. For some projects (i.e., urgent or easily analyzed) it is envisioned that project approval may be recommended directly from a clearly worded, compelling Abstract. While orderly thought and some level of research are needed to produce the Abstract, it is not intended that this one page document be overly time-consuming to produce. In many cases, it is intended that the Abstract be the mechanism to justify the allocation of resources to dedicate additional time to produce a *More Complete BCE* (see below).

The submitted Abstract shall contain acknowledgement of the originating division's Deputy Director. (signature or forwarding e-mail with comment if desired.)

To streamline Committee processes, it is encouraged that Proponents have informal discussions prior to the meeting with workgroups potentially impacted by the project and be able to summarize these discussions as requested.

The submitted Abstract shall generally not exceed 1 page in length and shall contain:

- A one sentence statement of the issue or problem that the project will address.
- A brief description of the project proposed to address the issue or problem.
- Project benefits in terms of customer service levels or cost reductions relative to the Key Factors for Approval cited above.
- Known alternatives and the relative advantages of the proposed project when compared with those alternatives.
- Other relevant considerations (if any) such as impacts on stakeholders
- The likely Acquisition Cost (through implementation / placement into operational use - range and basis of estimate)
- The likely ongoing annual operating, maintenance, and/or other costs of the project. (range and basis)

INITIAL COMMITTEE CONSIDERATION

From the Project Abstract, the Committee shall determine the type and level of further analysis (if any) necessary to properly evaluate the proposed project. The Committee's direction will normally fall into one of the following courses of action:

- Defer further consideration of the proposed project. (With criteria for such reconsideration stated)
- Require preparation of a more complete BCE to facilitate further consideration of the proposed project. (See More Complete BCE's below).
- Recommend to the Director that the project be approved immediately. (With comment as to urgency or sufficiency or justification with the rationale stated in the Abstract)

MORE COMPLETE BCE'S

Where a more complete BCE is required, the Committee shall specify the depth of analysis and effort to be expended, and authorize commensurate allocation of resources, including designation of Technical Reviewers with responsibilities as described below.

In general, the minimum requirement is that the BCE be prepared by the Proponent (or other such person as directed) with sufficient consultation with other staff to ensure the accuracy of the analysis.

For larger or more complex projects, the Committee may direct an in-depth consideration by a cross divisional team of subject matter experts, with or without involvement of outside experts or consultants. Whether or not this is specific direction from the Committee, it is emphasized that one of the intended strengths of a solid BCE is the synergy of a cross functional team that devotes sufficient time and perspective to the process of generating alternative. To the extent practicable, this synergy should be employed.

Where necessary, the Committee shall designate an individual already trained in the BCE process to assist the process.

All BCEs shall be prepared in accordance with the Water/Wastewater BCE Manual.

In all cases, minimum requirements of the BCE shall be:

- A meaningful statement of the problem and description of drivers for the project.
- A comprehensive list (with brief descriptions) of alternatives for addressing the problem, including the "do nothing" alternative.

- A justification for eliminating any alternatives from the detailed analyses.
- Detailed analyses of all surviving alternatives on a life-cycle cost basis to include benefits, costs of ownership, risks, and other relevant factors, all quantified to the extent practicable.
- Final recommendations to the Committee, with any qualifications specified.

BCE VALIDATION

Prior to submitting the BCE to the Committee for final disposition, the proponent shall obtain a signed validation assurance from each Technical Reviewer designated by the Committee. These assurances are designed to make the Committee deliberations efficient and focused on the business impacts of the proposal as opposed to verifying the appropriateness and accuracy of the analysis. The divisions involved in every BCE, and their main areas for review and validation, are:

- Services and Contracts: Correct inflation and discount rates are used. The financial and present value analyses are formally correct, relevant, and complete.
- Engineering and Program Management: All reasonable alternatives are considered. Capital costs of alternatives are conservatively presented and inclusive of appropriate contingencies and associated costs such as legal, permitting, administrative, planning, design, etc. Capital cost risks are presented and adequately dealt with.
- Operations and Maintenance (Operations & Maintenance and/or Wastewater Collection): All reasonable alternatives are considered. Life cycle considerations are comprehensive and accurately costed, reflecting full ongoing costs of ownership. Project cost and other risks are presented and adequately dealt with.

For some projects, the Committee may designate Technical Reviewers outside of these three divisions. (Examples might be requiring a Technical Reviewer in Engineering and Capital Projects if the project is of a type that normally falls within that organization's purview, or requiring a legal Technical Reviewer when there are issues of fines, claims, or interpretation of regulatory mandates.)

If significant uncertainties remain, the Technical Reviewer's validation assurance shall so note and recommend how best to assess them.

FINAL CONSIDERATION

The Committee shall review the completed BCE for the proposed project and recommend one of the following:

- Deny or Defer further consideration of the proposed project, with stated rationale for denial or criteria for further consideration.
- If serious uncertainties remain, require that the BCE be further developed in specific areas to reduce the uncertainties.
- Recommend project approval to the Director (with initiation year specified).

PROJECT APPROVALS AND ASSOCIATED COORDINATIONS

The Director will receive recommendations from the Committee and make a final determination regarding disposition. The Chair and Vice Chair will work with all divisions to coordinate this process to be the most effective and efficient. (For example, it may be useful to arrange for the Director to attend select Committee meetings to participate in deliberations and provide timely input into the analysis process. Also, it is important that project approvals be synchronized with key analyses for rate setting and debt issuances).

APPROVED PROJECT TRACKING

The Committee shall monitor the progress of previously approved projects for changes in initial cost, projected ongoing ownership costs, technology, potential system impacts, etc. The monitoring shall continue through final bid for construction. Where changes suggest that the conclusions of the most recent BCE may be affected, the Committee shall direct that the BCE be updated or repeated prior to proceeding with the proposed project.

SUPPORTING ACTIVITIES

The Committee shall take such actions as required to sustain the implementation of this policy, including the assignment of duties to specified individuals, to establish and maintain:

- The Water/Wastewater BCE Manual & related past BCE's as example products.
- A library of prior BCEs and BCE training materials.
- Procedures and standards for estimating capital costs (contingencies, legal costs, administrative costs, etc.) and labor costs (percentages for benefits, overhead, etc.)
- An up-to-date library of cost categories & costs including direct, risk, environmental, and societal costs.
- An ongoing program to train existing and new staff in BCE preparation.

APPENDIX B: COSTING CAPITAL OUTLAYS AND LABOR

Many BCEs involve analyses involving the cost of new facilities and the need to add or reduce labor effort. This appendix briefly addresses both.

COSTING CAPITAL OUTLAYS

Costing major capital works projects is a science familiar to those that do this sort of work everyday. You may need to do this in your own BCE. If so, there are two sources of help:

1. People in the Engineering and Capital Projects (E&CP) Department; and

2. Your own Asset Management Coordinator, who can provide guidance on some of the factors discussed below.

The starting point in most costing situations is the breakdown between land, construction, construction support, and contingencies.

- *Land*—The alternative you are evaluating may or may not require the purchase of land or rights-of-way. If it does, you should discuss the matter with people in E&CP to see how they are currently costing land. Remember also that the land purchase may need to precede actual construction by a year or more; that timing should be reflected in your analysis (see Figure 2 for an example).

- *Construction*—Actual costs of construction should be broken down by major system or even farther if possible. The more detail in your costing, the more confidence your analysis will earn. Again, E&CP can be of great help here.

- *Construction support*—There are quite a few activities that directly support construction. These include final planning, design, construction management, permitting, legal, and possibly other activities as well. Each is typically expressed as a percentage of construction cost (again, see the example at Figure 2). Your Asset Management Coordinator can help you determine the percentages currently used in the department.

- *Contingencies*—A proposed construction project always includes a cost for "contingencies." This is based on the fact that, when the dust settles, you will often find that the project cost more than was anticipated. Contingencies are typically highest (30-50 percent) when the project is at the conceptual stage and are reduced as the project becomes better defined and costs are known in more detail. Again, your Asset Management Coordinator can provide support.

When analyzing larger projects, you may need to consider how their costs will be incurred over a period of several years and reflect this timing in your analysis.

COSTING LABOR

Defined methods of costing labor, either new or avoided, are less commonly encountered. This appendix discusses the issue briefly.

Labor costs need to be built up from labor hours. Since costs are normally expressed in dollars per year, it helps to understand how many labor hours there are in a year. The example below is based on general experience in the industry.

2,080 hours	Potentially available time (52 weeks X 5 days a week X 8 hours a day)
–120 hours	Subtract three weeks vacation
–96 hours	Subtract 12 holidays and sick days
1,864 hours	Actual work time on department business
–514 hours	Subtract training and other internal activities
1,350 hours	"Attendance hours," available for work orders
70%	Multiply by typical utilization (charged to work orders)
945 hours	Productive time actually working on work orders

Figure 10: Sample Labor Hour Productive Time Analysis

Let's use these hours to determine an actual hourly rate that might be used in a BCE.

Example 11: The real cost of maintenance.

A senior maintenance technician position pays $65,000 a year. Fringe benefits such as health care and retirement average 40 percent of base compensation.

Let's do the numbers. The actual cost to the city of a technician is $65,000 plus 40%, or $91,000.

Dividing by the numbers above, the hourly cost of having the technician available for work orders is $91,000 divided by 1,350, or $67.41 an hour. The hourly cost of actually doing the work is $91,000 divided by 945, or $96.30 an hour.

	$65,000	annual direct salary
add:	26,000	benefits at 40%
	$91,000	total annual cost
divide by:	945	hours spent on work orders
	$96.30	cost per hour of productive work

In a BCE, labor will normally be costed using the higher number, $96.30 an hour. This is because if maintenance requirements are reduced by 945 hours, the need for staffing is reduced by one position. Conversely, if an alternative means that 945 hours are added to maintenance requirements, an additional technician will be needed.

Be aware that the hourly labor rates shown in most city compensation tables are based on full 2,080-hour years and are not suitable for use with BCEs.

How do you determine the base compensation to use? Different people in the same job classifications are paid different wages depending on accomplishments, experience, and seniority. Obviously you don't have specific persons in mind when evaluating additions or reductions in labor requirements.

It is usually safe (and easy) to simply use mid-grade compensation as the basis for costing both new and avoided labor hours. However, there are various exceptions, two of which are:

- *Avoided labor hours*—Due to average high longevity, in many agencies most people are near or at the top of their grades. If this is the case in the situation being addressed by the BCE, then the hours avoided are probably hours now being spent by people at the top of their grade, and the compensation rate should reflect this.

- *New labor hours*—In some cases where new labor hours are necessary, they may be worked by new people who will be paid at mid-grade or even lower. Again, the compensation rate should reflect this if it is the case.

In your BCE, it might be wise to gently remind management that a course of action requiring new labor may not work out unless that labor is indeed supplied through the budgeting and staffing process. Similarly, a course of action based on a benefit of reduced labor will not yield that benefit unless labor actually *is* reduced through attrition, redirection, or other strategy. It is possible to reduce labor repeatedly and significantly through the BCE process and find, at the end of the day, that you haven't saved your customers any money at all!

The concepts in this appendix are general and the numbers are merely "typical" for the industry. When you need to cost labor, your Asset Management Coordinator can supply you with the right approaches and numbers for your department.

APPENDIX C: PRESENT VALUE

The methods of present value (commonly abbreviated as PV) are used to determine the value of future case flows from today's viewpoint. Although they were originally developed to evaluate the economic feasibility of large infrastructure projects, they migrated to the world of private business and are universally used to determine whether new plants should be built, new stores opened, or similar investments should be made. From a private sector viewpoint, any outlay of funds must provide a return to the owners of the company, typically the shareholders. The required rate of return is defined and called a "discount rate" and used in the PV analysis. If an investment cannot generate this required rate of return, it is usually not made.

With the growth in asset management in the United States, economic analysis is increasing in importance among public sector utilities. And just as in the private sector, the justification of a project is typically made by PV analysis. The discount rate, typically set at the utility's borrowing rate (see the Appendix D for further discussion), is considered the required rate of return of the utility's customers.

PV BASICS

Conceptually, PV analysis is simply compound interest analysis seen in reverse. So let's look first at an example of a compound interest calculation.

Example 12: The grasshopper and the ant.

You have deposited $1,000 in a savings account earning 4 percent annually. How much will you have in the account after ten years?

Let's do the numbers. The formula for the future value (FV) of an amount earning compound interest is:

$$\text{Future value} = \text{Present value} \times (1 + \text{Interest rate})^{\text{Number of years}}$$

Substituting the actual numbers for the elements of the equation:

$$\text{Future value} = \$1{,}000 \times (1 + .04)^{10}$$

After ten years you will have $1,480.24 in your savings account.

Now let's look at exactly the same situation "turned on its head" and see how this investment pencils out if you have a required rate of return of 5.5 percent.

Example 13: A bad investment.

If you invest $1,000 dollars today, you will receive $1,480.24 ten years from now. Is this a good investment at your required rate of return of 5.5 percent?

Let's do the numbers. The formula for the present value (PV) of a single future cash flow is:

$$\text{Present value} = \frac{\text{Future value}}{(1 + k)^{\text{Number of years}}}$$

where k is the required rate of return. Substituting the actual numbers for the elements of the equation:

$$\text{Present value} = \frac{\$1{,}480.24}{(1 + .055)^{10}}$$

From this formula, the PV of the future cash flow is $866.58. In other words, you are being asked to invest $1,000 in return for an amount that, today, is worth less to you than $1,000. The investment is not a good one for you.

It is worth noting in this example that if your required rate of return were four percent, the present value of the future cash flow would be $1,000, exactly what you are asked to invest.[3]

[3] In any case where the present value of benefits exactly equals the outlay required to earn those benefits, or where the return on investment is exactly equal to our required rate of return (these two are actually the same thing), an economist would say that we are "indifferent" to the investment.

THE VALUE OF DEFERRAL

One impact of present value analysis is that the benefit of deferring expenditures can be clearly identified. Here's a simplified example, using the PV formula from Example 13.

Example 14: In praise of procrastination.

Your department plans to build a new treatment plant for $30 million. It will take two years to build at $15 million a year and will incur running costs of $4 million a year starting in the third year. The start of construction is scheduled for next year, but there is some uncertainty over demand growth and whether the plant might be able to be deferred. What's the value of a one-year deferral in construction at a discount rate of five percent?

Let's do the numbers, considering only the capital costs (all costs in millions):

	No Deferral		Defer One Year	
Year	Outlay	PV	Outlay	PV
1	$15.0	$14.3		
2	$15.0	$13.6	$15.0	$13.6
3			$15.0	$13.0
	Total PV	$27.9		$26.6

The value of a one-year deferral of the capital investment *only* is $27.9 million less $26.6 million, or $1.3 million. A two-year deferral is worth about twice this, or $2.6 million.

A more compete analysis would also consider the deferral of the annual running costs and would yield a higher savings. Doing the same analysis on a 30-year life-cycle basis with the department's NPV Tool and considering the $4 million annual running costs as well as capital outlay, the savings are:

1-year deferral: Savings of $4.8 million
2-year deferral: Savings of $9.3 million

Weighed against these savings, of course, would be the risk costs associated with not having the facility on line when needed.

The concepts used in valuing a deferral of a construction project also apply to valuing the benefit of longer life in an asset. Here's an example, again using the formula from Example 13.

Example 15: Is longer life worth it?

You need a new pump. You can buy one for $15 thousand that has an expected life of 20 years, or you can spend $18 thousand for a pump with a life of 30 years. Energy and maintenance costs will be the same. If your required rate of return is five percent, which should you buy?

Let's do the numbers. To make things fair we will look at what it takes to get a total pump life of 60 years. The 20-year pump will need to be replaced in years 20 and 40, the 30-year pump in year 30 only. Either way, you will end up in year 60 "even" because you'll need a new pump that year no matter which way you go.

Pump life:	20 years	30 years
Pump cost:	$15,000	$18,000
Year	Replacement cost PVs	
20	$5,653	$0
30	$0	$4,165
40	$2,131	$0
Total PVs	$7,784	$4,165

The PV of future replacement costs of the 30-year pump is $3,619 less than that of the 20-year pump. Since the initial cost is only $3,000 more, the 30-year pump is the better value.

A more direct analysis can be done using Excel's PMT function (see Example 18).

You can see that the PVs get quite small after twenty years or so. When a cost or benefit is far in the future, its value today may become rather insignificant. Your long-lived pump had to struggle a bit to justify itself, even though its useful life was 50 percent longer and its cost was only 20 percent more! If the discount rate used were just one percent higher, the decision would have been a push. And at anything above six percent, the shorter-lived pump would have been preferable.[4]

[4] This brings up an important point: As interest rates rise, fewer and fewer projects will be justified. This is as true in the public sector (or should be) as in the private. The reason is that, as interest rates rise, the required rate of return goes up as well. And when the required rate of return increases, fewer and fewer projects among the universe of possible projects can generate that rate of return

ANNUITIES

Many instances will arise in BCEs where you will need to deal with costs or benefits that are the same year after year. The NPV Tool used by the department can deal with these situations quite well, but sometimes you may want to do a separate calculation of the PV of these "level cash flows."

Streams of identical cash flows for a specific number of periods are called "annuities." Examples might be (inflation not included):

- Reclaimed water sales after a plant is up and running
- Energy costs for a pump or pump station
- Chemicals or labor for a plant or pump station.

In fact, many or perhaps even most of the O&M costs in your BCE analysis will turn out to be annuities.

There are four parameters in any annuity situation. If you know any three, you can solve for the fourth using Excel's financial functions. Here are the four parameters:

- *Payment* (Excel's 'Pmt')—The amount received or spent each period.
- *Rate of return* (Excel's 'Rate')—The rate of return of the annuity.
- *Number of periods* (Excel's 'Nper')—The number of periods that the Payment is received or spent.
- *Present value* (Excel's 'PV')—The value of the annuity at its commencement.

Let's look at an example.

Example 16: Investing to avoid costs.

A new pump is expected to save $1,000 a year in energy and maintenance costs over its 20-year life. What is the value of those savings today if your required rate of return is 5.5 percent?

Let's do the numbers. You know that the payment (Pmt) is $1,000, the number of periods (Nper) is 20, and the required rate of return (Rate) is 5.5%. You need to solve for the present value (PV), which uses, by more than mere chance, Excel's PV function. Using Excel's help screens, you find that the proper format is **PV(rate,nper,pmt**,fv,type). The last two entries are not in bold so they aren't required (and you can just ignore them here).

So click on a blank cell and type in =PV(.055,20,1000). You hit the return key and see:

-11950.38

The amount looks reasonable, but it's negative. What's up? Excel is simply analyzing the annuity as an investment. It's saying, "A 20-year annuity consisting of inflows of $1,000 a year at a required rate of return of 5.5% is worth the investment (*i.e.*, an outflow) of $11,950.38 today."

To excel, inflows are positive (they add to your checkbook balance) and outflows are negative. They always balance one another in annuity analysis. When you think about it, this makes sense.

In the case at hand, you now know that you are justified in spending up to $11,950 to achieve the savings anticipated from the new pump.

Sometimes you will want to solve an annuity situation for something other than present value. An example might be when we know the cost of something and want to see what kind of savings we will need to justify it. Here's an example.

Example 17: Investing for increased sales.

Your department plans an expansion of a reclaimed water plant costing $4 million with a life of 30 years. New running costs of the expansion will be $100 thousand a year. What increase in reclaimed water sales will be needed to justify the expansion if the required rate of return is 4 percent?

Let's do the numbers. You know that the required rate of return (Rate) is 4%, the number of periods (Nper) is 30, and the present value (PV) is -$4 million (remember, this is an investment so it's negative). You need to solve for the payment (Pmt) of the annuity.

Using Excel's help screens, you find that the proper format is **PMT(rate,nper,pv**,fv,type). As before, you ignore the non-bold entries and consider the investment as a negative number since it's an outflow of money. So you click on a blank cell and type in =PV(.04,30,-4000000). You hit the return key and see:

231320.4

So you will need to increase annual water revenues by $231 thousand to justify the $4 million investment. Of course, you need to add in the new $100 thousand running costs as well, so the total water revenue increase needed is $331 thousand a year.

Similarly, you can solve annuity situations for number of periods (Nper) and required rate of return (Rate) if the other three annuity parameters are known in each case. But first, another PMT example.

Back at Example 15 you looked at whether a 20-year pump or a more expensive 30-year pump was the better value. We will revisit the question here with a simpler and more direct approach, which is simply to "annualize" the capital cost and see what the yearly equivalent payment would be.

Example 18: Is longer life worth it? (revisited from Example 15)

You need a new pump. You can buy one for $15 thousand that has an expected life of 20 years, or you can spend $18 thousand for a pump with a life of 30 years. Annual energy and maintenance costs will be the same. If your required rate of return is five percent, which should you buy?

Let's do the numbers. You can simplify things compared with Example 15 by asking, "What are we paying for the pump each year?" You can answer this question quickly by using Pmt function **PMT(rate,nper,pv**,fv,type) as in the previous example: For the 20-year pump you type in PMT(.05,20,-15000) and get

1203.64

which is to say, "At my five percent required rate of return, paying $15 thousand today is exactly the same as making 20 annual payments of $1,203.64."

For the 30-year pump you type in PMT(.05,30,-18000) and get

1170.93.

So it's effectively costing you $1,204 annually to pay for the 20-year pump versus $1,171 for the 30-year pump. That's a $33 annual cost advantage for the long-lived pump—not much, but all other things being equal it looks like the 30-year pump is the way to go.

The cost advantage is smaller than might have been expected. Just as in Example 15, any discount rate even fractionally above six percent would have made the shorter-lived pump preferable.

Now lets look at some more annuity situations where you might want to solve for number of periods (Nper) and required rate of return (Rate).

Let's first do an Nper calculation to update Example 7, originally given in Section 2.4 of this manual. You will remember that you calculated the economic frequency of inspecting a sewer pipe. A footnote following Example 7 noted that the analysis did not take into account the time value of money. Here's the example again, this time solved with the time value of money taken into account.

Example 19: How often to clean? (revisited from Example 7)

A 200-foot segment of 8-inch VCP serves the sewer needs of a suburban street. Given its age and past experience, the chance of unexpected failure of this pipe segment within the next ten years is about two percent. Internal and community costs of an unexpected failure of this type of sewer, over and above the cost of a planned replacement, is $50 per foot, or $10,000—and this assumes that the entire segment would need to be replaced. One additional fact not given in Example 7: Your department's required rate of return is three percent. How often should your department CCTV this pipe if CCTV inspection costs $1.25 per foot?

Let's do the numbers: The probability of structural failure of this pipe segment in any one year is 0.1 (once in ten years) times 0.02 (two percent chance), or 0.002. The cost of failure is $10,000. So the risk cost of ownership arising from structural failure is $20 per year.

The cost of averting the unexpected failure is 200 feet times $1.25 per foot or $250. So, using annuity analysis, you need to determine how many annual risks of $20 you need to expose your community to before a $250 investment is justified at the required rate of return of three percent.

Once again using Excel's help screens, you find that the proper format is **NPER**(**rate**, **pmt**, **pv**, fv, type). So you click on a blank cell and type in =NPER(.03,20,-250). You hit the return key and see:

15.901

In other words, the economic cleaning interval for this low-risk line is about 16 years. This compares with the Example 7 analysis, not taking the time value of money into account, that suggested a 12.5-year interval.

A final thing to note. If you take the cost of money as zero and type in =NPER(0,20,-250), you will get 12.5 years, exactly the answer you got in Example 7.

You've now looked at annuities three of four possible ways, so let's try an example of the fourth. Using the Rate function, you can determine whether an asset investment yields your required rate of return.

Example 20: More gas is good!

Your department is considering an upgrade to a digester methane recovery system that will yield additional gas for cogeneration and offset natural gas purchase. The upgrade, which costs $250 thousand, will reduce natural gas purchases by $24 thousand a year (after taking new O&M costs into account) over the 20-year life of the upgrade. Will this investment yield the required rate of return of 5 percent?

Let's do the numbers: You know the annual benefit (payment) of $24 thousand, the number of periods at 20 years, and the present value of the project, a negative (because it's an investment or outflow) of $250 thousand. You need to solve for the rate of return (we'll use Excel's Rate function) and see if it is higher than the required rate of return of 5 percent.

Using Excel's help screens, you find that the proper format is **RATE(nper,pmt,pv**,fv,type,guess). Ignoring the optional parameters as before, you click on a blank cell and type in =RATE(20,24000,-250000). You hit the return key and see:

.07218

In other words, the return on your investment (or ROI) will be 7.2 percent if everything works out as planned. Since this exceeds your required rate of return, and if there are no serious risk factors left to consider, you will go ahead with the upgrade.

APPENDIX D: DISCOUNT RATES

The discount rate is simply the rate of return required by an investor to justify an investment. For example, if you are happy earning four percent in a bank with an insured deposit, it is unlikely that you will want to invest in a proposition that will yield only three percent.

Discount rates used by public utilities are typically the same as the borrowing rates expected over the next several years. Your Asset Management Coordinator can supply you with the rate currently used by your department

OTHER APPROACHES TO DISCOUNT RATES

Aside from using the long-term cost of borrowing, are other ways to set discount rates:

- Some believe that using a long-term expected borrowing rate is inappropriate because the purpose of present value analysis is to evaluate the worth of an investment *today*, and therefore today's borrowing rate is the only relevant one.

- Others use the opportunity cost of investing in low-risk financial instruments rather than the borrowing rate, because they are using their customers' cash to create new assets when they could be investing it for an assured financial return instead.

- The "textbook" approach, theoretically sound but seldom encountered among public utilities, is to use the weighted cost of capital. For a public utility, this would be a mix of the borrowing rate and the return customers might expect if they rather than the utility were to invest the cash.

In this country, there is no consensus on discount rates in the water and wastewater industry. In fact, many utilities do not use present value analysis at all. Here, however, are some discount rates used by United States utilities known to the author of this manual:

- Orange County Water District (CA)—4.5 percent, based on the current borrowing rate.

- Montecito Sanitary District (CA)—6 percent, based on the expected long-term borrowing rate.

- Dublin San Ramon Services District (CA)—6 percent, based on the expected long-term borrowing rate.

- Metropolitan Water District of Southern California—5.5 percent, based on foregone investment opportunities.

- Massachusetts Water Resources Agency (MWRA)—6 percent, based on the expected long-term borrowing rate.

As can be seen, the rates fall within a very narrow rang, even though they have different bases. The courses of action suggested by BCE analyses are often not particularly sensitive to the discount rate used and will not change even with discount rates well outside this range.

SHOULD NOMINAL OR REAL VALUES BE USED?

As a preface to this discussion, there are three possible components to a discount rate: The risk-free cost of money, expected inflation, and a risk premium.

- *Risk-free cost of money*—This is what the cost of borrowing would be in a world where no inflation was expected and for a project that had no risks.

- *Expected inflation*—This is the general rate of inflation (*i.e.*, rise in prices) expected during the period of the analysis.

- *Risk premium*—Many or most projects have some risk, so a risk premium may be used in some cases (see discussion further on).

You may want to consider all three when thinking about discount rates.

Example 21: A life decision.

You want to buy a home. You find that a 30-year fixed rate mortgage will cost you seven percent. This seven percent is simply the lender's required rate of return for a loan to a person with an income and credit profile like yours. Here's how the seven percent might break down:

Risk-free cost of money:	3.5%
Expected inflation:	2.5%
Risk premium:	1.0%
Total mortgage cost:	7.0%

Putting the risk premium aside for the moment, the question is often asked, "Should I use unescalated cash flows (so-called 'real dollars') in my analysis, or should I escalate the case flows ('nominal dollars')?"

In fact, either nominal dollars can be used for each time period and then discounted with a nominal discount rate, including inflation, or real cash flows can be used discounted by a "real" discount rate without inflation. There is no inherent reason to choose one rather than the other as both will provide the about the same answers. The important factor is that real and nominal cash flows and discount rates must never be mixed in one evaluation. Where

cash flows are in real or unescalated terms, only the real discount rate should be used. Where nominal or escalated cash flows are used the nominal discount rate must be used.

In fact the White House Office of Management and Budget in Circular No.A94 "Guidelines and Discount Rates for Cost Benefit Analysis" says:

> ***Real versus Nominal Discount Rates****. The proper discount rate to use depends on whether the benefits and costs are measured in real or nominal terms.*
>
> 1. *A real discount rate that has been adjusted to eliminate the effect of expected inflation should be used to discount constant-dollar or real benefits and costs. A real discount rate can be approximated by subtracting expected inflation from a nominal interest rate.*
>
> 2. *A nominal discount rate that reflects expected inflation should be used to discount nominal benefits and costs. Market interest rates are nominal interest rates in this sense.*

Let's see how significant the difference between real and nominal approaches is by way of an example.

Example 22: Real versus nominal: Does it matter?

A pump has an energy cost of $1,000 a year. What is the PV of energy costs over ten years? Calculate this using both real and nominal approaches. The real cost of money is 3.5% and expected inflation is 2.5%.

Let's do the numbers. The table below shows both the real and nominal approaches. In the real approach, the energy cost does not escalate and only the real cost of money (3.5%) is used to discount costs. In the nominal approach, the cost of energy escalates at 2.5% annually and the nominal cost of money (real cost plus expected inflation) is used to discount costs.

Real cost of money:		3.50%		3.50%
Inflation:		0.00%		2.50%
Discount rate used:		3.50%		6.00%
	Real		Nominal	
	Amount	PV	Amount	PV
1	$1,000	$966	$1,025	$967
2	$1,000	$934	$1,051	$935
3	$1,000	$902	$1,077	$904
4	$1,000	$871	$1,104	$874
5	$1,000	$842	$1,131	$845
6	$1,000	$814	$1,160	$818
7	$1,000	$786	$1,189	$791
8	$1,000	$759	$1,218	$764
9	$1,000	$734	$1,249	$739
10	$1,000	$709	$1,280	$715
Total PVs:		$8,317		$8,353

The difference is only $36, or about 0.4%. This is insignificant given the usual margins of error in estimating benefits and costs of a project. It is better to concentrate on getting the benefits and costs down accurately than to worry about the "real versus nominal" issue!

The NPV Tool currently used by the departments will support either approach. If you want to work in real dollars simply enter an inflation-free discount rate *(e.g.*, 3.5%) and an inflation rate of zero. If you prefer nominal dollars, enter a nominal discount rate (*e.g.*, 6%) and inflation at the rate actually expected (*e.g.*, 2.5%).

Your Asset Management Coordinator can supply the best numbers to use in either case.

INCLUDING A RISK PREMIUM IN THE DISCOUNT RATE

Sometimes a risk premium, typically two to four percent, is included in the discount rate to reflect risks of not achieving in full the benefits anticipated. A simple example in everyday

life is the risk premium that results in high yields from “junk” bonds. The premium in this case reflects the risk that the borrowing company will be unable to complete repayment on the bonds or that repayment will be materially delayed.

For a public utility project, the risk premium takes in a range of factors that would not normally be covered by project specific contingencies:

- Political stability
- Changes in inflation/cost of capital
- Likelihood of regulation change (environmental, safety)
- Input costs (such as power and materials)
- Impact of changes in technology
- Possibility that labor charges grow faster than inflation
- Capability of management to deliver project on time and budget.

Here's an example of using a risk premium.

Example 23: But will it really work?

The addition of an emergency generator costing $130,000 with a 30-year life should reduce spills at a sewer lift station resulting from power outages during storms. A typical spill is rather large and has a value of $100,000. Power-related spills currently occur about once every ten years; the emergency generator may eliminate such spills entirely. At other stations, however, transfer switch failures and other problems have shown that the emergency generator is not a panacea. Will the generator be justified if your normal discount rate is five percent? With a two percent risk premium? Ignore generator maintenance costs.

Let's do the numbers. You expect that by adding the generator we will avoid a risk cost of spills of $10 thousand a year ($100 thousand divided by ten years). But there is a risk that the benefits (avoided spill costs) will not be totally realized. The table below shows the value of the benefits at your base discount rate of five percent and also at seven percent, which includes the two percent risk premium. Calculations are done with Excel's PV function.

Risk-free discount rate:	5%
Risk premium:	2%
Analysis period:	30
Cost per spill:	$100,000
Interval in years:	10
Annual spill risk cost:	$10,000

	No Risk Premium	With Risk Premium
Discount rate used:	5%	7%
PV of benefits:	$153,725	$124,090

At your no-risk discount rate, the generator is justified since its benefits are greater than its cost. However, if you reflect the risk that the benefits will not be totally realized by adding a risk premium to the discount rate, then the generator's $130 thousand cost is not supported.

You can also address risk by entering a negative percentage value into the "Benefit risk" entry next to this alternative in the department's NPV Tool, which will reduce the $10 thousand benefit. This will likely have the same impact.

If you want to use a risk premium, make sure that it is used *only* when the project is an investment you are making now in order to achieve fully quantified future benefits that you expect to justify the expenditure. This is often not the case as many projects will *not* have fully costed benefits. Two examples:

- Some projects will have well-defined costs and you will be trying to determine if those costs on a present value basis support a "reasonable person" test that they are reasonable when compared with the expected but unquantified benefits. See Examples 2 and 6 in this manual.

- Other projects may be mandated for various reasons, or the risks being addressed are so severe that they need to be addressed even without a quantified estimate of benefits. In this case, the analysis is looking for the lowest life- cycle cost solution.

In either case, if a risk premium is used you will be reducing not future benefits but future costs, just the opposite of the effect you are trying to achieve.

The NPV Tool normally used by the departments supports the use of risk premiums that can be applied to alternatives individually. In most cases, however, risk can be handled better by adjusting the expected costs and benefits on an alternative-by-alternative basis (see discussion in Section 3.2, above).

APPENDIX E: FITTING YOUR CAPITAL PROGRAM TO YOUR CUSTOMERS' NEEDS

Authors:
V. Kenneth Harlow, Vice-president, Brown and Caldwell, Irvine, California
Peter Dennis, Manager, Process and Operations, Hunter Water Australia
Ruben Robles, Senior Civil Engineer, Sacramento Regional County Sanitation District
Brian True, Associate Civil Engineer, Sacramento Regional County Sanitation District

WEF/AWWA Joint Management Specialty Conference
Session 15, March 16, 2004, 10:30 AM

ABSTRACT

The Business Case Evaluation (BCE) methodology is a key element of any asset management program. Applied to capital projects, it ensures that a utility has correctly identified the problem and defined an approach to solving it that best serves the customer.

The Sacramento Regional County Sanitation District (SRCSD), a large conveyance and treatment agency in California's Central Valley, recently applied the BCE methodology to two projects, well advanced in design, with a total capital cost of $75 million. One project was deferred, for an immediate capital savings of $60 million and a minimum whole-life present value savings of $12.5 million. The other, described in this paper, was re-defined for a capital savings of $3.5 million and a whole-life present value savings of $7.5 million.

SRCSD is now moving to integrate the BCE into its capital formation process and apply it more broadly within the organization.

Significant capital investments entail ongoing operating and capital costs over many years. Every addition to a utility's plant has an impact on costs and rates that will be felt for a very long time. Thus, it behooves responsible utility managers to make sure that their investments are the right ones, that they are truly needed, and that they benefit the customer. The BCE methodology is designed to those ends.

BACKGROUND

The Sacramento County Regional County Sanitation District (SRCSD) and County Sanitation District-1 provide wastewater conveyance and treatment to 1.2 million customers in the Sacramento region. Through its benchmarking efforts and a high level assessment of its collection system and treatment plant infrastructure, SRCSD has identified a need to better manage its aging infrastructure in order to make more cost

effective use of its available resources. In addition, there is the need to improve decisions regarding asset creation for a capital improvement program estimated at over $1.5 billion.

SRCSD has identified a comprehensive Asset Management Program (AMP) as the most effective and proven means of meeting its stated goals. The first stage of its AMP is the Strategic Planning Phase that was begun in June 2003 with consultant assistance. The Strategic Planning Phase encompasses the training and education of staff, the formation of AM working teams, an assessment of current asset management-related practices, a significant "visioning" process, and ultimately the formation of AM Strategic and Implementation Plans.

As a prelude to the development of the AMP, SRCSD asked its AMP consultants, Brown and Caldwell and Hunter Water Australia, to help staff evaluate two proposed capital projects:

- The **Primary Treatment Reliability Project** (PTRP), a $60 million project involving new primary sedimentation tanks and grit system improvements at the Sacramento Regional Wastewater Treatment Plant; and

- The **Upper Dry Creek Relief Interceptor Project** (UDCRIP), a $14 million project involving a new interceptor and pump station to provide additional conveyance capacity from a suburban area near Sacramento.

The methodology chosen was the Business Case Evaluation (BCE), which is further explored in this paper. The BCE is based on whole-life cost analysis, using present value analysis to "bring back" cost and revenue streams extending over many years to a single equivalent value today.

The results of the two evaluations were more than encouraging:

- Evaluation of the first project (the PTRP) resulted in staff's recommendation that the project be deferred until required by increased flows, resulting in an immediate capital savings of $60 million and an overall whole-life present value savings, worst case (that is, shortest deferral), of about $12.5 million.

- Evaluation of the second project (the UDCRIP) resulted in a reformulation of that project with an immediate capital savings of $3.5 million and a whole-life present value savings of $7.5 million.

This paper limits its scope to the second project for two reasons: (1) Most of the work was performed by SRCSD staff; and (2) the broad range of alternatives put forward and

considered illustrates the creativity and fresh approaches that capable utility staff can bring to matters long considered "closed."

SRCSD considers its first two BCEs to have been highly successful. Although SRCSD had regularly done cost analyses of significant projects, these had not typically included a highly structured methodology such as the BCE or reviews by cross-functional teams with the ability to identify and evaluate all possible alternatives.

To complete this introduction, we note that both projects were at the 30% design stage and RFPs for final design were being prepared. Nevertheless, through use of the BCE process, staff was able to recommend the deferral of one project and the reformulation of the other, for an immediate capital savings or deferral of over $60 million and a whole-life present value savings of at least $20 million. Management accepted both recommendations, and so these savings were realized.

INTRODUCTION TO THE BUSINESS CASE EVALUATION

Briefly stated, the Business Case Evaluation (BCE) is a general approach to making asset decisions. Although applied to capital investment decisions in this paper, it is just as appropriate to analysis of maintenance frequencies, eligibility for condition assessment, replace or repair, and other asset decisions that utility personnel face on a day-to-day basis.

From a capital point of view, it is important to understand that a BCE is not performed on a *project*; it is performed on a *problem*. So the BCE proceeds through a series of questions:

First question: What's the problem?

> Not necessarily as simple as it sounds, as we will see below.

Second question: What are the alternatives for dealing with this problem?

> Assuming we have determined that the problem is real, creativity now comes into play. Again, we will see this below. Also note a very important alternative that is always thrown into the mix: Do nothing.

Third question: How well does each alternative address the problem given the economics, effects on service levels, and risk?

> Here, of course, is where the analysis starts. A rule: *Avoid overkill*. Very often, and in both BCEs performed by the Districts, simple economic analysis will yield the proper answer. The BCE can obviously be expanded to be quite comprehensive, but that takes time and resources. *If you want a cost-effective solution, you should also be sensitive to the cost-effectiveness of the analysis*.

Before leaving the subject of the BCE, we want to make four points regarding its use:

1. The BCE is *not* a way to prioritize projects. It is a way to determine if a project is needed or not, and to define the most effective project *from the customer's point of view*. Consistent use of the BCE means the end of "continuation budgeting" for capital. A project is either justified (and should be budgeted) or it is not. The commonly-seen approach of prioritizing projects and cutting the list off at last year's expenditure level no longer applies.

2. While it shares some features in common with value engineering, the BCE is different in several ways: (1) It is normally performed internally as part of normal business processes and is a "businessman's" review rather than an exercise for an "expert"; (2) it always starts from first principles and is always applied to a problem rather than a project; and (3) it is uncompromisingly tied to the customer's interests.

3. The BCE is not a one-time exercise. It is (or should be) performed at several stages in the project development cycle. All utility managers have experienced projects that "took on lives of their own." A continuing BCE program, integrated into the capital formation process, ensures that capital expenditures, as projects change and are refined, remain commensurate with the benefits that they bring to customers.

4. As a utility develops its asset management program, it will find that it needs to define costs for untoward events such as equipment failures, overflows, and even permit violations. Without knowing these costs, there is not *and never will be* a valid method to determine how much money should be expended to avoid untoward events. As these costs are developed, BCEs become complete benefit/cost analyses where risk costs are fully quantified and risk amelioration costs can be set against the benefits of avoiding the risks. The BCEs described in this paper do not go that far. But they go far enough to support rational decisions that minimize risk and provide benefit to the customer.

BACKGROUND TO THE BCE: THE UDCRIP

The Upper Dry Creek Relief Interceptor Project (UDCRIP) was intended to add wastewater conveyance capacity to serve a northern Sacramento County Sanitation District #1 (CSD-1) sewershed area termed Dry Creek-11 (DR-11).

The additional capacity was deemed necessary because the existing interceptor serving DR-11 (Upper Dry Creek Interceptor, or UDCI), a 24-inch and 27-inch gravity line, was surcharging on a daily basis with the diurnal peak, a situation exacerbated by periods of heavy rainfall. The problem was expected to grow worse as additional development occurred in DR-11.

The proposed UDCRIP did not parallel the alignment of the existing UDCI but cut south along a shorter path to meet the Upper Northwest Interceptor segment 5 (UNWI-5 in the map below), now in the development stage. The UDCRIP was to be a 36-inch line with a lift station placed midway due to terrain. Both interceptors are shown in the map below.

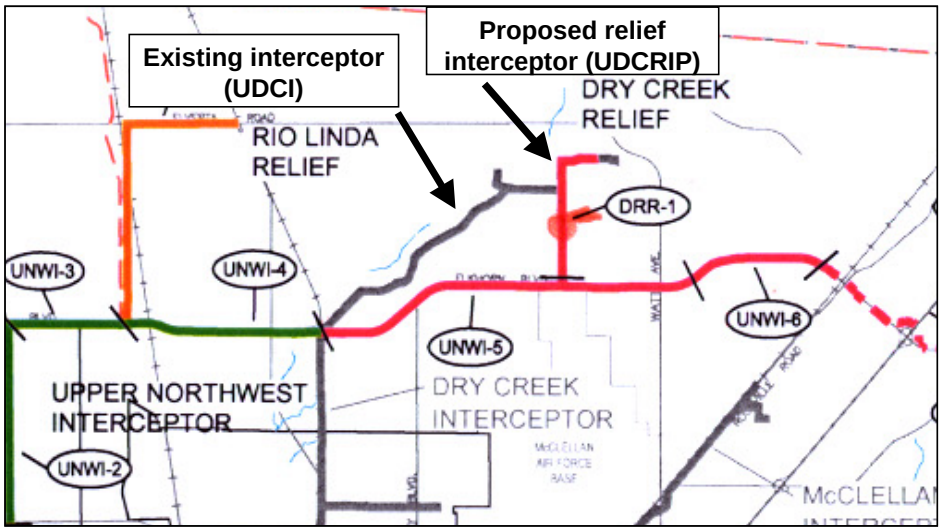

Locations of the Existing UDCI and Proposed UDCRIP

The UDCRIP, like other alternatives discussed in this paper, was expected to result in sufficient total conveyance capacity to serve DR-11 through ultimate buildout, roughly estimated at 2050.

As noted earlier, the proposed UDCRIP had completed 30% design and an RFP was being prepared for final design, based on the concept of a 36” pipe with a pumping station midway (DRR-1 in the map on the previous page).

The UDCRIP, like other alternatives discussed in this paper, was expected to result in sufficient total conveyance capacity to serve DR-11 through ultimate buildout, roughly estimated at 2050.

DO OUR CUSTOMERS NEED THIS PROJECT?

SRCSD assembled a Business Case Evaluation Team (the Team) to examine the drivers for the UDCRIP and to determine if there were other alternatives that met project needs while being less expensive, in terms of whole-life costs of ownership, or were more effective in other ways.

The Team first addressed the underlying problem, or the need for the project. The Team quickly determined that not only was the existing UDCI surcharging in heavy rains, but that the surcharging was contributing to upstream overflows that had been observed by field personnel. Possible future consequences of these overflows included fines and a worsened regulatory climate for SRCSD.

Although SRCSD did not have a formal policy regarding overflows, the Team believed that failing to prevent them, when avoidable, did not meet reasonable customer service standards. Further, such overflows might be construed as violations of the Clean Water Act, resulting in fines or other enforcement actions.

In summary, the Team determined that not responding to the situation that created the impetus for the UDCRIP was not a viable option for SRCSD. The surcharging and overflows were *not acceptable* in terms of the levels of service that the Team presumed SRCSD was committed to providing its member agencies.

ALTERNATIVE APPROACHES TO SOLVING THE PROBLEM

The Team ultimately defined *no fewer than fifteen alternatives* to address the identified customer service problem, including the currently planned UDCRIP, and subjected seven to detailed quantitative examination.

The fifteen alternatives fell into five classes, numbered to correspond to the subsections in the Team's final report. Those that were deemed worthy of quantitative analysis are so identified below; others were determined to have "fatal flaws" early in the examination process and were not analyzed for life cycle cost of ownership.

A listing of all the alternatives follows:

- *Non-construction alternatives*—approaches to solving the problem that did not involve capital outlays.

- ✓ Alternative 3-1 – Do nothing (fatal flaw)
- ✓ Alternative 3-2 – Dry Creek connection moratorium (fatal flaw)

- *Use current UDCI alignment*—primarily approaches that did not require a new alignment and optimized capacity in the existing alignment.
  - ✓ Alternative 4-1 – Reduce Dry Creek infiltration and inflow (fatal flaw)
  - ✓ Alternative 4-2 – Parallel existing interceptor with gravity pipe (fatal flaw)
  - ✓ Alternative 4-3 – Expand diameter of current interceptor, bursting (fatal flaw)
  - ✓ Alternative 4-4 – Convert UDCI to force main (examined)

- *Use proposed UDCRIP alignment*—approaches using the proposed UDCRIP alignment.
  - ✓ Alternative 5-1 – Pipe plus lift station, as planned (base case—examined)
  - ✓ Alternative 5-2 – Redefine current project as gravity pipe (examined)

- *Peak-shaving storage*—using the disused Highlands Wastewater Treatment Plant, obviating the need for increased conveyance capacity.
  - ✓ Alternative 6-1 – Storage capacity to 2010 (fatal flaw)
  - ✓ Alternative 6-2 – Sub-grade storage to 2050 (examined)
  - ✓ Alternative 6-3 – Above-grade storage to 2050 (examined)
  - ✓ Alternative 6-4 – Above-grade storage, phased capacity (examined)

- *Upstream treatment and reclaimed water sales*—another form of "scalping" but with beneficial reuse of flows.
  - ✓ Alternative 7-1 – Reclamation for landscape irrigation, winter storage (fatal flaw)
  - ✓ Alternative 7-2 – Reclamation for landscape irrigation, winter surface discharge (fatal flaw)
  - ✓ Alternative 7-3 – Reclamation for year-round industrial end users (examined)

Several of these alternatives showed great creativity and promise. Of particular note were:

- *Alternative 4-3*: This involved **large-diameter pipe bursting**, a newer technology with a short track record. The Team ultimately decided that the technical risks in this approach were too great, especially since there were more economically promising alternatives.

- *Alternative 4-4*: Here the concept was to **slipline the existing interceptor** and built a small pump station to turn it into a force main, increasing conveyance capacity. Even though closer investigation showed that three separate pump

stations would be required, this alternative retained its attraction and its economics were analyzed.

- *Alternative 5-2*: Upon investigating the proposed UDCRIP, the Team decided to examine whether **lowering the receiving interceptor** somewhat might eliminate the need for a pump station entirely.

- *Alternative 6 (all)*: The Team considered several configurations and phasings for **interim peak-shaving storage** above the existing interceptor. A disused treatment plant was available that could provide siting for pumping facilities and either sub-grade or above-grade storage. These alternatives appeared quite attractive economically.

- *Alternative 7 (all)*: **Beneficial reuse** was considered in the same light, as a way to reduce peak flows and obviate the need for increased conveyance capacity.

For those alternatives deemed worthy of quantitative examination, the methodology was:

- Estimate the alternative's capital cost and the year the alternative could most likely be placed in service. Some alternatives involved phased investment, so the years and costs of subsequent phases were estimated as well.

- Estimate the annual running costs of the alternative, by year, from start-up through the year 2052. For alternatives involving pumping or phased investment, these costs typically increased over the fifty-year period due to anticipated increases in sewage flow. The fifty-year period (2003 through 2052) was chosen because the various alternatives had differing cost patterns related to flow increases, which were expected to stabilize at build-out in 2050. Thus the fifty-year period ensured that all the alternatives were viewed on an equal basis.

- Define likely types of capital reinvestment (refurbishment) needed periodically by the alternative. These activities, such as tank coating or major pump repair, are distinct from annual running costs in that they are normally assigned to the capital budget and take place at intervals longer than a year. For each type of refurbishment, estimate the cost and typical interval in years

- For alternatives with ancillary benefits other than meeting basic project needs, estimate the dollar values of these benefits from start-up through the year 2052 (applied only to beneficial reuse alternatives).

- Since the above estimates were made in year 2003 dollars, escalate all costs and benefits to reflect the effects of inflation (three percent was used in this analysis).

- Calculate, for each year, the net ownership costs—capital investment plus annual running costs plus capital reinvestment minus ancillary benefits (if any).
- Discount the net annual ownership costs to year 2003 dollars at a rate of five percent, approximately equal to District's borrowing cost, to yield a single net present value of lifecycle ownership costs. Net present value is the accepted method of evaluating future costs and benefits, when expressed in dollar terms, from the standpoint of the present.
- Review project risks in qualitative terms to indicate the directions for further analysis of the alternative prior to making a final decision.

With respect to the risk review, the Team classified possible risks of each alternative examined into five categories:

- **Technical risk** – Alternative won't work, or won't work sufficiently well.
- **Customer service risk** – Alternative won't totally solve the problem, or it may create new problems (spills, odors, etc.).
- **Capital cost risk** – Alternative will cost more to implement than expected.
- **Running cost risk** – Alternative will cost more to own after construction than expected.
- **Benefit risk** – Alternative won't fully achieve planned ancillary benefits (applicable to Alternative 7-3, industrial reclaimed water, only).

A more sophisticated BCE might have quantified these risks in terms of *risk costs*, or that portion of asset ownership costs representing the probability and consequence of undesired events or outcomes. However, since SRCSD had not yet developed the necessary background to do this, each alternative was evaluated numerically in the five risk areas, and the risk profile of each approach was considered qualitatively rather than quantitatively.

This did not turn out to be a drawback since the economically preferred alternative (see below) was also, intuitively, the lowest risk alternative.

To perform the whole-life cost analysis, the Team used a template developed for this project. The template discounted annual ownership costs through the year 2052 back to a year 2003 basis so that the present values of the whole-life costs of the alternatives could be compared. A small portion of the template is shown in the figure below.

From Summary Sheet:		Sensitivity analysis (+/- percent):	
Year of analysis	2003	Capital cost	
Escalation rate	3%	M&O cost	
Discount rate	5%	Benefits	

Analysis Parameters

Risk Factors

Expressed in 2003 dollars, unescalated	2003	2004	2005	2006	2007	2008	2009	2010	2011	2012	2013
Facility Costs				13,836							
O&M Costs:											
M&O					74	74	74	74	74	74	74
Power					1	1	1	1	2	2	2
Chemicals					7	7	7	7	9	9	9
Compliance monitoring					4	4	4	4	4	4	4
Unexpected events					10	10	10	10	10	10	10
Other											
Other											
Other											
Total O&M					96	96	96	96	99	99	99
Refurbishments:											
Pump refurbishment							10			10	
Site maintenance											
Other											
Other											
Other											
Total refurbishments							10			10	
Total costs				13,836	96	96	106	96	99	109	99

Capital Cost

Annual Running Costs

Capital Refurbishments

Template (small portion) used in Whole-life Cost Analysis

In the view of the Team, the alternative with the lowest net present value of whole-life ownership costs, if it otherwise met service requirements and did not entail undue risk or have other adverse impacts, would be the best solution to the problem because it met the needs of SRCSD's customers' needs in the most cost-effective manner.

RESULTS OF THE ANALYSIS

The results are shown in the figure below. Alternative 5-1 is the base-case UDCRIP project as originally planned, so the present values of the whole-life costs of the other alternatives are compared with that alternative.

Sacramento Regional County Sanitation District
Upper Dry Creek Relief Interceptor Project
Life Cycle Alternative Cost Analysis
Summary of Alternatives

Alternative	Name	Year in Service	Capital Cost (thousands)	50-yr NPV (thousands)	Savings over 5-1
Use Current UDCI Alignment:					
4-4	Convert Existing Interceptor to Force Main	2009	$14,745	$17,611	0%
Use Proposed UDCRIP Alignment:					
5-1	Currently Planned Interceptor and Lift Station	2007	$13,836	$17,524	0%
5-2	Currently Planned Alignment, Gravity Flow	2006	$10,418	$10,030	43%
Peak-shaving Storage at Highlands WWTP:					
6-2	Off-line Peak Storage, Sub-grade Basin	2008	$8,979	$16,468	6%
6-3	Off-line Peak Storage, Above-grade Tanks	2008	$9,622	$15,722	10%
6-4	Off-line Peak Storage, Phased Above-grade Tanks	2008	$9,709	$15,005	14%
Upstream Treatment and Reclaimed Water Sales					
7-3	Industrial Reclaimed Water	2010	$35,206	$32,082	-83%

Summary of Alternatives and Costs

Some observations on this analysis:

- As expected, the beneficial reuse alternative fared poorly because of the high capital and running costs. Since SRCSD is only in the initial stages of formulating its beneficial reuse plans, the Team did not believe the time was right to judge that the high costs were worth the social and other unquantified benefits that might be gained.

- Of the remaining alternatives, *all* were at least as economical as the UDCRIP as currently defined. In fact, four of the alternatives were clearly preferable on economic grounds.

- This BCE did *not* select the alternative with the lowest capital cost. Three alternatives had lower initial costs than the alternative with the lowest whole-life cost.

- Alternative 5-2 was the clear winner. This alternative involved lowering the receiving interceptor and removing the pumping station from the design, but still used the planned UDCRIP alignment and kept the 36” pipe intact. The present value of its whole-life costs was a *full 43 percent lower* than the UDCRIP as originally planned.

- Also in Alternative 5-2’s favor were two additional factors: (1) The project risk signature was improved because of the elimination of the pumping station; and (2) the project could be put into place a year earlier, thus more quickly solving what the Team had determined was a serious customer service problem.

The Team recommended that the UDCRIP project be redefined in this manner, and management accepted the recommendation. Thus, SRCSD's BCE Team saved the District's customers over $3.4 million in up-front capital cost, saved about $7.5 million in whole-life costs on a present value basis, and solved a real customer service problem more quickly and with lower risk.

SRCSD has since applied the BCE methodology to other projects. As part of its asset management program development, it has also established a CIP Team charged with preparing the procedures necessary to integrate the BCE into its overall capital formation process.

LESSONS LEARNED

1. The BCE, although time consuming, can be a high-value exercise. In SRCSD's case, best estimates are that the total cost of the first two BCEs was about $150 thousand in consultant and staff time. However, present value savings (and these are real savings, just as surely as if a check had come in the mail) were *at a minimum* $20 million, and will be much more if the larger project, the PTRP, can be deferred longer than expected. Thus the payback on the resources expended was at least 130 to one.

   SRCSD's future BCEs will be far more economical to undertake since the methodology is now understood and accepted, templates have been prepared, and the library of running costs has been partially developed.

2. An agency should not be wedded to a project even though identified in the master planning process. Situations, costs, technologies, demand, and the surrounding infrastructure are all subject to change. This is why the BCE should be performed at various stages in project development. Possible BCE points for major projects might be during the master plan, prior to pre-design, prior to design, and even after the bid in case costs have moved the wrong way.

3. Projects change and mutate. They often grow more expensive due to "scope creep" and other factors to the extent that they may bear little resemblance to what was originally envisioned. The BCE, if applied programmatically, can place a reliable control over project growth.

4. Quantification of project risks and social costs can be difficult, but the benefits of a newly considered alternative may be so great as to overshadow other non-financial factors. In many cases, the BCE will be very simple as a result.

5. BCEs can have major financial benefits and can also improve levels of service provided customers. Agencies should include their communications and media

officers on BCE teams to ensure that customer considerations are fully taken into account and that effective communication takes place.

6. O&M personnel can make particularly valuable contributions to BCEs. They know what things cost, what works and what doesn't, and what assets cost to own (not just to build). Bringing O&M and engineering staff together in a BCE work environment adds a new and valuable dimension to the capital formation process.

7. There is a vast reservoir of knowledge among utility staff that may not be effectively tapped during consultant work on facilities and master plans. As a result, these plans may be less valuable than might be desired. *Considerably* increased staff participation in the capital planning process should be considered. This may not make planning exercises cheaper; but it will certainly improve the quality of planning and will help make sure that the CIP, where the *real* money is spent, is cost effective. This will be particularly true if a proven structure, such as the BCE, is used to facilitate staff participation.

REFERENCES

Harlow, V. Kenneth, Brown and Caldwell, "Assets and Allergies," site: http://www.bcwaternews.com/AssetMgt/AM06_Allergies.pdf.

"International Infrastructure Management Manual" National Asset Management Steering Group, C/- Ingenium Executive Officer, PO Box 118, Thames, New Zealand, Ph/Fax 64-7-868 3930, Email jeff@ingenium.org.nz, site: www.ingenium.org.nz/publications/iimm/

Interested? Bookmark Ken Harlow's Asset Management page:

http://www.bcwaternews.com/AssetMgt/

INLAND EMPIRE UTILITIES AGENCY*

*** A MUNICIPAL WATER DISTRICT**

COST ESTIMATE FOR CAPITAL BUDGET REQUEST

NAME of Project Here

Project No.

ITEM		*QTY.*	*UNIT*	*UNIT COST*	*COST*	*ADJUSTED COST*
Description of material, equipment, labor, etc.						
Pumping System based on 2 pumps		0	ea.	$ -		$0
Piping		0	l.f.	$ -		$0
Canope		0	ea.	$ -		$0
Demolition		0	l.s.	$ -		$0
		0	l.s.	$ -	$ -	
		0	l.s.	$ -	$ -	
		0	s.f.	$ -	$ -	
		0	tons	$ -	$ -	
		0	ea.	$ -	$ -	
		0	l.s.	$ -	$ -	
		0	ea.	$ -	$ -	
Permits	AQMD	0	ea.	$ -	$ -	
	T-22	0	ea.	$ -	$ -	
	Others	0	ea.	$ -	$ -	

Construction Cost Estimate	*$*	-
15% Overhead & Profit	$	-
8% Inflation	$	-
4% Bonds & Insurances	$	-
SUBTOTAL - CONSTRUCTION COSTS	*$*	-
10% CONTINGENCY	$	-
TOTAL - CONSTRUCTION COSTS	*$*	-
CEQA		
Design (15% of construction cost estimate)	$	-
Permits (5% of construction cost)	$	-
Const. Management (7% of construction cost)	$	-
Warranty (1% of construction cost)	$	-
SUBTOTAL - DESIGN and ADMINISTRATION COSTS	*$*	-
10% CONTINGENCY	$	-
TOTAL - DESIGN and ADMINISTRATION COSTS	*$*	-
TOTAL COST ESTIMATE	*$*	-

Inland Empire Utilities Agency

Capital Project Request / Business Case Evaluation Review

Project Information

Project Number		Fund
Initial ID		
Temp Proj #		**Priority**
App Proj #		

Type of Request	Location
☐ Initial	
☐ Amendment	

Project Classification

- ☐ Replacement/Refurbishment
- ☐ Capital Construction, Upgrade
- ☐ Expansion Construction
- ☐ Contributed Capital

Department Number

Department Name

BCE Lead

Key Contacts

Project Name: NAME of Project Here

Project Description:

Project Justification:

☐ Risk of Violating ☐ End of Life / Replacement ☐ Capacity ☐ Reduce Operating Cost

☐ Decrease Staff Time ☐ Increase Productivity

Drivers:

☐ Safety ☐ Environmental ☐ Regulatory ☐ Reliability

☐ _____

	Alternatives	Life Cycle Cost (NPV)	Fatal Flaw
1	[Short names of alternatives here]	$0	☐
2	0	$0	☐
3	0	$0	☐
4	0	$0	☐
5	0	$0	☐
6	0	$0	☐
7	0	$0	☐

Recommendation

Inland Empire Utilities Agency
NAME of Project Here
Alternatives Net Present Value Analysis

			Sensitivity Adjustments (%)			Results ($000s)		
Agency:	Inland Empire Utilities Agency							
Project/Problem:	NAME of Project Here	Risk Premium	Benefits	Capital Costs	Running Costs	Capital Cost	30-year NPV	Benefit over 'Do Nothing'
Alternative 1	[Short names of alternatives here]							
Alternative 2								
Alternative 3								
Alternative 4								
Alternative 5								
Alternative 6								
Alternative 7								
Alternative 8								
Alternative 9								
Alternative 10								
Alternative 11								
Alternative 12								

Year of analysis:	2006
Escalation rate:	4.00%
Discount rate:	4.00%

Make entries in yellow cells only.

Inland Empire Utilities Agency
NAME of Project Here
Life Cycle Alternative Cost Analysis ($000s)
Alternative 1 - [Short names of alternatives here]

From Summary Sheet:		**Risk adjustments (+/- percent):**	
Year of analysis	**2006**	**Benefits**	
Escalation rate	**4.00%**	**Capital costs**	
Discount rate	**4.00%**	**Running costs**	

	Year																													
	2006	**2007**	**2008**	**2009**	**2010**	**2011**	**2012**	**2013**	**2014**	**2015**	**2016**	**2017**	**2018**	**2019**	**2020**	**2021**	**2022**	**2023**	**2024**	**2025**	**2026**	**2027**	**2028**	**2029**	**2030**	**2031**	**2032**	**2033**	**2034**	**2035**
Expressed in 2006 dollars, unescalated																														
Capital Outlays																														
Other																														
Other																														
Other																														
Other																														
Other																														
Other																														
Total capital outlays																														
Benefits:																														
Other																														
Other																														
Other																														
Total benefits																														
Annual Running Costs:																														
Other																														
Other																														
Other																														
Other																														
Other																														
Other																														
Other																														
Other																														
Total running costs																														
R&R Costs:																														
Other																														
Other																														
Other																														
Other																														
Other																														
Total refurbishments																														
Net Benefit/(cost)																														
Expressed in escalated dollars with sensitivity adjustments																														
Capital Outlays																														
Other																														
Other																														
Other																														
Other																														
Other																														
Other																														
Total capital outlays																														
Benefits:																														
Other																														
Other																														
Other																														
Total benefits																														
Annual Running Costs:																														
Other																														
Other																														
Other																														
Other																														
Other																														
Other																														
Other																														
Other																														
Total running costs																														
R&R Costs:																														
Other																														
Other																														
Other																														
Other																														
Other																														
Total refurbishments																														
Net escalated benefit/(cost)																														
Life cycle cost analysis																														
PVs in 2006																														
NPV as of 2006																														

Inland Empire Utilities Agency
NAME of Project Here
Life Cycle Alternative Cost Analysis ($000s)
Alternative 2 -

From Summary Sheet:		**Risk adjustments (+/- percent):**	
Year of analysis	**2006**	**Benefits**	
Escalation rate	**4.00%**	**Capital costs**	
Discount rate	**4.00%**	**Running costs**	

	Year																													
	2006	**2007**	**2008**	**2009**	**2010**	**2011**	**2012**	**2013**	**2014**	**2015**	**2016**	**2017**	**2018**	**2019**	**2020**	**2021**	**2022**	**2023**	**2024**	**2025**	**2026**	**2027**	**2028**	**2029**	**2030**	**2031**	**2032**	**2033**	**2034**	**2035**
Expressed in 2006 dollars, unescalated																														
Capital Outlays																														
Other																														
Other																														
Other																														
Other																														
Other																														
Other																														
Total capital outlays																														
Benefits:																														
Other																														
Other																														
Other																														
Total benefits																														
Annual Running Costs:																														
Other																														
Other																														
Other																														
Other																														
Other																														
Other																														
Other																														
Other																														
Total running costs																														
R&R Costs:																														
Other																														
Other																														
Other																														
Other																														
Other																														
Total refurbishments																														
Net Benefit/(cost)																														
Expressed in escalated dollars with sensitivity adjustments																														
Capital Outlays																														
Other																														
Other																														
Other																														
Other																														
Other																														
Other																														
Total capital outlays																														
Benefits:																														
Other																														
Other																														
Other																														
Total benefits																														
Annual Running Costs:																														
Other																														
Other																														
Other																														
Other																														
Other																														
Other																														
Other																														
Other																														
Total running costs																														
R&R Costs:																														
Other																														
Other																														
Other																														
Other																														
Other																														
Total refurbishments																														
Net escalated benefit/(cost)																														
Life cycle cost analysis																														
PVs in 2006																														
NPV as of 2006																														

Inland Empire Utilities Agency
NAME of Project Here
Life Cycle Alternative Cost Analysis ($000s)
Alternative 3 -

From Summary Sheet:		Risk adjustments (+/- percent):	
Year of analysis	2006	Benefits	
Escalation rate	4.00%	Capital costs	
Discount rate	4.00%	Running costs	

	Year																													
	2006	2007	2008	2009	2010	2011	2012	2013	2014	2015	2016	2017	2018	2019	2020	2021	2022	2023	2024	2025	2026	2027	2028	2029	2030	2031	2032	2033	2034	2035
Expressed in 2006 dollars, unescalated																														
Capital Outlays																														
Other																														
Other																														
Other																														
Other																														
Other																														
Other																														
Total capital outlays																														
Benefits:																														
Other																														
Other																														
Other																														
Total benefits																														
Annual Running Costs:																														
Other																														
Other																														
Other																														
Other																														
Other																														
Other																														
Other																														
Other																														
Total running costs																														
R&R Costs:																														
Other																														
Other																														
Other																														
Other																														
Other																														
Total refurbishments																														
Net Benefit/(cost)																														
Expressed in escalated dollars with sensitivity adjustments																														
Capital Outlays																														
Other																														
Other																														
Other																														
Other																														
Other																														
Other																														
Total capital outlays																														
Benefits:																														
Other																														
Other																														
Other																														
Total benefits																														
Annual Running Costs:																														
Other																														
Other																														
Other																														
Other																														
Other																														
Other																														
Other																														
Other																														
Total running costs																														
R&R Costs:																														
Other																														
Other																														
Other																														
Other																														
Other																														
Total refurbishments																														
Net escalated benefit/(cost)																														
Life cycle cost analysis																														
PVs in 2006																														
NPV as of 2006																														

Inland Empire Utilities Agency

Capital Project Multi-year Budget Request

Express Dollars to nearest 000's

Project No. _____

Budget Approval:

Projection of five year appropriation

PROJECT PHASE DETAIL	Time Line (MM/YY) Start	Time Line (MM/YY) End	TOTAL BUDGET COST DETAIL: Construction/ Other Contracts	Direct Labor	Material & Equipment	Other Expenses	Contingencies	TOTAL PROJECT COSTS	FY 06/07 Projected Costs	FY 07/08 Projected Costs	FY 08/09 Projected Costs	FY 09/10 Projected Costs	FY 10/11 Projected Costs
A. Land								$ -					
B. Right-of-way								$ -					
C. Master Plan								$ -					
D. Pre-Design								$ -					
E. CEQA							$ -	$ -	$ -				
F. Design			$ -		$ -		$ -	$ -	$ -				
G. Construction Work						$ -	$ -	$ -	$ -				
H. Construction Mgmt			$ -			$ -	$ -	$ -	$ -	$ -			
I. Project Close out			$ -			$ -	$ -	$ -		$ -			
J. Materials & Equipment								$ -					
K. Administration								$ -					
L. Preliminary Evaluation								$ -					
M. Non-Compliance								$ -					
T. Warranty				$ -			$ -	$ -				$ -	
TOTALS			$ -	$ -	$ -	$ -	$ -	$ -	$ -	$ -	$ -	$ -	$ -

Inland Empire Utilities Agency
A MUNICIPAL WATER DISTRICT

8.3 Equipment Sole Sourcing Guidelines

8.3 Equipment Sole Sourcing Guidelines

Public Contract Code § 3400(b) spells out situations in which it allows sole sourcing. The statute allows sole sourcing for four reasons:

1) to conduct a field test or experiment of the product,
2) to match existing products in use on the Project,
3) to obtain a product that is only available from one source, and
4) to respond to an emergency.

However, before IEUA can resort to sole sourcing for one of these reasons, IEUA must determine that one of the four reasons applies and such a determination be approved by IEUA General Manager. Further, that finding must be described in the invitation for bids or request for proposals.

See GA.10 IEUA Board Approved Standardized Equipment for specific list approved by IEUA Board.

Inland Empire Utilities Agency
A MUNICIPAL WATER DISTRICT

8.4 Schedule of Values Sample Template

8.4 Schedule of Values Sample Template

INLAND EMPIRE UTILITIES AGENCY
CONSTRUCTION PROGRESS PAY ESTIMATE

	GENERAL CONDITIONS/REQUIREMENTS: Per Front End Documents/Specification Section											
	Mobilization - per Calif Contract Code											
	5% Earned pay to 5% of Contract	1	$ 54,750.00	LS	$ 54,750.00	0%	$ -	0%	$ -	0%	$ -	
	10% Earned pay to 7.5% of Contract	1	$ 27,375.00	LS	$ 27,375.00	0%	$ -	0%	$ -	0%	$ -	
	20% Earned pay to 9.5% of Contract	1	$ 21,900.00	LS	$ 21,900.00	0%	$ -	0%	$ -	0%	$ -	
	50% Earned pay to 10% of Contract	1	$ 5,475.00	LS	$ 5,475.00	0%	$ -	0%	$ -	0%	$ -	
	Bonds and Insurance	1	$ 38,000.00	**Act. Cost**	$ 38,000.00	0%	$ -	0%	$ -	0%	$ -	
	Approved Schedule of Values	1	$ 500.00	LS	$ 500.00	0%	$ -	0%	$ -	0%	$ -	
	Approved Baseline Schedule	1	$ 500.00	LS	$ 500.00	0%	$ -	0%	$ -	0%	$ -	
	Progress Meetings/Weekly	52	$ 1,000.00	Weekly	$ 52,000.00	0%	$ -	0%	$ -	0%	$ -	
	Stormwater Pollution Prevention Plan (SWPPP)	1	$ 1,000.00	LS	$ 1,000.00	0%	$ -	0%	$ -	0%	$ -	
	Construction Photographs - Monthly	12	$ 250.00	LS	$ 3,000.00	0%	$ -	0%	$ -	0%	$ -	
	Construction Photographs - Project Completion	1	$ 500.00	LS	$ 500.00	0%	$ -	0%	$ -	0%	$ -	
	Certified Payroll - Submitted Monthly	12	$ 250.00	Mos	$ 3,000.00							
	Record Drawings - Submitted Monthly	12	$ 250.00	Mos	$ 3,000.00	0%	$ -	0%	$ -	0%	$ -	
	As-Built Drawings - Project Complete	1	$ 1,500.00	LS	$ 1,500.00	0%	$ -	0%	$ -	0%	$ -	
	Confined Space Entry Program Submittal	1	$ 500.00	LS	$ 500.00	0%	$ -	0%	$ -	0%	$ -	
	Overall SCADA System Programming Workshop	1	$ 500.00	LS	$ 500.00	0%	$ -	0%	$ -	0%	$ -	
	Electrical I&C and Mechanical Workshop	1	$ 1,000.00	LS	$ 1,000.00	0%	$ -	0%	$ -	0%	$ -	
	Project Update Workshop at 70% Complete	1	$ 1,000.00	LS	$ 1,000.00	0%	$ -	0%	$ -	0%	$ -	
	Project Testing, Training, Startup & Commissioning Workshop	1	$ 1,000.00	LS	$ 1,000.00	0%	$ -	0%	$ -	0%	$ -	
	Material & Equipment Schedule - Final	1	$ 1,000.00	LS	$ 1,000.00	0%	$ -	0%	$ -	0%	$ -	
	O&M Volumized - Approved	1	$ 1,000.00	LS	$ 1,000.00	0%	$ -	0%	$ -	0%	$ -	
	Demobilization	1	$ 18,341.79	LS	$ 18,341.79	0%	$ -	0%	$ -	0%	$ -	
	SPECIAL CONDITIONS-NOT USED											
	DIVISION 1 GENERAL REQUIREMENTS- NOT USED											
	DIVISION 2 SITE WORK:											
	Basin 1	1	$ 9,000.00	LS	$ 9,000.00	0%	$ -	0%	$ -	0%	$ -	
	Drop Inlet	1	$ 71,280.00	LS	$ 71,280.00	0%	$ -	0%	$ -	0%	$ -	
	Drop Inlet- SubContractors	1	$ 5,130.00	LS	$ 5,130.00	0%	$ -	0%	$ -	0%	$ -	
	Basin 4	1	$ 74,925.00	LS	$ 74,925.00	0%	$ -	0%	$ -	0%	$ -	
	Basin 4C	1	$ 20,250.00	LS	$ 20,250.00	0%	$ -	0%	$ -	0%	$ -	
	Basin 4C-Sub Contractors	1	$ 1,755.00	LS	$ 1,755.00	0%	$ -	0%	$ -	0%	$ -	
	Basin 8	1	$ 107,055.00	LS	$ 107,055.00	0%	$ -	0%	$ -	0%	$ -	
	DIVISION 3 CONCRETE											
	Basin 1	1	$ 8,730.00	LS	$ 8,730.00	0%	$ -	0%	$ -	0%	$ -	
	Basin 1- SubContractors	1	$ 720.00	LS	$ 720.00	0%	$ -	0%	$ -	0%	$ -	
	Drop Inlet	1	$ 44,820.00	LS	$ 44,820.00	0%	$ -	0%	$ -	0%	$ -	
	Drop Inlet- SubContractors	1	$ 9,900.00	LS	$ 9,900.00	0%	$ -	0%	$ -	0%	$ -	
	Basin 4	1	$ 119,250.00	LS	$ 119,250.00	0%	$ -	0%	$ -	0%	$ -	
	Basin 4- SubContractors	1	$ 13,050.00	LS	$ 13,050.00	0%	$ -	0%	$ -	0%	$ -	
	Basin 4C	1	$ 37,350.00	LS	$ 37,350.00	0%	$ -	0%	$ -	0%	$ -	
	Basin 4C- SubContractors	1	$ 3,623.00	LS	$ 3,623.00	0%	$ -	0%	$ -	0%	$ -	
	Basin 8	1	$ 22,433.00	LS	$ 22,433.00	0%	$ -	0%	$ -	0%	$ -	
	Basin 8- Sub Contractors	1	$ 4,950.00	LS	$ 4,950.00	0%	$ -	0%	$ -	0%	$ -	
	DIVISION 4 NOT USED											
	DIVISION 5 METALS:											
	Basin 1	1	$ 3,150.00	LS	$ 3,150.00	0%	$ -	0%	$ -	0%	$ -	
	Drop Inlet	1	$ 8,055.00	LS	$ 8,055.00	0%	$ -	0%	$ -	0%	$ -	
	DIVISION 6 WOOD & PLASTICS: PER SPECIFICATION SECTION											
	DIVISION 7 THERMAL AND MOISTURE PROTECTION: NOT USED											
	DIVISION 8 DOORS & WINDOWS: NOT USED											

INLAND EMPIRE UTILITIES AGENCY
CONSTRUCTION PROGRESS PAY ESTIMATE

DIVISION 9 FINISHES: PER SPECIFICATION SECTION											
Basin 1	1	$ 3,150.00	LS	$ 3,150.00	0%	$ -	0%	$ -	0%	$ -
Drop Inlet	1	$ 2,250.00	LS	$ 2,250.00	0%	$ -	0%	$ -	0%	$ -
DIVISION 10 SPECIALTIES: PER SPECIFICATION SECTION:NOT USED										
DIVISION 11 EQUIPMENT: PER SPECIFICATION SECTION										
11000 Fabricated Sluice Gates										
Submittals	1	$ 4,000.00	4%	$ 4,000.00	0%	$ -	0%	$ -	0%	$ -
Equipment/Material Delivery	1	$ 75,000.00	LS	$ 75,000.00	0%	$ -	0%	$ -	0%	$ -
Installation/Labor	1	$ 25,000.00	LS	$ 25,000.00	0%	$ -	0%	$ -	0%	$ -
Start-up/Testing/Final Inspection	1	$ 3,000.00	3%	$ 3,000.00	0%	$ -	0%	$ -	0%	$ -
O&M Manual Approved	1	$ 4,000.00	4%	$ 4,000.00	0%	$ -	0%	$ -	0%	$ -
Training/ Professional Recording Per Section	1	$ 4,000.00	4%	$ 4,000.00	0%	$ -	0%	$ -	0%	$ -
DIVISION 12 NOT USED										
DIVISION 13 – SPECIAL CONSTRUCTION (INSTRUMENTATION/PROCESS CONTROL) NOT SHOWN										
DIVISION 14 HOISTING EQUIPMENT: NOT USED										
DIVISION 15 MECHANICAL:										
Drop Inlet	1	$ 68,274.00	LS	$ 68,274.00	0%	$ -	0%	$ -	0%	$ -
Need to list & distribute correctly										
Submittals	1	$ 8,008.00	4%	$ 8,008.00	0%	$ -	0%	$ -	0%	$ -
Equipment/Material Delivery	1	$ 200,000.00	LS	$ 200,000.00	0%	$ -	0%	$ -	0%	$ -
Installation/Labor	1	$ 200.00	LS	$ 200.00	0%	$ -	0%	$ -	0%	$ -
Start-up/Testing/Final Inspection	1	$ 6,006.00	3%	$ 6,006.00	0%	$ -	0%	$ -	0%	$ -
O&M Manual Approved	1	$ 8,008.00	4%	$ 8,008.00	0%	$ -	0%	$ -	0%	$ -
Training/ Professional Recording Per Section	1	$ 8,008.00	4%	$ 8,008.00	0%	$ -	0%	$ -	0%	$ -
DIVISION 16 ELECTRICAL: PER SPECIFICATION SECTION										
Need to list & distribute correctly										
Basin 1	1	$ 1,800.00	LS	$ 1,800.00	0%	$ -	0%	$ -	0%	$ -
Basin 1- SubContractors	1	$ 29,700.00	LS	$ 29,700.00	0%	$ -	0%	$ -	0%	$ -
Drop Inlet	1	$ 3,150.00	LS	$ 3,150.00	0%	$ -	0%	$ -	0%	$ -
Drop Inlet- SubContractors	1	$ 32,265.00	LS	$ 32,265.00	0%	$ -	0%	$ -	0%	$ -
Basin 4	1	$ 8,325.00	LS	$ 8,325.00	0%	$ -	0%	$ -	0%	$ -
Basin 4- SubContractors	1	$ 70,875.00	LS	$ 70,875.00	0%	$ -	0%	$ -	0%	$ -
DIVISION 17 ELECTRICAL: PER SPECIFICATION SECTION- Not Shown										
Total Original Contract:				**$ 1,367,287**		**$ -**		**$ -**		**$ -**

INLAND EMPIRE UTILITIES AGENCY
CONSTRUCTION PROGRESS PAY ESTIMATE

PARTIAL PAYMENT SUMMARY INCLUDING CURRENT PAYMENT:

	This Period			Total to Date		
	From:			From:		
	To:			To:		
Amount Earned Original Work		$ -	Amount Earned Original Wk		$ -	
Adjustments			Adjustments			
Amount Earned Change Orders	$ -		Amount Earned C/O	$ -		
Liquidated Damages	$ -		Liquidated Damages	$ -		
Other			Other			
Total Adjustments		$ -	Total Adjustments		$ -	
Revised Contract Payment		$ -	Revised Contract		$ -	
			Prior Payments		$ -	
Retention		$ -	Retention	10%	$ -	
		$ -	Stop Notices			
Amount Due		**$ -**	**Amount Due**		**$ -**	

TOTAL PAYMENT SUMMARY:

	Total Contract	
Total Original Contract		$ 1,367,286.79
Contract Adjustments		
Change Orders	$ -	
Liquidated Damages	$ -	
Stop Notices	$ -	
Total Adjustments		$ -
Total Adjusted Contract		$ 1,367,286.79
Total Payments to Date		$ -
Retention (10%)		$ -
Retention Reduction- Approval- DATE		$ -
Retention Reduction- Approval- DATE		$ -
Stop Notices		$ -
Balance of Contract		**$ 1,367,286.79**

Budget Management:

Budget Distribution- This Contract			Budget CNSW Per WBS	AMT Expended per WBS
WBS No.	Amount Due	Retention		
	$ -	$ -	$ -	$ -
	$ -	$ -	$ -	$ -
	$ -	$ -	$ -	$ -

Budget Distribution-Other/ By WBS Element			Budget CNSW Per WBS	AMT Expended per WBS
WBS No.	Amount Due	Retention		
	$ -	$ -	$ -	$ -
EN00000	$ -	$ -	$ -	$ -
EN00000	$ -	$ -	$ -	$ -
	$	-	$ -	$ -
TOTAL	$ -		$ -	$ -
	Amount Due	**$ -**		

CONTRACT TIME SUMMARY:

Contract Start Date	June 21, 2012	
Contract Duration	365	Days
Days Expired	0	Days
Days Remaining	365	Days
Contract Completion Date	June 21, 2013	
Authorized Time Extension	0	
Revised Completion Date	June 21, 2013	
Revised Contract Duration	365	
Contract Over Run	0	
Liquidated Damages $ Per Day	$4,000.00	
Status of Project		

PROJECT COMPLETION SUMMARY:

0%	% Work Complete
0%	% Time Expired
0%	% Contract Amount Expended

-

PROJECT ON SCHEDULE

APPROVALS:

Contractor:_____

Date:_____

Project Coordinator:_____

Date:_____

Project Manager:_____

Date:_____

Manager of CM:_____

Date:_____

Executive Manager:_____

Date:_____

General Manager:_____

Date:_____

* Fifteen percent of the total cost of each item is allotted to the cost of Shop Drawing preparation, Operation and Maintenance Manuals, Testing and Training. This amount will be released upon approval, by the ENGINEER; three percent is apportioned to Testing and four percent each to the

Inland Empire Utilities Agency
A MUNICIPAL WATER DISTRICT

Engineering Design Guidelines

Section 9- Spare Parts Strategy

Section 9- Spare Parts Strategy

Inland Empire Utilities Agency
A MUNICIPAL WATER DISTRICT

9.1 Spare Parts Strategy

9.1 Spare Parts Strategy

LAST UPDATED			May 1, 2024
Item	**Parameter**	**Criteria**	**Notes**
0	Scope	This document applies to developing a Spare Parts strategy for the Project	
1	Workshop	Hold Spare Parts Workshop to establish the facility expected life, criticality, reliability, and redundancy requirements including: - Critical assets and online factors - Point of failure analyses - Routine and preventative maintenance requirements - Manufacturers' lists of recommended critical Spare Parts correlated with equipment online factors, shelf life (if any), typical order lead time, and current prices - Define Preliminary Stocking Triggers - Establish Preliminary Min/Max number of spares	Workshop shall be held when asset/equipment selection has be completed Point of failure analysis is similar as Failure Mode Effect Analysis (FEMA)
2	Cost of Spare Parts	Identify and include the Cost of Spare Parts in the Business Case Evaluations for critical and significant equipment (e.g., membrane equipment)	
3	Specification Sections	Develop specification sections consistent with the Spare Parts Strategy to be included in the bid documents	
4	Equipment Bills of Materials (EBOM) development	Develop Equipment Hierarchy for the Project consistent with IEUA Asset Management and SAP CMMS requirements	
		Determine the equipment that is maintained by OEM's outside of IEUA's responsibility, obsolescence, etc.	
		Determine the number of unique Spare Parts required in relation to equipment criticality	
		Perform Preliminary Criticality Analysis	HSE impact & the extended lead time to procure parts means that losses almost always far exceed the holding cost of the spares

LAST UPDATED			May 1, 2024
Item	**Parameter**	**Criteria**	**Notes**
			Yes Agency shall define and adopt Criticality Analysis Criterion
		Identity Key Maintainable Units	Spare parts that need maintenance (or repairable spares)
		Prepare Preliminary EBOM for Assets	
		Perform Site Review to close gaps at equipment level (e.g., serial no's missing info) to align existing and new facilities, if needed	
		Improve / Expand EBOM - Site review - Link to current spares catalogues	
		Review and Update - Finalize EBOM - Prepare Final Asset Data in ready format for upload to SAP	
5	Onsite Spares	Quantify Downtime Losses (as per Criticality Analysis)	
		Determine the average lead time for procurement per SAP. For individual Spares Analysis, actual procurement lead time shall be considered.	Average lead time will be developed for all spares and captured in the item master record in SAP purchasing/Inventory Waiting for any part that causes downtime is generally unacceptable
		The maximum acceptable time to obtain Spare Parts and/or refurbish a Redundant Unit or Interchangeable Unit is XX days.	Will depend on criticality and all other KPIs of the asset is being supported
6	Storing Spare Parts On-Site	Classify Spares as Strategic or Routine	Strategic Spare are spares that are unlikely to be required within a three (3) year time frame and are held for "insurance"
		Number of Spare Parts stored on site shall be the minimum number required to address one failure incident	Does it cause a breakdown or HSE problem? If NO, do

LAST UPDATED			May 1, 2024
Item	**Parameter**	**Criteria**	**Notes**
			not stock, unless a Consumable e.g. filters Re-ordering Spare Parts should be subject to review at the time of failure

Inland Empire Utilities Agency
A MUNICIPAL WATER DISTRICT

Engineering Design Guidelines

General Attachments

General Attachments

Inland Empire Utilities Agency
A MUNICIPAL WATER DISTRICT

GA.1. Survey Requirements

GA.1. Survey Requirements

A. Research city and county records for existing mapping and evidence of recorded monuments. All existing survey monumentation within the project area shall be shown and referenced on any necessary Record of Survey or Corner Record Survey (if applicable) and the topographic strip maps.

B. The District's standards for horizontal and vertical control are the California State Plane Coordinate System (NAD83), 2007 Epoch and NGVD88 vertical datum unless specifically instructed otherwise.

C. Consultant shall establish and set property monuments necessary to establish the property lines of the project site and the limits of any access easement as indicated on the recorded documents. Horizontal Control shall meet or exceed Two Centimeter (0.07') accuracy

D. Conduct field survey work to establish ground control based on found record monuments, city or county benchmarks and established through CORS or CGPS control. For street centrelines or boundary corners where monuments cannot be located, provide appropriate annotations.

E. Perform necessary aerial mapping of the project site, plus 100 feet outside of the project area, as indicated on the enclosed Exhibit Map. All aerial topographic mapping shall be consistent with the National Map Standards. Any Consultant which intends to utilize Unmanned Aerial Systems (UAS or "drone") for any portion of work shall strictly adhere to the rules per the Federal Aviation Administration (FAA) Small UAS Rule (14 CFR part 107) and shall also be in conformance with the minimum standards as outlined in the aforementioned National Map Standards.

F. Conduct conventional field surveying and related work to supplement aerial mapping indicated above in paragraph 1.1e) as follows:

   1. Paint around all existing manholes and valve cans in the street so they are visible in the aerial mapping.
   2. Provide a list of control points indicating point designations, descriptions, coordinates, and elevations to be shown on the drawings.
   3. Measure and provide the rim and invert elevations of sewer and storm drain manholes, and storm drain inlets within the project area.
   4. Perform a topographic survey of all existing features within the limits of the project area obscured from the aerial mapping by existing trees, heavy ground foliage, or man-made canopies.
   5. For pipeline projects, provide street cross sections (from street right-of way to right-of-way) at twenty five feet (25') intervals to facilitate in the design of any gravity flow utilities.

G. Field survey work shall provide the following minimum accuracy:

   1. Horizontal and vertical control will conform to Two Centimeter Network Accuracy (0.07 foot) as defined in the Caltrans Survey Manual publication "Classification of Accuracy Standards (April 2015)".

2. Targets for ground control of aerial mapping shall be spaced so that each base sheet has at least one target on it.

H. The Consultant shall provide 3 sets of stamped and wet signed topographic maps, on mylars, that shall include:

1. Contour at one (1) foot intervals with every fifth contour labeled.
2. All existing visible surface features and facilities.
3. Show and call out record data for property lines and right-of-way.
4. Indicate city/county bench marks and basis of bearings within the project area.
5. A digital format on compact disc compatible to Civil 3D 2016 (or newer).

Inland Empire Utilities Agency
A MUNICIPAL WATER DISTRICT

GA.2. Landscape Guidelines

GA.2. Landscape Guidelines

			LAST UPDATED Sep 1, 2025
Clause	**Parameter**	**Criteria**	**Notes**
0	Scope	This document applies to the landscape design at Agency facilities.	
1	Intent	Landscapes shall be water-saving, runoff-reducing, attractive, safe, and maintenance-efficient.	
2	Means to Achieve Landscape Objectives	a. Use of low-water-use plant materials adapted to the conditions of the Inland Empire and other Mediterranean-type climate zones; these plants—after establishment—can generally survive on normal rainfall, with supplemental dry season soakings of once or twice a month; this includes an emphasis on use of native plants as available from local growers. b. Use of plant material which is easy-care and size-appropriate for the available space—not requiring frequent pruning—and non-invasive (root systems and/or reseeding); root barriers shall be required at tree locations within close proximity (5'+-) to paved areas. c. Use of plant material placed so as not to block views at vehicular intersections or locations of vehicular and pedestrian interface, nor block signage or site lighting. d. Use of appropriate water-conserving irrigation techniques which employ drip and other micro irrigation design using Agency-supplied recycled water, with no runoff onto adjacent paved surfaces. e. Use of weather-based 'smart controllers' whose design automatically adjusts water use according to real-time weather conditions. f. Use of aesthetically-pleasing shredded wood mulch, ¾" crushed aggregate, and/or stabilized decomposed granite over ground surfaces—whether planted or not—to reduce/eliminate erosion, runoff, weeds, and dust, and which allow for rainfall infiltration. b. g. Use of water-dependent turf grasses shall not be permitted on Agency landscapes.	
3	Plant Pallete	Generally consists of native and Mediterranean climate-adaptive plant materials; may include many of those found on the 'Inland Empire Garden Friendly' plant list (http://www.watersavinggardenfriendly.com), with an emphasis on those trees and shrubs which are native to	

		LAST UPDATED Sep 1, 2025	
Clause	**Parameter**	**Criteria**	**Notes**
		California and Southwest states (indicated by 'N' symbol found in column to the left on the lists).	
4	Trees Affected by Polyphagous Shot	Agency is refraining from using trees most susceptible to the PSHB due to the recent spread of this insect to this Hole Borer (PSHB) area and the destructive nature of these invasive non-native borers. These trees include: • Western Sycamore (Platanus racemosa) • London Plane (Platanus x acerifolia) • Western Cottonwood (Populus fremontii) • White Alder (Alnus rhombifolia) .	
5	Irrigation Components	a. Drip irrigation shall be generally used for new plant material—with bubblers, micro-sprays, and other non-conventional sprayhead devices permissible where appropriate. b. Drip tubing with in-line emitters at 12" spacing (Rain Bird XFSP-06012-500 Subsurface Dripline or equal) in ring layout around root balls is generally recommended, with runs of blank tubing or purple piping (buried) used for approaches and areas containing no plants; tubing shall be buried under soil surface or covered by mulch or gravel; tubing shall be purple or purple-striped indicating recycled water use. c. Dripline lateral installations shall adhere to industry standard design practice including each having a pop-up operation indicator, an air relief valve at high point in 6" round valve box (purple), and an end-of-line flush valve in 6" round valve box (purple). d. Irrigation control valves shall be low-flow type suitable for drip zone use (Rain Bird XCZ-100-PRBR or equal) with built-in pressure-regulating filtration capability and preceded by a line-size ball valve for easy shut off--each installed in a rectangular jumbo valve box (purple). e. Irrigation controllers shall be 'smart controllers' with capability for weather-based modification of the watering program (Hunter 'I-CORE' Series with 'Solar Sync' module with ET sensing for automatic daily adjustment based on local weather conditions or equal).	

LAST UPDATED Sep 1, 2025			
Clause	**Parameter**	**Criteria**	**Notes**
6	Shredded Wood Mulch	a. Typically minimum 3” thickness over finished surface containing 2” to 5” length pieces to prevent wind transport of material; no material derived from palm trees shall be included. b. b. Refrain from placing mulch against stems or trunks to allow sunlight and air to reach the plant.	
7	¾” Crushed Aggregate	Typically minimum 3” thickness over finished grade, with material having angular faces which interlock with compaction. Match color/type of material already existing in vicinity of site if applicable.	
8	Decomposed Granite(DG)	DG material shall typically be ‘Pyrite Gold’ or similar with stabilizer added to yield a hard durable surface when properly applied with moisture and rolling. Apply over graded compacted Class II base with minimum 2” thickness. Slope to drain, do not allow concentrated water or drainage flows over DG surface.	
9			
10			

Inland Empire Utilities Agency
A MUNICIPAL WATER DISTRICT

GA.3. Commissioning Plan Roles and Responsibilities

GA.3. Commissioning Plan Roles and Responsibilities

COMMISSIONING ROLES AND RESPONSIBILITIES MATRIX

NO.	TASK	OWNER	CONTRACTOR	ENGINEER
	Testing and Training Phase			
Source Testing				
1	Source Testing	Witness	Lead	Witness, Review
Installation Testing				
2	Electrical Conductor Testing	No Action	Lead	Witness
3	Electrical Field Acceptance Tests	No Action	Lead	Witness
4	Instrument Field Calibration	No Action	Lead	Witness
5	Network Installation Testing	Witness	Lead	Witness
6	Loop Testing	Witness	Lead	Witness
7	Pressure Testing	No Action	Lead	Witness
8	Leak Testing	No Action	Lead	Witness
9	Holiday Testing	No Action	Lead	Witness
10	HVAC Testing	No Action	Lead	Witness
11	Motor Electrical Testing	No Action	Lead	Witness
Functional Testing				
12	Network Operational Testing	Witness	Lead	Review
13	Preliminary Run Testing Local/Manual Control	Witness	Lead	Review
14	PCIS Functional Demonstration Testing - Local/Auto Control Testing - Remote/Manual Contact Testing - Alarm Testing - Control Loop Testing	No Action	Lead	Review
15	Subsystem Start-Up and Testing	Witness	Lead	Review
16	Equipment/System Start-Up and Testing	Witness	Lead	Review
17	HVAC Start-Up and Testing	Witness	Lead	Review
18	Corrosion Control Start-Up and Testing	Witness	Lead	Review
19	Wide Area Network Communications Testing	Support	Lead	Witness
20	Manufacturer's Certificate of Installation and Functionality Compliance	No Action	Lead	Witness, Review
Clean Water Facility Testing				
21	Test Water Management Plan Finalization	Support	Lead	Review
22	Clean Water Facility Testing	Witness	Lead	Witness, Review

NO.	TASK	OWNER	CONTRACTOR	ENGINEER
Process Start-Up Phase				
Process Start-Up				
23	Commissioning Documentation and Data Review	Review	Support	Lead
24	Start-Up Go/No-Go Decision Criteria	Lead	Support	Review
25	Building and Fire Inspection Compliance Check	No Action	Lead	Witness
26	HVAC Functionality Check	No Action	Lead	Witness
27	Start-Up Sequence Review	Support	Lead	Review
28	Temporary Testing Arrangement Finalization	Support	Lead	Support
29	Start-Up Forms Finalization	Support	Lead	Support
30	Operation Testing Plan Finalization	Review	Support	Lead
31	Test Water Management Plan Finalization	Support	Lead	Review
32	System Testing	Support	Lead	Witness
33	Control Loop Tuning	Support	Lead	Witness
34	Process Area Start-Ups	Support	Lead	Witness
35	Facility-Wide Start-Up	Support	Lead	Witness
36	Process Control Systems Testing	Support	Lead	Witness
38	HVAC Final Testing, Adjust, and Balancing	Witness	Lead	Witness, Review
Process Operational Period				
39	Operational Testing	Support	Lead	Witness, Review
40	Final Testing Reports	Support	Lead	Review
41	Water Quality Testing and Documentation	Support	Lead	Review

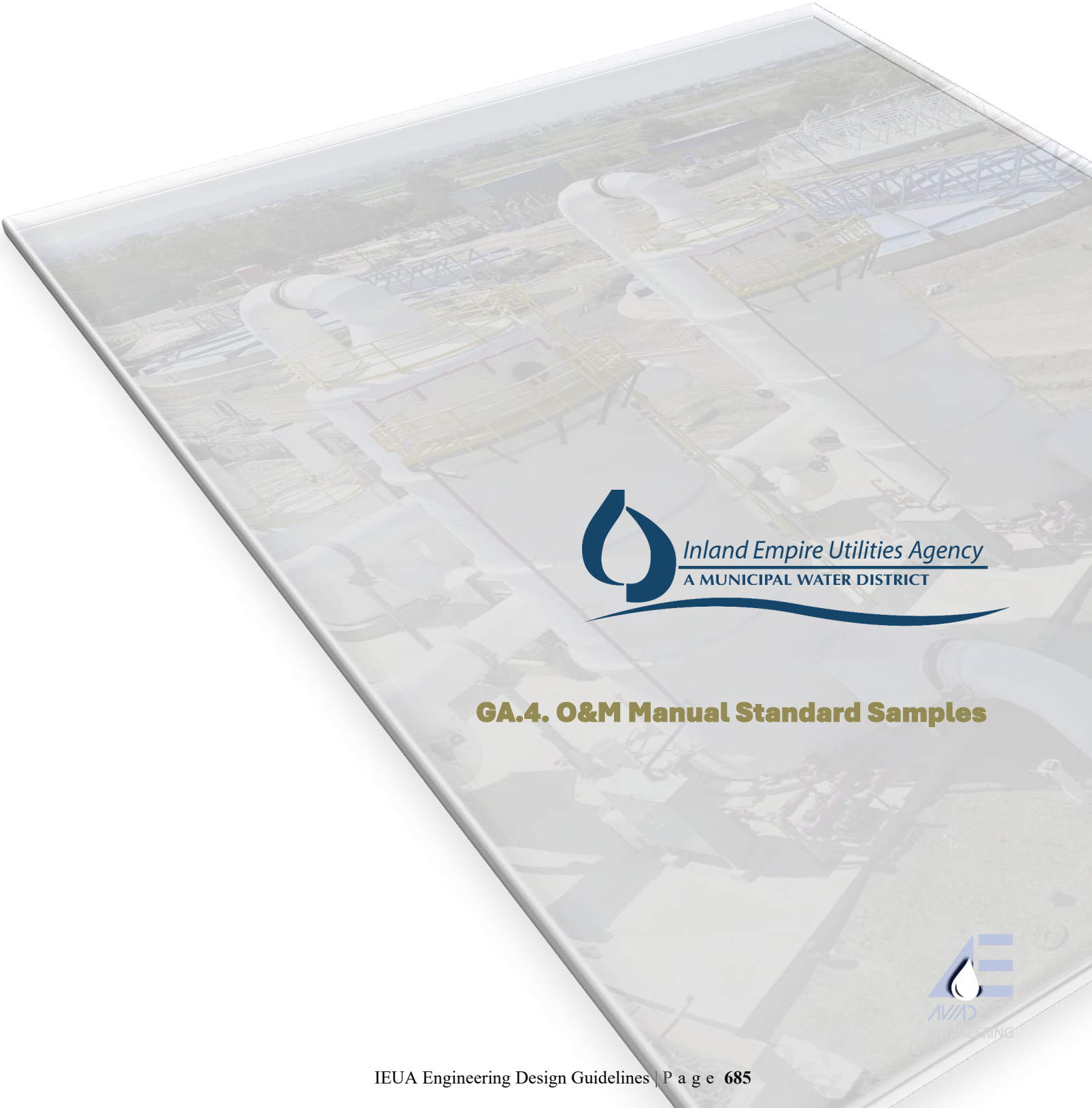

Inland Empire Utilities Agency
A MUNICIPAL WATER DISTRICT

GA.4. O&M Manual Standard Samples

GA.4. O&M Manual Standard Samples

INLAND EMPIRE UTILITIES AGENCY	RP-4 WWTP Operations and Maintenance Manual
Title: PRIMARY TREATMENT	Rev. 1
	Revision Date: July 20, 2018
	Review by B&V (initial): KA
	Review by Project Manager: BH
	Review by IEUA:
	Final Submitted to Client (Yes/No):

TABLE OF CONTENTS

3 PRIMARY TREATMENT 3-1
3.1 OVERVIEW 3-1
3.2 COMPONENTS 3-2
3.2.1 Primary Influent Flow Splitter 3-2
3.2.1.1 Description 3-2
3.2.1.2 Upstream and Downstream Unit Processes 3-4
3.2.1.3 Design Criteria 3-4
3.2.1.4 Process Control and Automation 3-5
3.2.2 Primary Clarifier 3-5
3.2.2.1 Description 3-5
3.2.2.2 Upstream and Downstream Unit Processes 3-9
3.2.2.3 Design Criteria 3-10
3.2.2.4 Process Control and Automation 3-11
3.2.3 Chemical Feed System 3-13
3.2.3.1 Description 3-13
3.2.3.2 Upstream and Downstream Unit Processes 3-18
3.2.3.3 Process Design Criteria 3-19
3.2.3.4 Process Control and Automation 3-20
3.3 OPERATION 3-24
3.3.1 Unit Process Control Procedures 3-24
3.3.2 Standard Operating Procedures 3-24
3.3.3 Abnormal Operating Procedures 3-25
3.4 MAINTENANCE 3-26
3.4.1 Primary Influent Flow Splitter 3-26
3.4.1.1 Flygt Submersible Primary Influent Mixer 3-26
3.4.2 Primary Clarifier System 3-26
3.4.2.1 WesTech Primary Clarifier Drive Assembly 3-26
3.4.2.2 Primary Sludge and Scum Waste Actuated Valves 3-29
3.4.2.3 Primary Scum Level Sensor 3-30
3.4.2.4 Primary Sludge Flow Meters 3-31
3.4.3 Chemical Feed System 3-31
3.4.3.1 Ferric Chloride Dosing Pumps 3-31
3.4.3.2 Polymer Dosing System 3-32
3.5 DESIGN CRITERIA 3-33
3.5.1 Flygt Primary Influent Flow Splitter Box 3-33
3.5.2 Flygt Primary Influent Flow Splitter Submersible Mixer 3-33
3.5.3 Westech Primary Clarifiers 3-34
3.5.4 Primary Sludge Actuated Valves 3-36

3.5.5 Primary Sludge Flow Meters 3-36
3.5.6 Primary Scum Wetwell and Actuated Valve 3-37
3.5.7 Ferric Chloride Chemical Feed System 3-38
3.5.8 Coagulant Aid Polymer Chemical Feed System 3-39
3.6 WATER QUALITY.....3-40
3.7 MECHANICAL TROUBLESHOOTING 3-41
3.7.1 Primary Influent Splitter Troubleshooting 3-41
3.7.1.1 Flygt Submersible Primary Influent Splitter Mixer 3-41
3.7.2 Primary Clarifier System Troubleshooting 3-43
3.7.2.1 WesTech Primary Clarifier Drive Unit 3-43
3.7.2.2 Primary Sludge and Primary Scum: Dezurik Plug Valves.....3-47
3.7.2.3 Primary Sludge Flow Meter 3-48
3.7.2.4 Primary Scum Level Sensor 3-49
3.7.3 Chemical Feed System Troubleshooting 3-51
3.7.3.1 Ferric Chloride Chemical Feed Pump 3-51
3.7.3.2 Polymer Chemical Feed System.....3-52
3.8 SAFETY 3-53
3.8.1 Safety Manual 3-53
3.8.2 Confined Space 3-53
3.8.3 Specific Hazards – Primary Treatment Hazardous Headspace 3-55
3.8.4 Specific Hazards – Primary Treatment Mechanical Equipment 3-57
3.8.5 Specific Hazards – Primary Treatment Chemicals 3-57
3.8.5.1 Safety Showers near Primary Treatment Chemicals 3-58

TABLES

Table 3-1: Primary Influent Splitter Box Design Criteria 3-4
Table 3-2: Primary Clarifier Splitter Box Mixer Control 3-5
Table 3-3: Primary Clarifier Design Criteria 3-10
Table 3-4: Primary Clarifier Drive Control 3-11
Table 3-5: Primary Sludge Valve Control 3-12
Table 3-6: Primary Scum Valve Control 3-13
Table 3-7: Primary Clarifier Efficiencies – Conventional versus CEPT 3-14
Table 3-8: Ferric Chloride Dosing System Design Criteria 3-19
Table 3-9: Polymer Pumps Design Criteria 3-20
Table 3-10: Primary Clarifier Ferric Chloride Dosing Pump Control 3-20
Table 3-11: Coagulant Polymer Activation and Dosing Pump Control 3-22
Table 3-12: Preliminary Treatment Unit Process Control Procedures 3-24
Table 3-13: Primary Treatment Standard Operating Procedures 3-24
Table 3-14: Primary Treatment Abnormal Operating Procedures 3-25
Table 3-15: Flygt Primary Influent Mixer Recommended Maintenance 3-26
Table 3-16: WesTech Primary Clarifier Recommended Maintenance 3-27
Table 3-17: Dezurik Valves Recommended Maintenance 3-29
Table 3-18: Scum Wetwell and Level Sensor Recommended Maintenance 3-30
Table 3-19: Endress and Hauser Flow Meter Recommended Maintenance 3-31
Table 3-20: Primary Influent Splitter Box Design Criteria 3-33
Table 3-21: Primary Influent Splitter Box Mixer Design Criteria 3-33
Table 3-22: Primary Clarifier Design Criteria 3-34
Table 3-23: Primary Sludge Actuated Valve Design Criteria 3-36
Table 3-24: Primary Sludge Flow Meter Design Criteria 3-36
Table 3-25: Primary Scum Actuated Valve & Level Sensor 3-37
Table 3-26: Ferric Chloride Dosing System Design Criteria 3-38
Table 3-27: Polymer Pumps Design Criteria 3-39
Table 3-28: Primary Treatment Water Quality Sampling : Process 3-40
Table 3-29: AUMA Actuator Troubleshooting 3-47
Table 3-30: Confined Space Evaluations in Primary Treatment Area 3-53
Table 3-31: LEL Gas Detector Design Criteria 3-56
Table 3-32: LEL Receiver and Controller Design Criteria 3-56

FIGURES

Figure 3-1: Primary Influent Flow Splitter Structure 3-2
Figure 3-2: Primary Influent Flow Splitter 3-3
Figure 3-3: Primary Influent Isolation Gates 3-3
Figure 3-4: Primary Clarifier Cut-Away 3-7
Figure 3-5: Primary Clarifier Internal Components 3-7
Figure 3-6: Primary Clarifier Stilling Well and Sludge Hopper 3-8
Figure 3-7: Primary Sludge Wasting System 3-8
Figure 3-8: Ferric Chloride Tank and Metering Pumps 3-15
Figure 3-9: Ferric Chloride Dose Location 3-15
Figure 3-10: Polymer Tote Storage and Dosing Systems 3-16
Figure 3-11: Dynablend Polymer Activation Unit 3-17
Figure 3-12: Primary Influent Flow Splitter 3-18
Figure 3-13: Westech Primary Clarifier Maintenance Schedule 3-28
Figure 3-14: WesTech Primary Clarifier Lubrication Schedule 3-29
Figure 3-15: AUMA Actuator Maintenance 3-30
Figure 3-16: Pulsafeeder Ferric Chloride Pumps Maintenance 3-31
Figure 3-17: Polymer System Maintenance 3-32
Figure 3-18: Flygt Mixer Troubleshooting Guide – Mixer Fails to Start 3-41
Figure 3-19: Flygt Mixer Troubleshooting Guide – Mixer Starts but Trips 3-42
Figure 3-20: Flygt Mixer Troubleshooting Guide – Mixer Stops and Starts 3-42
Figure 3-21: Westech Primary Clarifier Drive Troubleshooting Guide 3-45
Figure 3-22: Westech Primary Clarifier Speed Reducer Troubleshooting Guide 3-46
Figure 3-23: Dezurik Plug Valve Troubleshooting Guide 3-47
Figure 3-24: Endress and Hauser Flow Meter Troubleshooting Chart 3-48
Figure 3-25: Foxcom IDP-10D Troubleshooting Charts 3-50
Figure 3-26: Ferric Chloride Pumps Troubleshooting Guide – Page 94 3-51
Figure 3-27: Polymer System Troubleshooting Guide – Page 43 3-52
Figure 3-28: Primary Influent Splitter Box Hatch 3-54
Figure 3-29: Primary Scum Wet-Well 3-54
Figure 3-30: Primary Scum Valve Vault 3-55
Figure 3-31: Primary Scum Hatch 3-55
Figure 3-32: Local Display and Reset for H_2S Monitor in Primary Clarifier Area 3-56
Figure 3-33: Ferric Chloride Dosing Safety Shower 3-59
Figure 3-34: Ferric Chloride Tank Fill Safety Shower 3-59
Figure 3-35: Ferric Chloride Tank Safety Shower 3-60
Figure 3-36: Polymer Dosing Safety Shower 3-60

3 PRIMARY TREATMENT

3.1 OVERVIEW

Primary treatment consists of simply holding the preliminary treated sewage in a quiescent clarifier tank or basin for sufficient time enabling the heavier settleable solids to settle to the bottom while oil, grease and lighter solids float to the surface of the tank. The main purpose of the primary treatment stage is to produce both a homogeneous liquid reduced in suspended solids and BOD_5 that is amenable to being treated biologically, and a sludge that can be separately treated or processed. Primary clarification process also removes soluble phosphorus by precipitation with ferric chloride.

The RP-4 primary clarifier tanks are equipped with mechanically driven scrapers that continually move the collected sludge towards a hopper in the base of the tank from where it is drained by gravity to RP-1 for further treatment and stabilization. Grease and oil from the floating material is also drained by gravity to RP-1 for further treatment.

3.2 COMPONENTS

3.2.1 Primary Influent Flow Splitter

3.2.1.1 Description

The primary influent flow splitter performs two functions:

- Split de-gritted flow equally to the two current primary clarifiers, and potentially a third future primary clarifier.
- Provide a rapid mix of polymer to enhance settling (if required).
- Further mixes ferric chloride that is added prior to the influent pump stations.

The de-gritted influent enters the splitter box at the bottom of the structure through a 54 inch pipeline. A chemical diffuser pipe for polymer injection is installed at midpoint of the pipe as it enters the splitter box. Polymer addition is typically not required but is available for optimizing primary clarifier performance. Polymer dose is expected to be between 0.25 and 0.50 mg/L. A submersible mixer rapidly mixes any polymer added and also maintains solids in suspension. The mixed influent then normally splits by entering two launders that equally split flow to the two primary clarifiers. The equally split flow is then conveyed to each primary clarifier through 36 inch pipelines. One clarifier can be removed from service if necessary at this splitter structure by closing the effluent gate on the specific clarifier feed launder.

Figure 3-1: Primary Influent Flow Splitter Structure

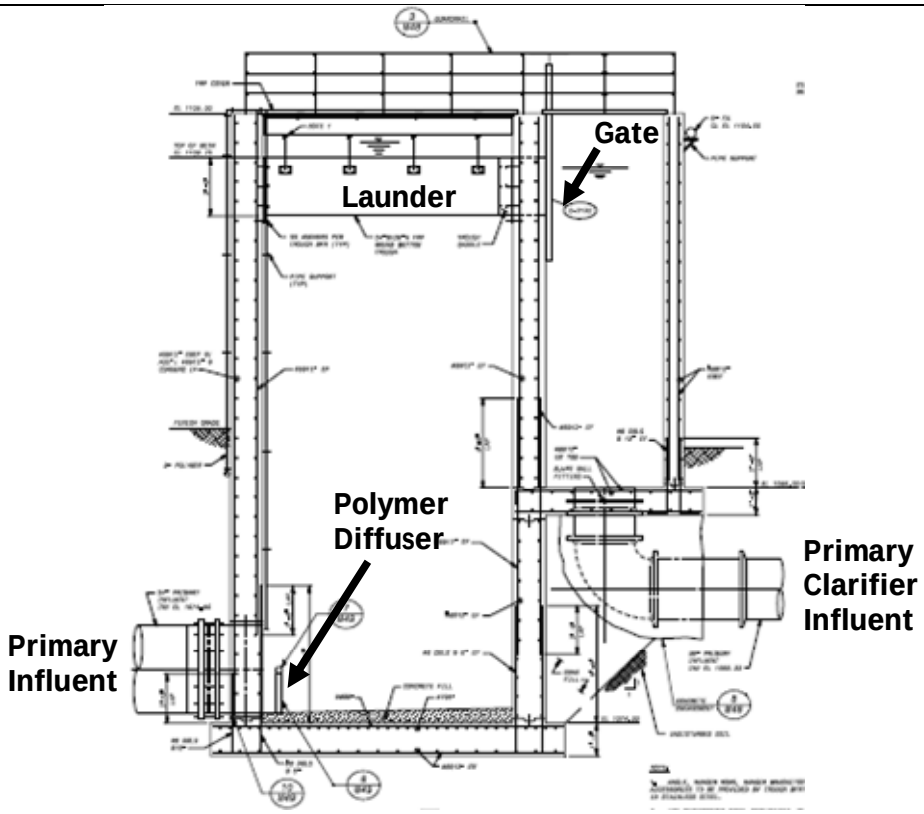

Figure 3-2: Primary Influent Flow Splitter

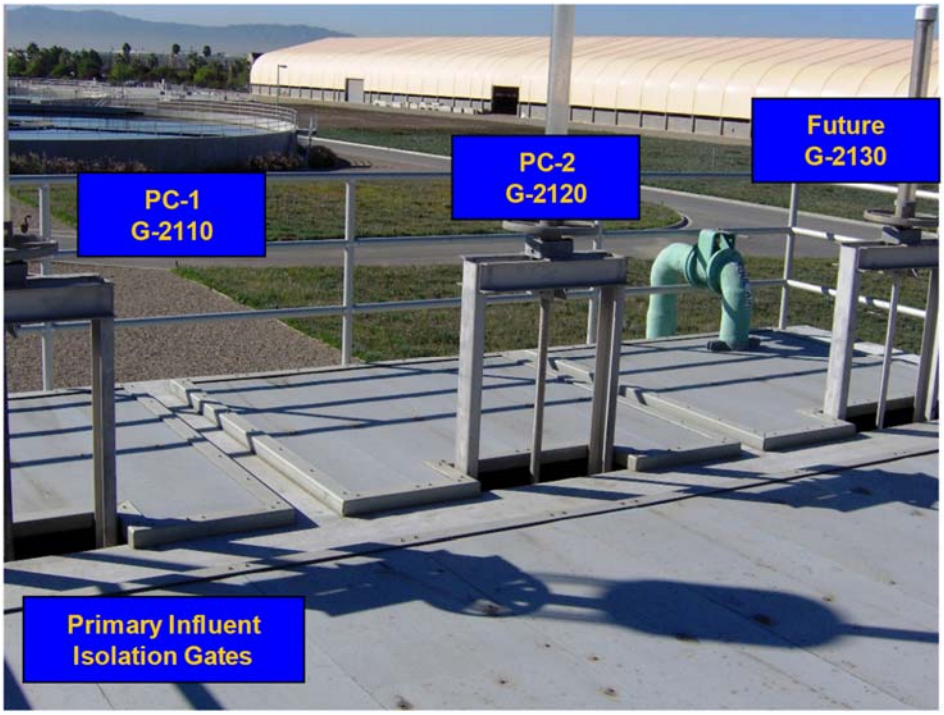

Figure 3-3: Primary Influent Isolation Gates

3.2.1.2 Upstream and Downstream Unit Processes

How the upstream unit affects this process: The primary influent comes from the two vortex grit removal systems. If the grit removal systems are bypassed or fail to remove grit, grit could collect in the rapid mix section of the primary influent splitter. This grit will abrade the submersible mixer impeller and could eventually reduce hydraulic capacity (and therefore retention time) required to ensure good mixing of the polymer with the influent wastewater.

How this unit affects the downstream process: The two primary clarifiers downstream were designed to receive equal flow from the primary influent flow splitter. If flow is unequal, then the loading to an individual clarifier will be greater than normal operating conditions. Unequal flow split will tend to overload one primary clarifier more than the other unit. Unequal flow split could occur if launder weirs at the primary influent splitter are blocked with debris or if the weirs are no longer level.

3.2.1.3 Design Criteria

Table 3-1: Primary Influent Splitter Box Design Criteria

Parameter	Units	Value	Reference
Mixer:			
Number	units	1	Flygt Submersible Mixer.pdf Page 12
Type		Submersible	
Model		Flygt 4640 SF	
Motor horsepower	hp	4	
Impeller Code	#	083709SF	
Impeller Speed	rpm	855	
Pumping Flow	gpm	4,840	
Rapid Mix Tank			
Tank Dimensions (L x W x SWD)	ft	20’ x 12’6” x 28.75’	D-6579-24
Tank Volume	gallons	53,762	D-6579-24
Launder Dimensions (L x W x D)	ft	12’6x2’x3’	D-6579-24
# of Tank Volume Turnovers by mixing	#/hr	5.4	
Tank retention time at AAD	minutes	5.5	
Tank Retention time at PF	minutes	2.4	
Flow Split Section			
Influent Split Dimensions (L x W x SWD)	ft	6’ x 6’ x 15.8’	D-6579-24
Influent Split	#	3	D-6579-24
Isolation Gates	#	3	D-6579-24

Table 3-1: Primary Influent Splitter Box Design Criteria			
Parameter	**Units**	**Value**	**Reference**
Gate Type and Model		Weir, Whipps, 923	Whipps Dwg. BC-923-215
Gate Dimensions (L x W)	ft	3'x2'	BC-923-215

3.2.1.4 Process Control and Automation

Table 3-2: Primary Clarifier Splitter Box Mixer Control			
Equipment Tag#	RTU	Alarms	Reference
MX-2010	6	Failure	P06
Interlocks	None		
Local Manual	Local manual control of the primary clarifier splitter box mixer is provided through the ON-OFF-REMOTE (O-O-R) selector switch for the mixer mounted on the local control station near the mixer. When ON is selected, the Mixer runs continuously. The STOP-LOCKOUT (SLO) pushbutton mounted on a local control station near the mixer disables the mixer when in the stop-lockout position.		
Remote Manual	Remote manual control is provided through the RTU. When the O-O-R selector switch at the Mixer is in the REMOTE position, the Mixer is controlled from the HMI using operator manual commands.		

The mixer runs continuously and all other control is passive, through hydraulic flow splits or manual operation through closing or adjusting isolation gates.

3.2.2 Primary Clarifier

3.2.2.1 Description

The primary clarifiers were installed for the purpose of continuously removing substantially all settleable solids from the sewage. Primary clarification is a cost effective removal method for solids in raw wastewater held in suspension by flow velocity. Particles in raw wastewater will agglomerate and form heavier particles that will settle by gravity under quiescent conditions. In addition, any grease and scum will float to the surface of the clarifier.

The settling process is dependent on a number of factors including liquid viscosity, density, particle size, the solids concentration of the wastewater and the time allowed for settling to occur (Temperature also has an indirect effect on settling by modifying viscosity and density of the wastewater). In primary tanks, feed solids concentration is typically low, less than 400 mg/L, compared with the secondary clarifiers, where the feed solids concentration will

exceed 3,000 mg/L. However, primary solids do interact and agglomerate so this type of settling is described as both:

- Type 1 - discrete settling.

- Type 2 - flocculent settling. Particles collide, agglomerate and settle faster.

In primary clarifiers all of the settling is essentially discrete. Addition of polymer may enhance flocculent settling but most of the solids removal is through discrete settling as the primary solids are heavy and not flocculating.

Conventional primary clarifiers remove on average 50 to 65% of TSS and 25 to 35% of COD or BOD demand in the incoming wastewater (Metcalf and Eddy, 2003) without chemical addition. The clarified primary treated wastewater is removed at the tank periphery by overflowing a weir. The clarified primary sludge is collected by a rake arm, distributing the sludge evenly to a hopper at the bottom of the tank, where sludge can then be removed by gravity through the primary sludge waste system.

The clarifiers are covered for odor control. The effluent weirs are v-notched. The sludge is center fed. The rake arms are supported and driven by a center drive unit by way of a cage that connects to the drive main gear. Scum is skimmed off the surface by mechanical skimmers, and directed to scum sumps. The scum sumps are hydraulically connected. Scum is drawn off intermittently by opening the actuated scum waste control valve on Primary Clarifier No.2. The scum in both sumps then drains by gravity to the common buried 8-inch sludge/scum pipeline that discharges into a sewer for treatment at RP-1. The actuated waste scum valve is used to maintain an operator maximum set point and minimum set point level in the scum sumps. The scum sumps are connected therefore the levels are expected to be the same unless a blockage occurs in the pipeline.

The particles which settle and thicken into sludge are gently mixed by the rotating rake arms in the sludge thickening well; this releases gas bubbles as the sludge compacts. The movement keeps the sludge moving towards the center of the tank, from where it is wasted, and at the same time keeps the sludge from collecting into solid masses. The primary sludge that settles to the bottom of the clarifiers is piped to the primary sludge waste control valves. Sludge is drawn off intermittently by opening the actuated primary sludge waste control valves. The waste sludge drains by gravity to the common buried 8-inch sludge/scum pipeline that discharges into a sewer for treatment at RP-1. The actuated waste sludge valves are used to regulate the sludge blanket levels in the clarifiers. The sludge blanket should be kept low less than 3 ft deep unless there is an intentional desire to ferment primary solids for biological phosphorus removal. The sludge wasting rates will be set to maintain the desired sludge blanket depths.

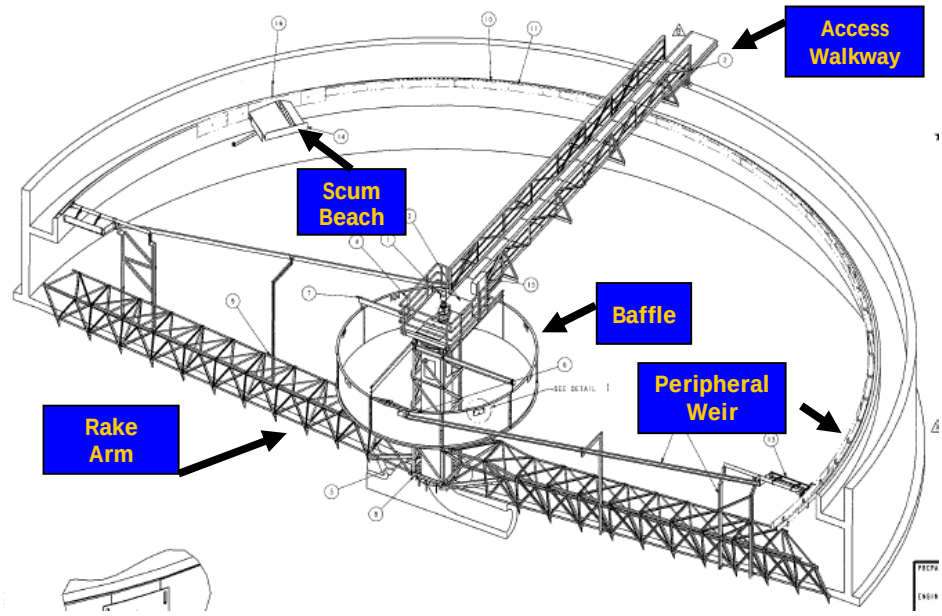

Figure 3-4: Primary Clarifier Cut-Away

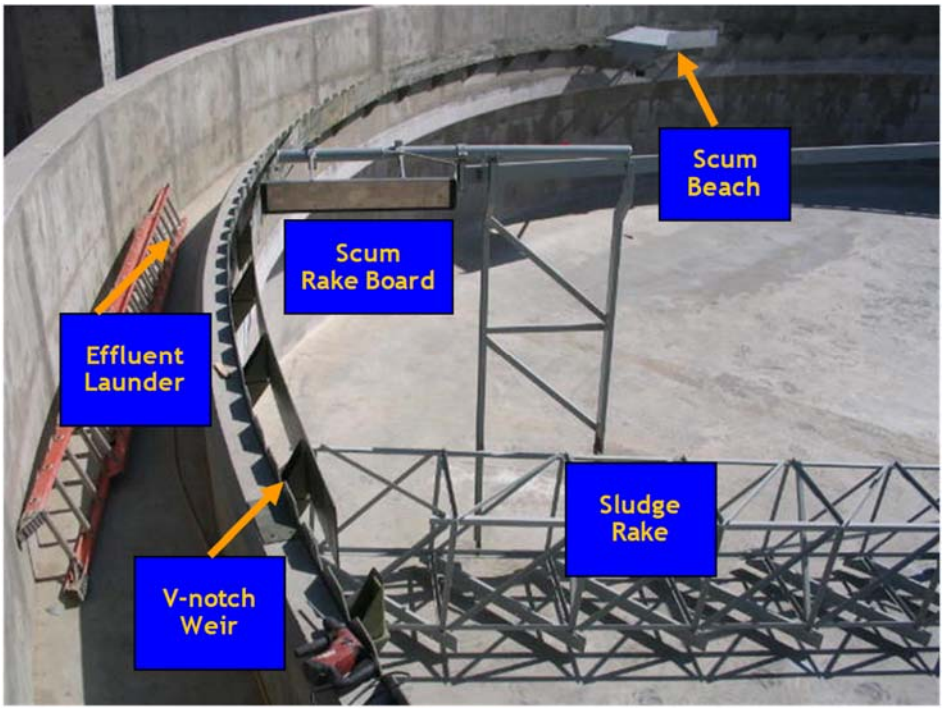

Figure 3-5: Primary Clarifier Internal Components

Figure 3-6: Primary Clarifier Stilling Well and Sludge Hopper

Figure 3-7: Primary Sludge Wasting System

3.2.2.2 Upstream and Downstream Unit Processes

How the upstream unit affects this process: The two primary clarifiers downstream were designed to receive equal flow from the primary influent flow splitter. If flow is unequal then the loading to an individual clarifier will be greater. Unequal flow split will tend to overload one primary clarifier more than the other unit. Unequal flow split could occur if launder weirs at the primary influent splitter are blocked with debris or if the weirs are no longer level. This will result in lower TSS and BOD removal efficiency.

How this unit affects the downstream process:
The primary clarifiers feed the downstream secondary treatment system. In addition, the waste sludge and scum are sent to RP-1. Under normal operating conditions the primary clarifiers impact the secondary treatment system in a number of ways:

- Removing too few solids – this results in more loading to the secondary treatment system, greater demand for aeration and higher Mixed Liquor Suspended Solids carried in the Biological Nutrient Removal system

- Wasting too regularly – this results in loss of the sludge blanket and hence loss of fermentation occurring in the primary clarifier tanks. This reduces production of volatile fatty acids beneficial for biological phosphorus removal and rapid denitrification.

- Losing control of wasting – if waste sludge valves remain open, the primary clarifier will create additional bypass flow to RP-1 to the capacity of the existing 8-inch plant drain.

3.2.2.3 Design Criteria

Table 3-3: Primary Clarifier Design Criteria			
Parameter	**Units**	**Value**	**Reference**
Primary Clarifier:			
Number	units	2	
Maximum Hydraulic Loading : 2 units in service	gpd/ft^2	1,617	Calculation at PDWF
Hydraulic Retention Time at PDWF (all in service) Hydraulic Retention Time at PDWF (one out of service) Hydraulic Retention Time at ADWF (all in service)	hrs	1.58 0.8 3.2	
Type		Circular	
Model		Westech CLC15	
Diameter	ft	105	
Side Water Depth	ft	12.93	Westech D204
Inside Tank Wall Height	ft	15	
Side Water Depth Volume Cone Volume Total Volume (each) Total Volume (each)	ft^3 ft^3 ft^3 gallons	111,981 11,661 123,642 924,842	
Drive Unit		0.33 Hp 22,000 ft.lbs continuous running torque	Westech D201
Influent Column		3'6" O.D.	Westech D201
Center Feed Well Dimensions	ft	22 Diameter 5 SWD	Westech D201
Rake Arm Dimensions	ft	5 high x 4 wide tapering to 4 x 4 square	Westech D212
Rake Arm Speed	Rpm	0.031	Primary Clarifier O&M.pdf Pg 119
Rake Arm Details		Segmented blades, sludge scraper blades and adjustable squeegees	
Scum Box (L x W)	ft	3 x 5	Westech D211
Scum skimmer blade (full radius)	ft	41.5	
Primary Sludge Valves:			Sludge & Scum Valves O&M.pdf
Number		2	
Type and Model		Actuated Plug AWMA	

Table 3-3: Primary Clarifier Design Criteria			
Parameter	**Units**	**Value**	**Reference**
Size	inch	8	
Primary Sludge Flow Meters:			Endress and Hauser Mag Flowmeter O&M2.pdf
Number		2	
Type and Model		Endress&Hauser Magflow	
Size	Inch	4	
Capacity		0 – 400 gpm	
Primary Scum Valve:			Sludge & Scum Valves O&M.pdf
Number		1	
Type and Model		Actuated Plug	
Size	Inch	6	
Primary Scum Wetwell			D-6579-44
Number		2	
Operating Volume (each) Maximum Volume (each)	ft^3 ft^3	226 284	
Spray Nozzles		4	
Level Sensor Type and Model		Differential Pressure Foxcom IDP-10D	Differential Pressure Transmitter Section 13563.pdf
Level Sensor Range	ft	0 - 15	

3.2.2.4 Process Control and Automation

Table 3-4: Primary Clarifier Drive Control			
Equipment Tag#	RTU	Alarms	Reference
SLC-2110	6	Failure – Motor Overload High Torque	P06
SLC-2120	6	Failure – Motor Overload High Torque	P06
Interlocks	In all control modes, the collector shall have a hardwired interlock to stop when at high-high torque (110% or 24,200 ft-lbs).		
Local Manual	Local manual control of the Sludge Collector is provided through the HAND-OFF-AUTO (H-O-A) selector switch mounted on the local control panel. When HAND is selected, the collector runs.		
Remote Manual	Remote manual control is provided through the RTU. When the H-O-A selector switch at the Sludge Collector is in the AUTO position, the Sludge Collector is controlled from the HMI using operator manual commands.		

Table 3-5: Primary Sludge Valve Control			
Equipment Tag#	RTU	Alarms	Reference
V-2172	6	Failure – Valve Low flow warning	P06
V-2182	6	Failure – Valve Low flow warning	P06
Interlocks	The primary sludge valves are interlocked to prevent opening while primary scum is discharging to RP-1.		
Local Manual	Local Manual control of the primary sludge valve is provided through the LOCAL-OFF-REMOTE (L-O-R) selector switch and OPEN-STOP-CLOSE (O-S-C) push buttons mounted near the valve. In the LOCAL position, the valve is operated using the OPEN-STOP-CLOSE push buttons.		
Remote Manual	Remote manual control is provided through the RTU. When the L-O-R selector switch near the valve is in the REMOTE position and MANUAL is selected at the HMI, the valve can be opened and closed from the HMI using manual operator commands.		
Remote AUTO	Remote automatic control is being provided through the RTU. When the L-O-R selector switch near the valve is in the REMOTE position and AUTO is selected at the HMI, the valve is opened and closed based on an operator adjustable timed cycle and flow is modulated through a flow control set point based on an operator selectable HMI target. The operator enters a frequency of operation (the period between the beginning of one primary sludge wasting cycle and the beginning of the next cycle, operator selectable at the HMI from 0-120 minutes, initially set at 60 minutes) and the duration of primary sludge wasting operation (selectable at the HMI from 0-30 minutes, initially set at 15 minutes). When a primary sludge wasting cycle is initiated, the primary sludge control valve opens to 100%. When the cycle is completed the valve closes completely.		

Table 3-6: Primary Scum Valve Control			
Equipment Tag#	RTU	Alarms	Reference
V-2172	6	Failure – Valve	P06
Interlocks	The primary scum valve is interlocked to prevent opening while primary sludge is discharging to RP-1.		
Local Manual	Local Manual control of the primary scum valve is provided through the LOCAL-OFF-REMOTE (L-O-R) selector switch and OPEN-STOP-CLOSE (O-S-C) push buttons mounted near the valve. In the LOCAL position, the valve is operated using the OPEN-STOP-CLOSE push buttons.		
Remote Manual	Remote manual control is provided through the RTU. When the L-O-R selector switch near the valve is in the REMOTE position and MANUAL is selected at the HMI, the valve can be opened and closed from the HMI using manual operator commands.		
Remote Auto	Remote automatic control is provided through the RTU. When the L-O-R selector switch near the valve is in the REMOTE position and AUTO is selected at the HMI, the valve will open when a scum pit high level set point is reached and primary sludge is not being discharge to RP-1. The valve will close after an operator adjustable low level set point is reached.		

3.2.3 Chemical Feed System

3.2.3.1 Description

Chemicals may be applied to the primary influent at RP-4 for two purposes. The main purpose of applying chemicals is to remove phosphorus by precipitation of a metal-phosphate complex in the primary sludge. In addition, chemicals can be applied to achieve chemically enhanced primary treatment (CEPT). In this process a coagulant (ferric chloride at RP-4) and polymers in the form of organic polyelectrolytes, are added to the primary influent. A coagulant neutralizes the electrical charges of particles in the water which causes the particles to clump together. Wastewater solids are typically negative so a positively charged chemical (like ferric chloride is used to neutralize the surface charge). A polymer is added as a flocculent to add density to slow-settling flocs and add toughness to the flocs so that they will not break up during the mixing and settling processes. Coagulants are always used in a CEPT process whereas a flocculant may not always be required. Flocculants can be used to reduce flocculation time for example when flows are very high. Typically cationic polymers (or non-ionic polymers) are used in wastewater as biological solids are negatively charged. If significant quantities of coagulant chemicals are used (for example in drinking water residual solids thickening) anionic polymers may be used.

The chemicals cause the small suspended particles to clump together via the processes of coagulation and flocculation. Small particles do not settle well, but the larger particle aggregates, or flocs, settle faster and so enhance treatment efficiency, measured as removal of solids, organic matter and nutrients from the wastewater.

CEPT allows the primary clarifiers to operate at higher overflow rates, while still maintaining high removal rates of total suspended solids (TSS) and biochemical oxygen demand (BOD). With chemical addition, well designed primary clarifiers with significant chemical dose can remove up to 75% TSS and 45% BOD demand. However, the ferric chloride dose applied for phosphorus removal is insufficient to achieve these removals. (Phosphorus removal is required at RP-4 to ensure that the final effluent is low in phosphorus for use by Reliant Energy. Reliant Energy requires the phosphorus concentration in the effluent be less than 1.0 mg/L as P to prevent algae growth in cooling systems).

Chemically enhanced primary treatment systems generally dose up to 100 mg/L of commercial $FeCl_3$. For phosphorus removal the chemical dose is typically 30 – 45 mg/L of commercial $FeCl_3$. Polymer dose is expected to be between 0.25 and 0.50 mg/L. For RP-4 this means that a primary clarifier can be removed from service and if necessary chemicals can be applied to the influent and the remaining primary clarifier will achieve similar performance as two primary clarifiers in service. In addition, as influent loads increase, CEPT will also allow RP-4 to increase the nominal treatment capacity of downstream aeration basins, by removing additional BOD_5 and TKN in the primary tanks.

Table 3-7: Primary Clarifier Efficiencies – Conventional versus CEPT

	TSS	BOD	TP	TKN
	(%)	(%)	(%)	(%)
Conventional Primary Treatment	55	35	20	15
Chemically Enhanced Primary Treatment	85	57	85	37

Two chemical metering pumps deliver ferric chloride to the influent pump station manhole through double containment piping. At the influent pump station manhole a pressure sustaining valve maintains the back pressure on the ferric chloride dosing line to ensure that the chemical is not siphoned into the flow. The ferric chloride dose is determined by the operator to ensure phosphorus removal in the secondary treatment system.

Figure 3-8: Ferric Chloride Tank and Metering Pumps

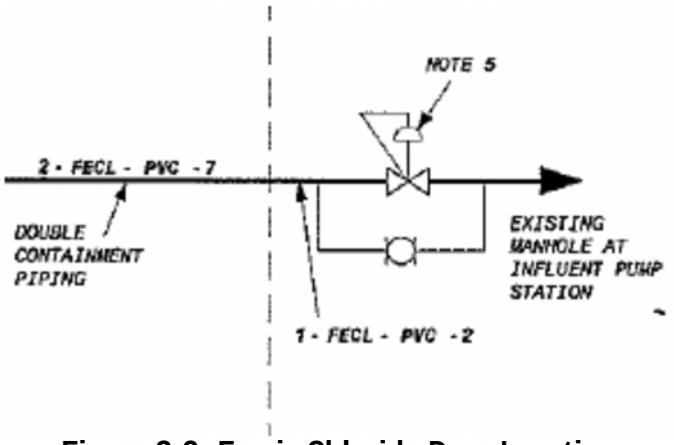

Figure 3-9: Ferric Chloride Dose Location

Two chemical metering pumps and emulsion polymer activation systems deliver polymer into a chemical diffuser pipe installed at the midpoint of the primary influent pipe as it enters the rapid mix section of the primary influent flow splitter. The polymer dose will be determined by the operator to ensure good flocculation in the primary clarifiers. A submersible mixer rapidly mixes any polymer added and also maintains solids in suspension.

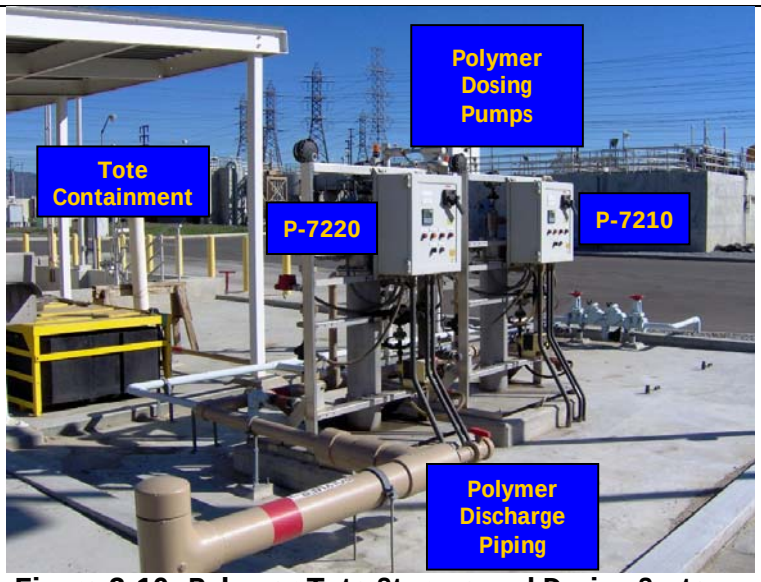

Figure 3-10: Polymer Tote Storage and Dosing Systems

The neat emulsion polymer is activated using a Fluid Dynamics dynaBLEND® Automatic Polymer Activation, Dilution & Feed System. This unit utilizes a 5-stage process to achieve polymer-water blending. A pressure drop across the system's variable water control orifice produces a high velocity water jet (50+ ft/sec.), which impinges on the concentrated polymer as it enters the high turbulence zone of the mixing chamber. This energy releases the emulsifier (oil), instantaneously exposing the polymer and dispersing it in the dilution water. The polymer transforms into an extended, undamaged, string of exposed polymer charge sites.

As the polymer molecules extend, they become "tangled". The high turbulence zone serves to "untangle" the polymer, producing a homogenous blend. Exit ports split the solution flow, allowing the re-circulation of polymer solution in the high turbulence zone. Recirculation re-exposes polymer solution to additional, non-damaging, high mixing energy. This creates a higher level of polymer activation and a more thorough dilution. The re-circulation of polymer solution into the high turbulence zone also promotes blending of the concentrated neat polymer. The polymer solution leaves the high turbulence zone and travels through a series of concentric chambers where the mixing energy diminishes evenly into laminar flow. The concentric chambers further activate the polymer and prevents polymer from "short-circuiting" the process, assuring consistent performance.

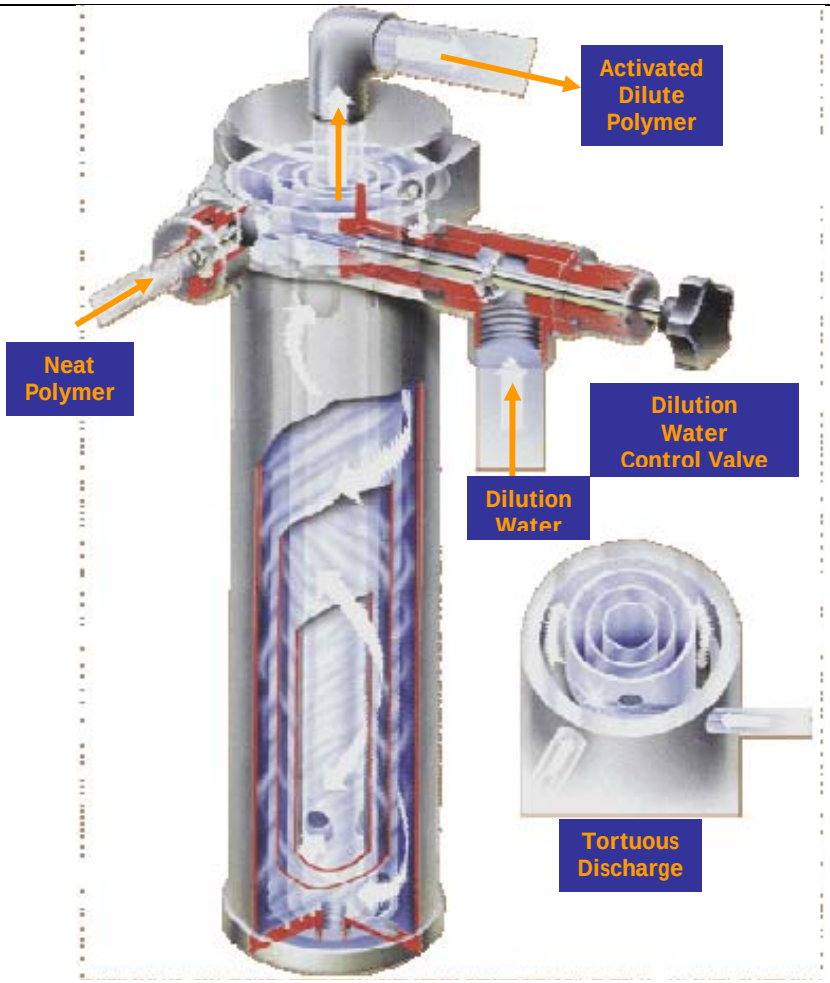

Figure 3-11: Dynablend Polymer Activation Unit

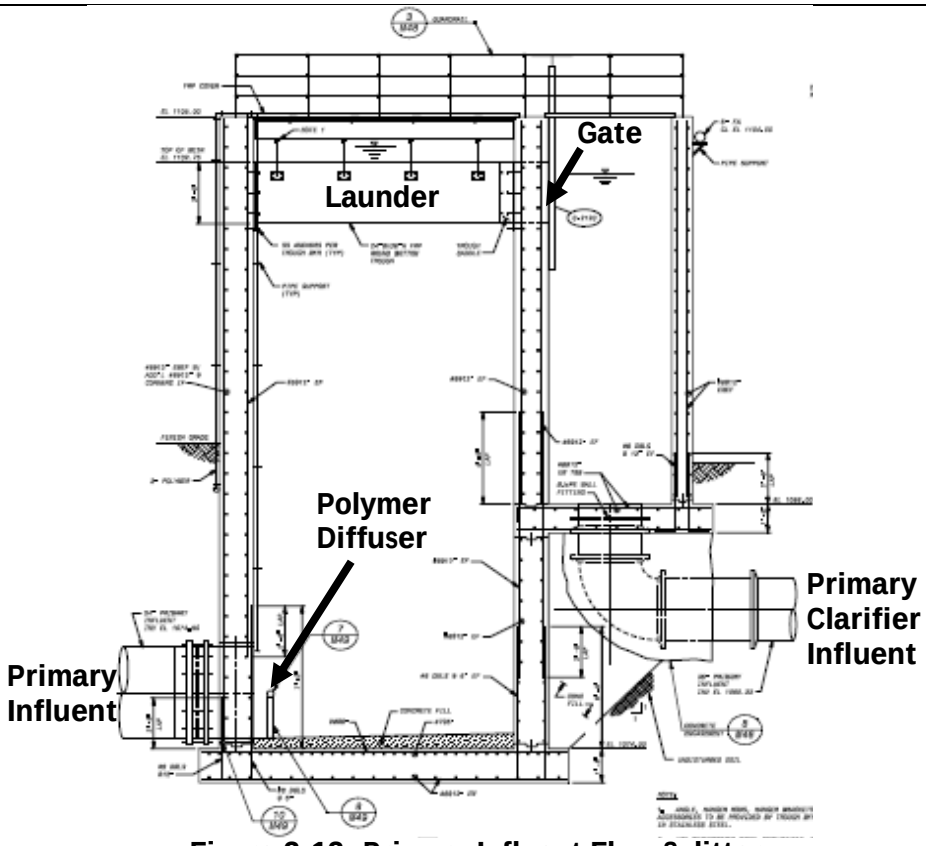

Figure 3-12: Primary Influent Flow Splitter

3.2.3.2 Upstream and Downstream Unit Processes

How the upstream unit affects this process: The ferric chloride dosing system is not impacted by any upstream unit process. The polymer dosing systems require dilution water to activate the concentrated emulsion polymer and carry the polymer to the Primary Influent Flow Splitter. The dilution water used is potable. If the potable water is off-line then the dilution water will not operate and the polymer dosing systems cannot be operated. If the potable water distribution system supplies a pressure that is too low, the polymer dosing systems will not operate.

How this unit affects the downstream process: The ferric chloride dose impacts the primary clarifiers in two ways:

a) A dose that is too low means that insufficient phosphorus is precipitated in the primary clarifiers

b) A dose that is too high will mean that the secondary treatment system may operate poorly as phosphorus is an essential nutrient for biomass growth. In addition the pH of the secondary effluent could drop below the effluent specification if excessive ferric

chloride is used coupled with poor denitrification performance in the activated sludge process.

If polymer is being used, then an insufficient polymer dose will result in inadequate primary removal performance, increasing the load to the secondary system and possibly reducing the capacity of the secondary system. If too much polymer is used it is wasteful of an expensive chemical.

3.2.3.3 Process Design Criteria

Table 3-8: Ferric Chloride Dosing System Design Criteria			
Parameter	**Units**	**Value**	**Reference**
Pumps:			
Number	units	2	pulsar_iom_dlcm_revE_en.pdf IEUA RP-4 Taisei Pulsar Pump Data Sheets 10-17-08.pdf
Type		Pulsafeeder diaphragm pump	
Model		Mechanical Shadow 55BF	
Motor horsepower	hp	1	
Diaphragm		Composite TFE faced elastomer	
Motor Speed	rpm	1725	
Pumping Flow	gph	2.6 – 53.1	
Operating Pressure	psig	50	
Maximum Pressure	psig	75	
Controller		DLCM with NEMA 4X	
Tank:			
Number	units	1	Chem.Tanks.OM.1.pdf
Diameter	ft	10	
Side Depth	ft	14	
Volume	ft^3	1,100	
Construction Material		Hetron 922 Fiberglass Reinforced Resin	
Liner		Nexus Veil Interior Liner	

Table 3-9: Polymer Pumps Design Criteria			
Parameter	**Units**	**Value**	**Reference**
Pump:			
Number	units	2	Inland Empire Utilities F107595 O&M-w-comments.pdf
Type		Milton Roy LMI diaphragm pump	
Model		B931-76R	
Serial Number		0507970316-1	
Motor Voltage/Amps	V/A	120/1.5	
Pumping Flow	gph	0 - 4.5	
Maximum Pressure	psig	50	
Dilution System:			
Number	units	2	
Type		Fluid Dynamics Dynablend	
Controller		Level 4	

3.2.3.4 Process Control and Automation

Table 3-10: Primary Clarifier Ferric Chloride Dosing Pump Control			
Equipment Tag#	RTU	Alarms	Reference
P-7110, P-7120	6	Failure	P06
Interlocks	The metering pumps have hardwired interlocks in all control modes to stop the pump when the high discharge pressure switch trips.		
Local Manual	Local control of the metering pump is provided through a local panel on the metering pump. When the DLCM panel is in MANUAL mode, the pump runs and flow can be increased or decreased by pressing the UP or DOWN arrows.		
Local Auto	None		
Remote Manual	When the DLCM panel is in ANALOG MODE, remote manual control shall be provided through the RTU. The pump ON/OFF is controlled from the HMI using operator manual commands. The speed and stroke length can be manually adjusted from the HMI.		
Remote Auto	Remote automatic control is provided through the RTU when the DLCM local panel is in ANALOG MODE and AUTO is selected at the HMI. The pump feed, speed and stroke length are controlled by the influent flow pacing signal and the dosage (adjustable at the HMI from 10-50 mg/l) entered by the operator. Chemical dose is determined using the following operator inputs and calculations:		

	Maximum Dosage as 100% concentration (Not commercial Strength!) $MD_{Ferric\ Chloride}$ - Maximum Dosage – 25 mg/L Conc - Chemical concentration (Expressed as a decimal adjustable at HMI) $Conc_{Ferric\ Chloride}$ - 0.43 Density - Chemical density (lbs/gal, adjustable at the HMI) $Conc_{Ferric\ Chloride}$ - 12.24 *Inputs from DCS* Flow Rate - Process flow at chemical feed point (0 - 40 MGD) *Commercial Chemical Feed Rate Calculation* **(Note: For Ferric Chloride)** FR - Feed rate (gallons/hour) FR = [Dosage x 8.34 x Flowrate] / [Conc x Density x 24] *Speed and Stroke Length Calculations:* FR(Max) – Maximum Pump capacity (GPH, adjustable at the HMI) SP(T_g) - Target pump speed (%, adjustable at the HMI in Remote Manual) SP(Max) - Maximum pump speed (100 %) ST(Min) - Minimum stroke length (%, adjustable at the HMI – initial 20%) ST(Max) – Maximum stroke length (100%) ST(T_g) – Target stroke (%, adjustable at HMI in Remote Manual)

	Calculate Target Stroke % as Follows: **(Stroke is Proportional to Dose)** ST(Tg) = Dosage x Conc x{ST(MAX) – ST(MIN)}/MD + ST(MIN) **Calculate Target Speed % as Follows:** **(Speed is Proportional to Flow Rate)** SP(Tg) = FR/FR(Max) x 1/ST(Tg) x 10,000

Table 3-11: Coagulant Polymer Activation and Dosing Pump Control			
Equipment Tag#	RTU	Alarms	Reference
Poly-7210 Poly-7220	6	Failure	P20
Interlocks	The polymer activation system and pumps have hardwired interlocks in all control modes to stop the system when the high discharge pressure switch trips or the low dilution water pressure trips.		
Local Manual	None		
Local Auto	Local Manual control of the polymer activation and dosing units is provided as part of the Dynablend controls. The LOCAL-OFF-REMOTE selector switch in the door of the control panel allows the operator to select the mode of operation for the system. When the selector switch is in LOCAL, the operator can start/stop the polymer system locally from the display. The polymer feed follows the water flow to maintain a fixed solution concentration (which is set by the operator on the display).		
Remote Manual	Remote manual control is provided through the RTU. When remote control is selected at the blender control panel, and MANUAL is selected at the HMI, the blender is controlled from the HMI using operator manual commands. The neat polymer feed rate (gph) is manually adjusted at the HMI. When the selector switch is in REMOTE, the system starts/stops automatically based on a remote start signal. The polymer pump speed is controlled directly by a remote 4-20 mA pacing signal. Dilution water is manually adjusted.		
Remote Auto	Remote AUTO control is provided through the RTU. When remote control is selected at the blender control panel, and AUTO is selected at the HMI, the blender is controlled from the HMI using flow paced control logic. The neat polymer feed rate (gph) is automatically adjusted at the HMI through a dose calculation. When the selector switch is in REMOTE, the system starts/stops automatically based on a remote start signal. The polymer pump		

	speed is controlled directly by a calculated remote 4-20 mA pacing signal. Dilution water is manually adjusted. Polymer dose is determined using the following operator inputs and calculations: Dosage - Polymer dosage (0-0.5 mg/l neat for cationic and 0-0.25 mg/l neat for anionic, adjustable at the HMI) Flow Rate – Influent flow at feed point (0-30 MGD) Conc – Active polymer concentration by weight expressed as a decimal (0.35, adjustable at the HMI) Density - Polymer density (8.42 lbs/gal, adjustable at the HMI) FR - Feed rate (gallons/hour) FR = [Dosage x 8.34 x Flow Rate] / [Conc x Density x 24]

3.3 OPERATION

3.3.1 Unit Process Control Procedures

The following Unit Process Control Procedure (UPCP) is in place for the primary treatment system at RP-4.

Table 3-12: Preliminary Treatment Unit Process Control Procedures			
Description	**Number**	**Rev. Date**	**Reference**
Primary Treatment	0153-200-001	7/20/2018	UPCP 0153-200-001.doc

3.3.2 Standard Operating Procedures

The following Standard Operating Procedures are in place for the primary treatment system at RP-4.

Table 3-13: Primary Treatment Standard Operating Procedures			
Description	**Number**	**Rev. Date**	**Reference**
Primary Influent Flow Split	0153-200-001	7/20/2018	SOP 0153-200-001 PC Influent Flow Splitter.doc
Primary Clarifier Operation	0153-200-002	7/20/2018	SOP 0153-200-002 PC Operation.doc
Jar Testing	0153-200-003	7/20/2018	SOP 0153-200-003 Jar Testing.doc
Primary Effluent Monitoring and Sampling	0153-200-004	7/20/2018	SOP 0153-200-004 Primary Effluent Sampling.doc
Ferric Chloride Dosing Equipment Operation	0153-200-005	7/20/2018	SOP 0153-200-005 Ferric chloride dosing to PC.doc
Polymer Dosing Equipment Operation	0153-200-006	7/20/2018	SOP 0153-200-006 Polymer dosing to PC.doc
Primary Treatment Monitoring	0153-200-007	7/20/2018	SOP 0153-200-007 Primary Monitoring.doc
Primary Clarifier Gas Detection	0153-200-008	7/20/2018	SOP 0153-200-008 Primary Clarifiers Gas Detection.doc
Ferric chloride Tank Fill	0153-200-009	7/20/2018	SOP 0153-200-009 FeCl3 Tank Fill.doc
Polymer Tote Fill	0153-200-010	7/20/2018	SOP 0153-200-010 Polymer Tote Fill.doc
Use of Safety Showers	0153-200-011	7/20/2018	SOP 0153-200-011 Use of Safety Showers.doc

3.3.3 Abnormal Operating Procedures

For ease of operator troubleshooting, Abnormal Operating Procedures for each of the systems described above are identified in the **Table 3-14** below.

Table 3-14: Primary Treatment Abnormal Operating Procedures

Description	Number	Rev. Date	Reference
Primary Influent Flow Split	0153-200-001	7/20/2018	Operate_PC_Influent_Mixer_in_Hand
Primary Clarifier Operation	0153-200-002	7/20/2018	Operate_PCs_in_Hand Primary_Scum_Pipeline_Flushing Primary_Sludge_Pipeline_Flushing Primary Sludge Wasting in Hand
Jar Testing	0153-200-003	7/20/2018	
Primary Effluent Monitoring and Sampling	0153-200-004	7/20/2018	
Ferric chloride addition	0153-200-005	7/20/2018	Check_FeCl3_Dose_Through_Pump_Drawdown Manual_Pump_Operation_Local_Controller Ferric_Chloride_Spill_Response
Polymer addition	0153-200-006	7/20/2018	Check_Polymer_Dose_through_Pump_Catch
Primary Treatment Monitoring	0153-200-007	7/20/2018	
Primary Clarifier Gas Detection	0153-200-008	7/20/2018	Recalibration_of_LEL_Probes
Ferric chloride tank fill	0153-200-009	7/20/2018	
Polymer Tote Fill	0153-200-010	7/20/2018	
Use of Safety Showers`	0153-200-011	7/20/2018	

3.4 MAINTENANCE

3.4.1 Primary Influent Flow Splitter

3.4.1.1 Flygt Submersible Primary Influent Mixer

The maintenance activities were identified by Flygt in **Table 3-15** as important for maintaining unit process performance.

Table 3-15: Flygt Primary Influent Mixer Recommended Maintenance

Description	Page Number	Reference
Annual Inspection ☐ Remove unit from the flow splitter box to visually inspect and clean any debris and build up on the motor and pump assembly. ☐ Check the propeller/impeller for wear.		Flygt Submersible Mixer.pdf

3.4.2 Primary Clarifier System

3.4.2.1 WesTech Primary Clarifier Drive Assembly

The maintenance activities were identified by WesTech in **Table 3-16** as important for maintaining unit process performance.

Table 3-16: WesTech Primary Clarifier Recommended Maintenance		
Description	**Page #**	**Reference**
Annual Drive Maintenance - Annually, the clarifier should be taken out of service and dewatered. This gives plant personnel an opportunity to inspect all parts of the mechanism, perform adjustments and maintenance to submerged components, touch-up paint, etc.	58	Primary Clarifier O&M.pdf
Annual Drive Maintenance - Shutdown and lockout power to the drive unit. Check and re-tighten all exposed fasteners of the drive. (Refer to the 'Drive Assembly Procedures' drawing for values). - Sample Drive Oil and send to a lab for oil analysis. Replenishment of oil in the drive will be based upon the results of oil analysis.	74 134 (torque values)	Primary Clarifier O&M.pdf
Weekly Drive Maintenance - Check the drive unit oil level weekly. The oil level should be at the middle of the sight glass. Replenish oil as required. Refer to the section on LUBRICATION in the MAINTENANCE AND PARTS category of this manual. If oil is noticeably discolored, it should be drained and filtered through a fine mesh cloth. Any sediment or contaminants should be measured and recorded to preclude future contamination. Some discoloration will occur due to normal dissolving of grease by contact with oil. Change the oil if necessary. - Check drive unit for accumulated condensation at least weekly and in high humidity areas as often as daily. Any condensation must be promptly removed to prevent accumulation of moisture in the	74	Primary Clarifier O&M.pdf

Table 3-16: WesTech Primary Clarifier Recommended Maintenance		
Description	**Page #**	**Reference**
drive unit housing or main bearing.		
Drive Torque Overload Control ☐ Apply spray oil (WD-40 or equal) to the torque box plunger weekly. Check the plunger for smooth movement. For additional information on the torque control device, refer to drawing 7-8222 B1.	72	Primary Clarifier O&M.pdf

BREAK-IN MAINTENANCE REQUIREMENTS	INTERVAL	INITIALS	DATE
Drain and Fill Oil Cavity/Cavities (Before Operating)	0 hours		
Drain and Replace Oil	500 hours		
PREVENTIVE MAINTENANCE REQUIREMENTS			
Grease Cyclo Reducer	M		
Grease Upper Bearing	M		
Oil Main Bearing (each)	W		
Oil Lower Bearing/Main Gear	W		
Drain and Replace Lower Bearing/Main Gear Oil	A		
Oil Torque Box Plunger	W		
INSPECTION REQUIREMENTS			
Inspect Fasteners For Tightness	M/A		
Visually Inspect Drive Mech. for Wear	W/A		
Test Torque Box Limit Switches	W		
Check/Drain Condensate	W		
Check/Drain Particulates	S		
Inspect/Repair Drive Unit Paint	A		
Inspect Torque Control Device	A		

A - ANNUALLY, S - SEMIANNUALLY, M - MONTHLY, W - WEEKLY, D - DAILY

Refer to Equipment Maintenance and Lubrication Summary for specific maintenance and inspection instructions.

Figure 3-13: Westech Primary Clarifier Maintenance Schedule

LUBRICATION LEGEND

ITEM#	DESCRIPTION	AMOUNT TO ADD	* SUGGESTED FREQ. CHECK/ADD
1	CYCLO REDUCER	1 oz.	MONTHLY
2	UPPER BEARING	1 oz.	MONTHLY
3	MAIN BEARING	2 oz./ea.	WEEKLY
4	MAIN GEAR & LOWER BEARING	** AS REQ'D	WEEKLY
5	T.BOX PLUNGER	*** AS REQ'D	WEEKLY

ALL GREASE TO BE LITHIUM BASED EP2
* ACTUAL FREQ. SHALL BE DETERMINED BASED UPON SITE CONDITIONS
OIL MAY BE ANALYZED FOR EXTENDED CHANGE INTERVALS
NOTES: 1 oz. (VOLUME) IS APPROXIMATELY 5 SHOTS FROM A GREASE GUN. SINCE GUN SIZES VARY, THE OPERATOR SHOULD DETERMINE THE NUMBER OF SHOTS OF GREASE PER OUNCE FOR HIS GREASE GUN.
** DRAIN CONDENSATE WEEKLY, CHANGE YEARLY W/APPROX. 8-1/2 GAL. ISO GRADE 150 EP GEAR OIL.
*** SPRAY OIL

C42-OGL-04

Figure 3-14: WesTech Primary Clarifier Lubrication Schedule

3.4.2.2 Primary Sludge and Scum Waste Actuated Valves

The maintenance activities were identified by Dezurik Water Controls in **Table 3-17** as important for maintaining unit process performance.

Table 3-17: Dezurik Valves Recommended Maintenance

Description	Page #	Reference
☐ Exercise valve every thirty days ☐ Lubricate only upon disassembly	9 & 11	Sludge & Scum Valves O&M.pdf

The maintenance activities were identified by AUMA in Figure 3-15 as important for maintaining unit process performance.

The maintenance activities were identified by AUMA in Figure 3-15 as important for maintaining unit process performance.

After commissioning, check for damages on paint of multi-turn actuator. Do a thorough touch-up to prevent corrosion. Original paint in small quantities can be supplied by AUMA.

AUMA multi-turn actuators require very little maintenance.
Precondition for reliable service is correct commissioning.

Seals made of elastomers are subject to aging and must therefore regularly be checked and, if necessary, exchanged.

It is also very important that the O-rings at the covers are placed correctly and cable glands fastened firmly to prevent ingress of dirt or water.

We recommend:

- If operated seldom, perform a test run about every 6 months. This ensures that the actuator is always ready to operate.
- Approximately six months after commissioning and then every year check bolts between actuator and valve/gearbox for tightness. If required, re-tighten applying the torques given in table 1, page 5.
- For multi-turn actuators with output drive type A: at intervals of approx. 6 months press in several squirts of ball bearing grease at the lubrication nipple with grease gun.

- **Lubrication of the valve stem must be done separately.**

The gear housing is filled with lubricant in the factory.
A grease change is recommended after the following operation time:

- If operated seldom after 10 - 12 years
- If operated frequently after 6 - 8 years

Figure 3-15: AUMA Actuator Maintenance

3.4.2.3 Primary Scum Level Sensor

No maintenance activities were identified by Foxcom, however some practical actions as shown in **Table 3-18** are important for maintaining unit process performance.

Table 3-18: Scum Wetwell and Level Sensor Recommended Maintenance

Description	Frequency
Inspect level of the scum wetwells and confirm that the levels are approximately equal and consistent with the level sensor value	Weekly
Confirm level of the scum wetwell falls when scum is wasted and scum level sensor follows this wasting process	Weekly
Clean the external housing of the scum wetwell level sensor of vegetation and other	Monthly

Table 3-18: Scum Wetwell and Level Sensor Recommended Maintenance	
Description	**Frequency**
contaminants	

3.4.2.4 Primary Sludge Flow Meters

The following maintenance activities were identified by Endress and Hauser as important for maintaining unit process performance.

Table 3-19: Endress and Hauser Flow Meter Recommended Maintenance		
Description	**Page Number**	**Reference**
Exterior Cleaning	66	Endress and Hauser Mag Flowmeter O&M2.pdf
Seal Replacement	66	
Calibration (if necessary)	116	

3.4.3 Chemical Feed System

3.4.3.1 Ferric Chloride Dosing Pumps

The Ferric chloride pumps are branded as DLCM = **D**igital **L**ogic **C**ontroller with Variable **M**otor Speed. The maintenance activities for the DLCM pumps were identified by Pulsafeeder as follows:

13. General Repairs

The DLCM contains no user-serviceable components within its main enclosure. In the un-likely event that your DLCM needs to be repaired, PULSAFEEDER has implemented a replacement program. Fill out the Diagnostic form included in the back of this manual, then contact PULSAFEEDER Customer Service at (585) 292-8000 to enter a replacement order

Within 24-hours a DLCM will be shipped to you in a returnable container. Remove the replacement DLCM from the packaging and swap it with the DLCM needing repair. Return the DLCM in the same packaging within **30 days**. Make sure that there are no components missing from the returned unit – you will be charged accordingly. Upon receipt of the unit at PULSAFEEDER, an evaluation will be made within **14 days**. The unit returned will be refurbished for use in the replacement program.

The DLCM has been designed to allow you to replace a defective unit without disturbing the wiring and conduit. The replacement unit will be shipped with the conduit adapter and attached field wiring board (refer to *Figure 2*). It is left to your discretion as to whether or not these components are used for the replacement. (Typically, these are left attached to the wire/conduit and form a 'plug' for the replacement unit.) When the original unit is returned to PULSAFEEDER, the unused conduit adapter ("new or "original") must be attached to the original unit.

Figure 3-16: Pulsafeeder Ferric Chloride Pumps Maintenance

3.4.3.2 Polymer Dosing System

Lubrication Requirements per ..\Primary Vendor O&M\Polymer\Inland Empire Utilities F107595 O&M-w-comments.pdf

Please match your equipment (on your Bill of Materials) with the correct equipment below.

COMPONENT	RECOMMENDED SOLVENTS	M	Q	S	AS REQUIRED	EST. MAN-HOURS	BY SERVICE HOURS
ASCO Solenoid Valve	DOW CORNING® 111 or equivalent			X			
Skinner Solenoid Valve	Mild soap and water			X			
KING Rotameter	Mild soap and water				X		
Polymer Check Valve	Use Polymer solvent or kerosene to dissolve emulsion or dispersion polymers. Use warm water to dissolve Mannich polymers.	X					
COMPONENT	**RECOMMENDED LUBRICANTS**	**M**	**Q**	**S**	**AS REQUIRED**	**EST. MAN-HOURS**	**BY SERVICE HOURS**
Goulds SSV Booster Pump	Do Not intermix grease bases (lithium, sodium, etc.). Completely purge old grease if changing grease base..		Q		Frequency depends on duty.	0.5	
LMI metering pumps		No internal lubrication required					

Preventative Maintenance Requirements

Please match your equipment (on your Bill of Materials) with the correct equipment below.

COMPONENT	MAINTENANCE TASK	D	M	S	A	AS NEEDED	BY SERVICE HOURS	EST. MAN-HOURS	SPECIAL TOOLS NEEDED
ASCO Solenoid Valve	Clean strainer					X		.5	
ASCO Solenoid Valve	Open, Inspect and Clean internal parts if operating sluggishly or with excessive noise or leaking					X		1	
ASCO Solenoid Valve	Operate valve to ensure proper opening and closing		X					.1	None
Efector Thermal Flow Sensor	Clean tip and verify operation		X					0.1	
KING Rotameter	Clean					X		.1	
Goulds SSV Booster Pump	Lubricate motor bearings per chart in Goulds manual					Max: Quarterly Min: Biannually		0.5	None
LMI Electronic Metering Pumps	Replace elastomeric parts				X			2	None
Polymer Check Valve	Inspect and clean		X					1	
Skinner Solenoid Valve	Clean strainer				A	X		.5	
Skinner Solenoid Valve	Open, Inspect and Clean internal parts if operating sluggishly or with excessive noise or leaking				A	X		1	
Skinner Solenoid Valve	Operate valve to ensure proper opening and closing		X					.1	None

Figure 3-17: Polymer System Maintenance

3.5 DESIGN CRITERIA

3.5.1 Flygt Primary Influent Flow Splitter Box

Table 3-20: Primary Influent Splitter Box Design Criteria			
Parameter	**Units**	**Value**	**Reference**
Rapid Mix Tank			
Tank Dimensions (L x W x SWD)	ft	20' x 12'6" x 28.75'	D-6579-24
Tank Volume	gallons	53,762	D-6579-24
Launder Dimensions (L x W x D)	ft	12'6x2'x3'	D-6579-24
# of Tank Volume Turnovers by mixing	#/hr	5.4	
Tank retention time at AAD	minutes	5.5	
Tank Retention time at PF	minutes	2.4	
Flow Split Section			
Influent Split Dimensions (L x W x SWD)	ft	6' x 6' x 15.8'	D-6579-24
Influent Split	#	3	D-6579-24
Isolation Gates	#	3	D-6579-24
Gate Type and Model	ft	Weir, Whipps, 923	Whipps Dwg. BC-923-215
Gate Dimensions (L x W)	ft	3'x2'	BC-923-215

3.5.2 Flygt Primary Influent Flow Splitter Submersible Mixer

Table 3-21: Primary Influent Splitter Box Mixer Design Criteria			
Parameter	**Units**	**Value**	**Reference**
Mixer:			
Number	units	1	Flygt Submersible Mixer.pdf Page 12
Type		Submersible	
Model		Flygt 4640 SF	
Motor horsepower	hp	4	
Shaft horsepower	hp	3.2	
% of Full Load	%	80	
Power Input	kW	3.1	
Impeller Code	#	083709SF	
Impeller Speed	rpm	855	
Propeller Diameter	inches	14 .4375	
Propeller Blade Angle	degrees	9	
Pumping Flow	gpm	4,840	

3.5.3 Westech Primary Clarifiers

Table 3-22: Primary Clarifier Design Criteria			
Parameter	**Units**	**Value**	**Reference**
Primary Clarifier:			
Number	units	2	
Maximum Hydraulic Loading : 2 units in service	gpd/ft^2	1,617	Calculation at PDWF
Hydraulic Retention Time at PDWF (all in service) Hydraulic Retention Time at PDWF (one out of service) Hydraulic Retention Time at ADWF (all in service)	hrs	1.58 0.8 3.2	
Type		Circular	
Model		Westech CLC15	
Diameter	ft	105	
Side Water Depth	ft	12.93	Westech D204
Inside Tank Wall Height	ft	15	
Side Water Depth Volume Cone Volume Total Volume (each) Total Volume (each)	ft^3 ft^3 ft^3 gallons	111,981 11,661 123,642 924,842	
Drive Unit		0.33 Hp 22,000 ft.lbs continuous running torque	Westech D201
Influent Column		3'6" O.D.	Westech D201
Center Feed Well Dimensions	ft	22 Diameter 5 SWD	Westech D201
Rake Arm Dimensions	ft	5 high x 4 wide tapering to 4 x 4 square	Westech D212
Rake Arm Speed	Rpm	0.031	Primary Clarifier O&M.pdf Pg 119
Rake Arm Details		Segmented blades, sludge scraper blades and adjustable squeegees	
Scum Box (L x W)	ft	3 x 5	Westech D211
Scum skimmer blade (full radius)	ft	41.5	
Primary Sludge Valves:			Sludge & Scum Valves O&M.pdf
Number		2	
Type and Model		Actuated Plug AWMA	

Table 3-22: Primary Clarifier Design Criteria			
Parameter	**Units**	**Value**	**Reference**
Size	inch	8	
Primary Sludge Flow Meters:			Endress and Hauser Mag Flowmeter O&M2.pdf
Number		2	
Type and Model		Endress&Hauser Magflow	
Size	Inch	4	
Capacity		0 – 400 gpm	
Primary Scum Valve:			
Number		1	Sludge & Scum Valves O&M.pdf
Type and Model		Actuated Plug	
Size	Inch	6	
Primary Scum Wetwell			D-6579-44
Number		2	
Operating Volume (each) Maximum Volume (each)	ft^3 ft^3	226 284	
Spray Nozzles		4	
Level Sensor Type and Model		Differential Pressure Foxcom IDP-10D	Differential Pressure Transmitter_Section 13563.pdf
Level Sensor Range	ft	0 - 15	

3.5.4 Primary Sludge Actuated Valves

Table 3-23: Primary Sludge Actuated Valve Design Criteria			
Parameter	**Units**	**Value**	**Reference**
VALVE			
Number	#	2	Sludge & Scum Valves O&M.pdf
Style		Eccentric Plug	
Model		Dezurik PEC	
Size	inches	8, welded in nickel seat	
Body Material		Cast Iron, ASTM A126, Class B	
Packing		Acrylonitrile-Butadiene	
Plug Facing		Chloroprene	
Temp Rating	ºF	180	
Pressure Rating	psig	175	
ACTUATOR			
Number	#	2	
Model		SARBV07.5-13B/GS80.3	
Motor Model	#	VD63-4/45	
Motor	hp	1/8	
Motor Speed	rpm	1680	
Power	volts	480	
Position Transmitter		4 – 20mA output	
Potentiometer	%	0 – 100%	
NEMA Rating		4X/6	
Operating time	seconds	60	
Stroke		90	
Number of turns		13	
Service		AWWA	
Output Drive		Machined Coupling	
Open/Close Position		Limit Switches	

3.5.5 Primary Sludge Flow Meters

Table 3-24: Primary Sludge Flow Meter Design Criteria			
Parameter	**Units**	**Value**	**Reference**
Magnetic Flow Meter:			
Number	units	2	Endress and Hauser Flow Meter nameplate
Throat size	inches	6	
Calibration Tolerance	%	0.5	
Maximum capacity	gpm	400	

3.5.6 Primary Scum Wetwell and Actuated Valve

Table 3-25: Primary Scum Actuated Valve & Level Sensor			
Parameter	**Units**	**Value**	**Reference**
VALVE			
Number	#	1	Sludge & Scum Valves O&M.pdf
Style		Eccentric Plug	
Model		Dezurik PEC	
Size	inches	6, welded in nickel seat	
Body Material		Cast Iron, ASTM A126, Class B	
Packing		Acrylonitrile-Butadiene	
Plug Facing		Chloroprene	
Temp Rating	ºF	180	
Pressure Rating	psig	175	
ACTUATOR			
Number	#	1	
Model		SARBV07.5-13B/GS80.3	
Motor Model	#	VD63-4/45	
Motor	hp	1/8	
Motor Speed	rpm	1680	
Power	volts	480	
Position Transmitter		4 – 20mA output	
Potentiometer	%	0 – 100%	
NEMA Rating		4X/6	
Operating time	seconds	60	
Stroke	Degree	90	
Number of turns		13	
Service		AWWA	
Output Drive		Machined Coupling	
Open/Close Position		Limit Switches	
SCUM Wetwell Level Sensor			Differential Pressure Transmitter_Section 13563.pdf
Number	#	1	
Model		IDP-10D	
Range	ft	0 to 15	
Output Signal	mA	4 - 20	
Enclosure		Explosion Proof	
Seal Type		Diaphragm	

3.5.7 Ferric Chloride Chemical Feed System

Table 3-26: Ferric Chloride Dosing System Design Criteria			
Parameter	**Units**	**Value**	**Reference**
Pumps:			
Number	units	2	IEUA RP-4 Taisei Pulsar Pump Data Sheets 10-17-08.pdf pulsar_iom_dlcm_revE_en.pdf
Type		Pulsafeeder diaphragm pump	
Model		Mechanical Shadow 55BF	
Motor horsepower	hp	1	
Diaphragm		Composite TFE faced elastomer	
Motor Speed	rpm	1725	
Pumping Flow	gph	2.6 – 53.1	
Operating Pressure	psig	50	
Maximum Pressure	psig	75	
Controller		DLCM with NEMA 4X	
Tank			
Number	units	1	Chem.Tanks.OM.1.pdf
Diameter	Ft	10	
Side Depth	ft	14	
Volume	ft^3	1,100	
Construction Material		Hetron 922 Fiberglass Reinforced Resin	
Liner		Nexus Veil Interior Liner	

3.5.8 Coagulant Aid Polymer Chemical Feed System

Table 3-27: Polymer Pumps Design Criteria			
Parameter	**Units**	**Value**	**Reference**
Pump:			
Number	units	2	Inland Empire Utilities F107595 O&M-w-comments.pdf
Type		Milton Roy LMI diaphragm pump	
Model		B931-76R	
Serial Number		0507970316-1	
Motor Voltage/Amps	V/A	120/1.5	
Pumping Flow	gph	0 - 4.5	
Maximum Pressure	psig	50	
Dilution System:			
Number	units	2	
Type		Fluid Dynamics Dynablend	
Controller		Level 4	

3.6 WATER QUALITY

The water quality sampling requirements for the primary treatment system are identified in **Table 3-28** for maintaining unit process performance.

Table 3-28: Primary Treatment Water Quality Sampling : Process

Sample Location	Type of Sample, & Frequency	Analysis	Purpose
Primary Effluent	24 hr, composite sampled Monday, Wednesday and Friday	TOC	This analysis is used to check compliance with the KPI for TOC (BOD_5) removal in the primary clarifiers.
Primary Effluent		TSS	This analysis is used to check compliance with the KPI for solids removal in the primary clarifiers.
Primary Effluent		Ortho-phosphate	Phosphorus is chemically removed in the primary clarifiers. This analysis checks that the dose rate of ferric chloride is correct.
Primary Effluent		Ammonia	Ammonia is biologically removed in the secondary treatment system. This analysis determines the load on the secondary treatment system.
Primary Sludge	Grab Sample, sampled once a week	Total Solids %	This parameter is used for determining the efficiency of settling in the primary clarifier.

No sampling is required at the primary treatment systems for NPDES compliance, South Coast Air Quality Management District compliance or SARI compliance.

3.7 MECHANICAL TROUBLESHOOTING

3.7.1 Primary Influent Splitter Troubleshooting

3.7.1.1 Flygt Submersible Primary Influent Splitter Mixer

Troubleshooting is performed with the power supply disconnected and LOTO, except for those checks which cannot be performed without voltage. Always ensure that there is no one near the mixer when the power supply is turned on.

If the Mixer Fails to Start

Follow these steps to troubleshoot the mixer when it fails to start.

No	Question	No	Yes
1	Is an alarm signal indicated on the control panel?	Check question No 2.	• Check that the overload protection is reset. • Check the thermal switches. If the thermal switches are out of order, contact an ITT Flygt service shop.
2	Can the mixer be started manually?	Check question No 3.	• Check that all connections are intact. • Check relay and contactor coils. • Check that the control switch (Man/Auto) makes contact in both positions.
3	Is the installation receiving voltage?	Check that • the main power switch is on. • there is control voltage to the start equipment and its fuses are intact. • there is voltage in each phase of the supply line. • all fuses have continuity and are tight. • the overload protection is reset. • the motor cable is not damaged.	Check question No 4
4	Is the propeller stuck? **WARNING!** Disconnect power before checking the propeller.	Check question No 5	• Check that the propeller rotates easily by hand. • Clean the propeller.
5	Does the fault still exist?		Contact an ITT Flygt service shop.

Figure 3-18: Flygt Mixer Troubleshooting Guide – Mixer Fails to Start

If the Mixer Starts but Motor Protection Trips

Follow these steps to trouble shoot the mixer when the mixer starts but the motor protection trips.

No	Question	No	Yes
1	Is the motor protection set too low?	Check question No 2.	Set the motor protection according to the data plate.
2	Is the propeller difficult to rotate by hand? WARNING: disconnect power before checking the propeller!	Check question No 3	• Clean the propeller. • Check that the propeller size is correct. If none of these actions helps, contact an ITT Flygt service shop.
3	Is the installation receiving full voltage on all three phases?	• Check the motor fuses. • Notify an authorized electrician.	Check question No 4.
4	Have all the phase currents the same value or are they too high?	Check question No 5.	Contact an ITT Flygt service shop.
5	Is the rated speed in accordance with the data plate?	Check question No 6.	Contact an ITT Flygt service shop.
6	Is the density of the liquid too high?	Check question No 7.	• Dilute the liquid. • Change the propeller blades or to a more suitable mixer. • Contact an ITT Flygt service shop.
7	Fault on the overload protection?	Check question No 8.	Replace the overload protection.
8	Does the fault still exist?	-	Contact an ITT Flygt service shop.

Figure 3-19: Flygt Mixer Troubleshooting Guide – Mixer Starts but Trips

If the Mixer Starts, Stops and Starts in a Rapid Sequence

If the contactor's selfholding function break, check
- the contactor connections.
- the voltage in the control circuit in relation to the rated voltage on the coil.

If the contactor's selfholding function is ok and the fault still exist, contact an ITT Flygt service shop.

WARNING!!

Do not override the motor protection repeatedly if it has tripped!

Figure 3-20: Flygt Mixer Troubleshooting Guide – Mixer Stops and Starts

3.7.2 Primary Clarifier System Troubleshooting

3.7.2.1 WesTech Primary Clarifier Drive Unit

Troubleshooting is performed with the power supply disconnected and LOTO, except for those checks which cannot be performed without voltage. Always ensure that there is no one near the clarifier drive when the power supply is turned on.

DRIVE UNIT TROUBLESHOOTING

Read and understand the 'Maintenance and Operation Warning' in the 'GENERAL' section of this manual, before doing any troubleshooting or inspections. There are many hazardous conditions around a drive such as electric shock, risks related to rotating equipment, etc.

Problem	Possible Causes	Corrective Actions
Motor not Rotating	(1) Terminal wires are loose or not wired correctly. (2) Fuses have been blown. (3) Circuit breakers have tripped. (4) Burnt out windings due to overload, impaired ventilation, and incorrect power supply. (5) Excessive cold temperatures causing lubricants to flow less easily.	(1) Check connections and wire these correctly. (2) Correct cause of overload, replace fuses. (3) Reset and check running amps. (4) Check all that apply, remove cause then replace motor. (5) Provide temporary heat. Change to lower viscosity lubricants, or make sure to run continuously.
Motor Overheating	(1) Motor is overloaded. (2) Motor operating on wrong voltage.	(1) Remove overload condition. (2) Check supply voltage and connect correct motor wiring.
Motor Operating with Excessive Noise	(1) Coupling misaligned. (2) Coupling halves too close. (3) Worn out bearings. (4) Broken fan. (5) Bent fan cover. (6) Loose fasteners.	(1) Align coupling. (2) Correct gap per specifications. (3) Replace worn out bearings. (4) Replace fan. (5) Repair or replace fan cover. (6) Tighten fasteners.

Drive Unit Troubleshooting (continued)

Problem	Possible Causes	Corrective Actions
Mechanism not Turning	(1) Shear pin broken (if provided). (2) Coupling between motor and reducer broken. (3) Sheared or slipped key between drive train components.	(1) Replace broken shear pin. (2) Replace broken couplings. (3) Replace sheared key between drive train components.
Torque Control Device not Operating Correctly **Before attempting any work on torque box, contact WesTech for assistance.** *Unauthorized adjustment of the torque control device will void the warranty.	(1) Incorrect wiring. (2) Check for unauthorized adjustment of the cams. (3) Check for bent, broken, or bound-up parts. (4) Zeroing screw not set properly.	(1) Correct the wiring. (2) Contact WesTech for assistance. (3) Replace the bent and broken parts. (4) Set zeroing screw properly.
Torque Control Device Shows High Torque	(1) Rakes stuck in excessive sludge. (2) Rake interference due to a foreign object. (3) Plugged underflow. (4) Thickener/Clarifier operational problems. (5) Bound up pinion shaft bearings due to presence of frozen condensate or corrosion. (6) Torque control device camshaft is bound up.	(1) Remove accumulated solids. (2) Correct the cause of rake interference. (3) Unplug underflow. (4) Correct the operational problems. (5) Provide temporary heat to drive unit or replace corroded parts. (6) Remove torque control device cover and apply lubricant to camshaft.

Drive Unit Troubleshooting (continued)

Problem	Possible Cause	Corrective Actions
Reducer or Drive Running with Excessive Noise and Vibrations	(1) Lack of lubrication. (2) Loose fasteners. (3) Loose coupling.	(1) Check and add grease/oil as required. (See Lubrication Tags) (2) Tighten fasteners. (3) Tighten coupling.
Reducer Overheating**	(1) Reducer is overloaded. (2) Incorrect lubricant or quantity of lubricant.	(1) Remove overload condition. (2) Refer to manufacturer's lubrication instructions.
Lubricant Leakage from Reducer	(1) Seal or shaft worn out. (2) Excessive lubricant. (3) Water contamination. (4) Reducer fasteners are loose.	(1) Repair or replace seal and shaft. (2) Reduce frequency of re-lubrication. (3) Find water contamination source and correct it. (4) Tighten fasteners.
Main Gear/Main Bearing Making Noise	(1) Lack of lubricant. (2) Condensate water in gear/bearing cavity.	(1) Check gear teeth and add grease/oil as required. (See Lubrication Tags) (2) Drain condensate water.
Discolored Oil in Sight Glass (Milky, Dark Brown or Black)	(1) Condensate mixing with oil. (2) Oil dissolving grease. (3) Wash down water entering the main bearing. (4) Oxidation of the oil.	(1) Drain condensate Weekly or as site conditions require. (2) Add 14 oz grease to main bearing during one rotation. (3) Do not wash the top of the main gear/bearing. (4) Change the oil. **Note:** If discolored, drain and replace all oil plus add fresh grease (see Lubrication Tags).

Figure 3-21: Westech Primary Clarifier Drive Troubleshooting Guide

This troubleshooting guide is to help you identify and overcome common problems of reducers. If you have a problem not listed below, please consult factory.

PROBLEM WITH THE REDUCER		POSSIBLE CAUSES	SUGGESTED REMEDY
Runs Hot	Overloading	Load exceeds the capacity of the reducer.	Check rated capacity of reducer, replace with unit of sufficient capacity or reduce load.
	Improper Lubrication	Insufficient lubrication.	Check lubricant level and adjust up to recommended levels.
		Excessive lubrication.	Check lubricant level and adjust down to recommended level.
		Wrong lubricant.	Flush out and refill with correct lubricant as recommended.
Runs Noisy	Loose Foundation Bolts	Weak mounting structure.	Inspect mounting of reducer. Tighten loose bolts and/or reinforce mounting and structure.
		Loose hold down bolts.	Tighten bolts.
	Worn Disc	Overloading unit may result in damage to disc.	Disassemble and replace disc. Recheck rated capacity of reducer.
	Failure of Bearings	May be due to lack of lubricant.	Replace bearing. Clean and flush reducer and fill with recommended lubricant.
		Overload.	Check rated capacity of reducer, replace with unit of sufficient capacity or reduce load.
	Insufficient Lubricant	Level of lubricant in the reducer not properly maintained.	Check lubricant level and adjust to factory-recommended level.
	Damaged Pins & Rollers	Overloading of reducer.	Disassemble and replace ring gear pins and rollers. Check load on reducer.
Output Shaft Does Not Turn	Input Shaft Broken	Overloading of reducer can cause damage.	Replace broken shaft. Check rated capacity of reducer.
		Key missing or sheared off on input shaft.	Replace key.
	Eccentric Bearing Broken	Lack of lubricant.	Replace eccentric bearing. Flush and refill with recommended lubricant.
		Coupling loose or disconnected.	Properly align reducer and coupling. Tighten coupling.
Oil Leakage	Worn Seals	Caused by dirt or grit entering seal.	Replace seals. Breather filter may be clogged. Replace or clean filter.
		Overfilled reducer.	Check lubricant level and adjust to recommended level.
		Vent clogged.	Clean or replace element, being sure to prevent any dirt from falling into the reducer.
		Improper mounting position, such as wall or ceiling mount of horizontal reducer.	Mount horizontally or rework reducer to wall or ceiling mount.

Figure 3-22: Westech Primary Clarifier Speed Reducer Troubleshooting Guide

3.7.2.2 Primary Sludge and Primary Scum: Dezurik Plug Valves

Symptom	Possible Cause	Corrective Action
Packing Leaks.	Packing is loose.	Adjust Packing. (See *"Packing Adjustment"* section)
	Packing is worn.	Replace Packing. (See *"Packing Replacement"* section)
Valve does not close.	Object is wedged between plug and seat.	Open the valve completely to flush object. If this doesn't work, remove valve from the pipeline. (See *"Removing Valve from Pipeline"* section)
	Actuator closed position is out of adjustment.	Adjust the closed position stop as described in the Actuator instructions.
Valve leaks when closed.	Plug is worn or damaged.	Replace plug. (See *"Disassembly"* section)
	Rubber on plug is torn.	

Figure 3-23: Dezurik Plug Valve Troubleshooting Guide

Troubleshooting of actuators is generally not necessary and should not be performed by Operators. If needed, request assistance from the Instrumentation and Control Department.

Table 3-29: AUMA Actuator Troubleshooting

Item #	Description	Remedial Measures
1	Reset Limit Switch	Sludge & Scum Valves O&M.pdf– pages 112 to 113
2	Reset torque	Sludge & Scum Valves O&M.pdf– pages 114

3.7.2.3 Primary Sludge Flow Meter

Check the display	
No display visible and no output signals present.	1. Check the supply voltage → terminals 1, 2 2. Check the power line fuse → 78 85 to 250 V AC: TR5 1 A slow-blow / 250 V 11 to 40 V DC / 20 to 28 V AC: TR5 1.6A slow-blow / 250 V 3. Measuring electronics defective → order spare parts → 67
No display visible, but output signals are present.	1. Check whether the ribbon-cable connector of the display module is correctly plugged into the amplifier board → 76 2. Display module defective → order spare parts → 67 3. Measuring electronics defective → order spare parts → 67
Display texts are in a foreign language.	Switch off power supply. Press and hold down both the ⊡ buttons and switch on the measuring device. The display text will appear in English (default) and is displayed at maximum contrast.
Measured value indicated, but no signal at the current or pulse output.	Electronics board defective → order spare parts → 67
↓	
Error messages on display	
Errors which occur during commissioning or measuring operation are displayed immediately. Error messages consist of a variety of icons: the meanings of these icons are as follows (example): – Error type: **S** = system error, **P** = process error – Error message type: ϟ = fault message, **!** = notice message – **EMPTY PIPE** = Type of error, e.g. measuring tube is only partly filled or completely empty – **03:00:05** = duration of error occurrence (in hours, minutes and seconds) – #401 = error number Caution! ▪ See the information on → 55! ▪ The measuring system interprets simulations and positive zero return as system errors, but displays them as notice message only.	
Error number: No. 001 – 399 No. 501 – 699	System error (device error) has occurred → 71
Error number: No. 401 - 499	Process error (application error) has occurred → 73
↓	
Other error (without error message)	
Some other error has occurred.	Diagnosis and rectification → 73

Figure 3-24: Endress and Hauser Flow Meter Troubleshooting Chart

3.7.2.4 Primary Scum Level Sensor

The analysis and troubleshooting of communication failure of the level sensor/ transmitter is accomplished through the use of the following flowcharts. See Differential Pressure Transmitter_Section 13563.pdf.

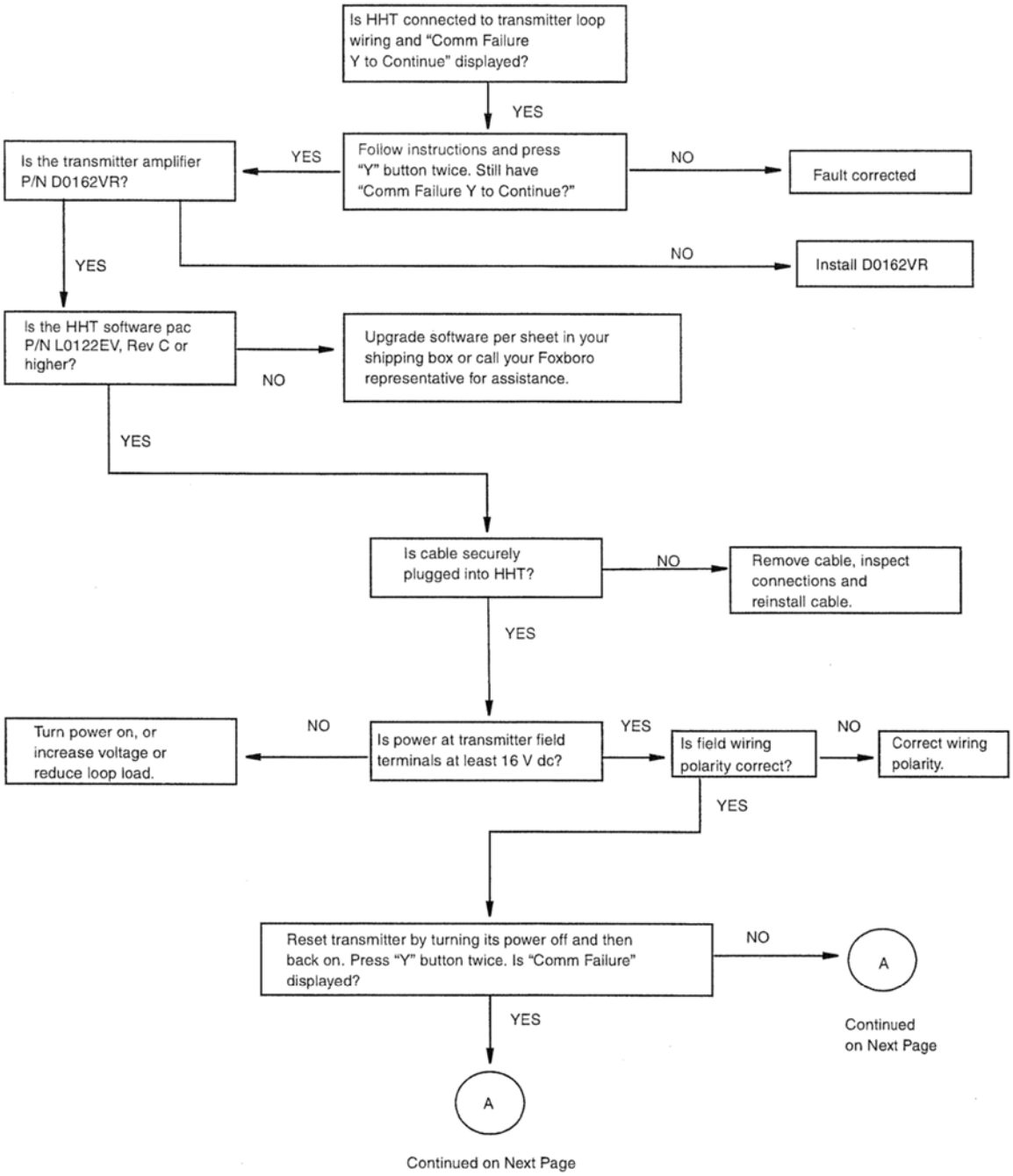

Figure 43. Communication Failure Flowchart

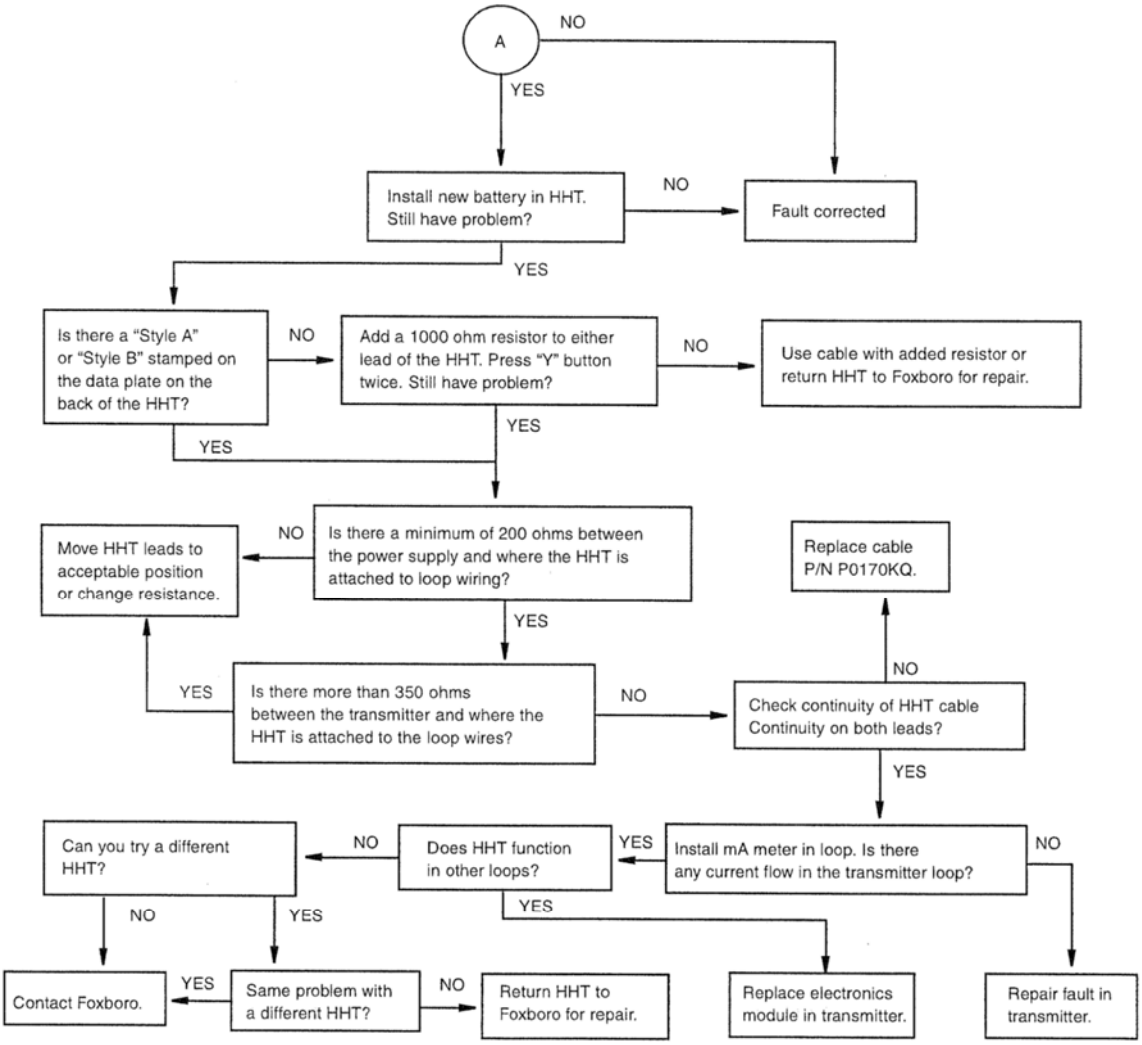

NOTE: For purposes of this figure, HHT also symbolizes the PC-Based Configurator.

Figure 44. Communication Failure Flowchart (Continued)

Figure 3-25: Foxcom IDP-10D Troubleshooting Charts

3.7.3 Chemical Feed System Troubleshooting

3.7.3.1 Ferric Chloride Chemical Feed Pump

Your DLCM contains extensive diagnostics that allow it to determine the source of common problems. your DLCM is not operating properly, your first course of action should be to review the {DIAGNOSTICS} sub-menu. To access this menu from the standard operating mode follow this procedure (provided your user interface – keypad and display – is functioning):

1. Press [MOTOR] repeatedly until the display reads {MOTOR OFF}.
2. Cycle power to the DLCM (turn the main OFF then ON). This will cause the self-test routine to r execute.
3. Press [MENU]. The screen {–MENU– / DIAGNOSTICS-1} is displayed. The value, in this case '1' indicates how many failures were detected.
4. Press [ENTER] to enter the Diagnostics Menu. The screen {DIAG MENU 1/11 / POWER IN: OK} is displayed.
5. Repeatedly press [UP] to cycle through all nine Diagnostic screens.
6. If a screen displays a FAIL message, press [ENTER] to display the time and date the failure occurred. Press [ENTER] again to display the clear screen. Press [UP] and then [ENTER] to clea the message. (This paragraph does not apply should you encounter a Battery Fail or Circuit Fail situation).

Make a note of any failures reported in the Diagnostics Menu. Using this information, proceed with the troubleshooting instructions below:

NOTE **Other actions may be necessary to bring the process back to normal conditions before clearing a failure.**

MENU (DIAGNOSTICS)		
Symptom	**Probable Cause**	**Possible Solution**
DIAG 1/11 POWER IN: FAIL	The power to the DLCM failed while the pump motor was running.	Place DLCM in {MOTOR OFF} operating mode before disconnecting power. Refer to ***POWER trouble shooting***.
DIAG 2/11 ANALOG IN: FAIL	The Analog Input signal fell under the calibrated range, or fell to 0 within 0.25 seconds (i.e., the signal was changing by more than 8.8mA per second and was less than 0.3mA).	Place DLCM in {MANUAL MODE} or OFF before the signal loss occurs. Re-calibrate Analog Input. Condition Analog Input Signal. Refer to ***ANALOG INPUT trouble shooting***.
DIAG 3/11 MODBUS FAIL	A properly formatted and addressed MODBUS message was not received in the allotted time.	Increase the Response Time setting.
DIAG 4/11 LEAK DET: FAIL	The Leak Detection Switch closure activated according to its configuration.	Review ***Section 7-General Operation: Leak Detection Failure Set-up***. Refer to ***LEAK DETECTION trouble shooting***.
DIAG 5/11 LEVEL INPUT: FAIL	The Level Input Switch closure activated according to its configuration.	Review ***Section 7-General Operation: Level Input Failure Set-up***. Refer to ***LEVEL INPUT trouble shooting***.
DIAG 6/11 MOTOR TEMP	The motor exceeded its maximum internal temperature.	Relocate to a cooler area. Increase minimum motor speed setting.

Figure 3-26: Ferric Chloride Pumps Troubleshooting Guide – Page 94

3.7.3.2 Polymer Chemical Feed System

3.4 TROUBLESHOOTING CHART

PROBLEM	CAUSE	SOLUTION
Dilution water solenoid valve not closing	Contaminants stuck in valve/pilot seat	Disassemble, clean and re-install solenoid valve
Dilution water solenoid valve not opening	Faulty control circuit	Check voltage to solenoid
	Burned-out coil	Check coil continuity; replace coil if bad
	Low voltage supply	Voltage must be at least 85% of nameplate rating
Polymer pump loses prime	Air leak in inlet piping	Tighten all polymer supply fittings
	Suction lift too high	Raise polymer drum above pump inlet fitting
	Foot valve in suction tubing stuck	Remove, clean and **dry** foot valve.
	Inlet or outlet fittings in pump head are too tight	Carefully hand-tighten fittings until snug.
	Check valves in pump head are not sealing	Remove, clean and **dry** pump head and check valves
	Stroke length is set too low	Increase stroke length to 30% (decrease speed to maintain same output)
Blender producing unblended polymer	Low differential pressure	Check for proper differential pressure (50 psi rec.)
	Solution concentration too high	Consult polymer manufacturer for optimal solution concentration (0.1% to 0.5% is normal)
Polymer check valve leaking	Valve plugged with polymer	See check valve cleaning instructions
		Check polymer supply for lumps - install strainer between pump and check valve
Polymer pump not pumping See also - Polymer pump loses prime (above)	Pressure switch (OPTIONAL) detects low pressure and disables pump	Check water pressure. Recalibrate pressure switch to shut off pump at lower pressure
	Polymer check valve plugged	Remove, clean and reinstall check valve
	Pump discharge check valve failure	Disassemble and clean pump check valve
System will not run	Fuse blown	Replace fuse (see Electrical Diagram for sizing)
		Check system current draw - it should not be more than 50% above the polymer pump motor nameplate current rating
	Dilution water differential pressure is low (<40 psid) (Systems with optional pressure switch only)	Check for closed valve, etc. in water supply and solution outlet piping; increase water inlet pressure

Figure 3-27: Polymer System Troubleshooting Guide – Page 43

3.8 SAFETY

3.8.1 Safety Manual

IEUA has standard safety protocols that must be followed by all employees, sub-contractors and visitors at RP-4. These protocols and procedures are addressed in the Safety Manual and Confined Space Access procedures presented below. All Operators must be very familiar with the **INLAND EMPIRE UTILITIES AGENCY SAFETY MANUAL.**

The Safety Manual is designed to provide employees of the Inland Empire Utilities Agency with written guidelines to cover safety, health, and environmental processes. Every possible circumstance or situation cannot be anticipated; therefore, if situations develop which are not covered in this manual, employees should exercise sound judgment in determining the safest actions to follow. Exercising sound thought processes, drawing upon professional work experience, and keeping safety consciousness at the forefront is always be needed, even with a detailed procedure or policy in place.

3.8.2 Confined Space

The following areas have been identified as Confined Space Access in the preliminary treatment area.

Table 3-30: Confined Space Evaluations in Primary Treatment Area

Program	Confined Space Evaluation Form	Document
Primary Influent Splitter Box	R4-XX	
Primary Clarifier 1 & 2	R4-XX	
Primary Scum Wet-well	R4-XX	
Primary Scum Valve Vault	R4-XX	

Figure 3-28: Primary Influent Splitter Box Hatch

Figure 3-29: Primary Scum Wet-Well

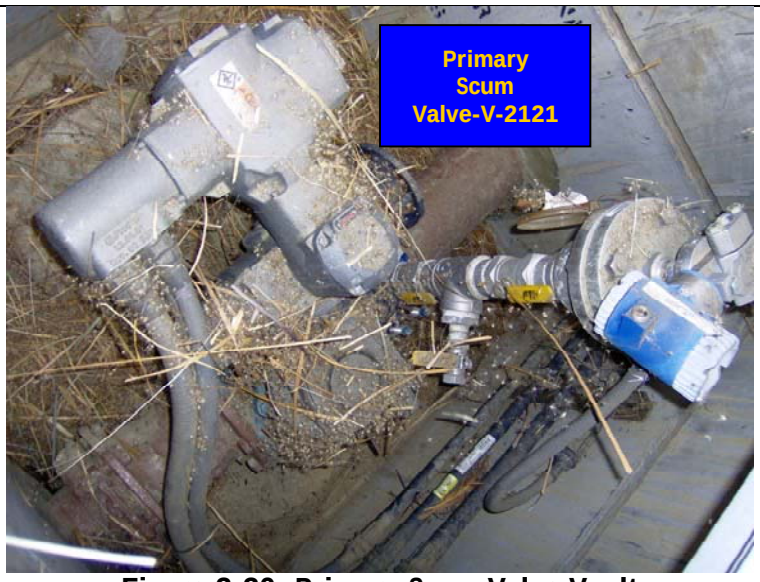

Figure 3-30: Primary Scum Valve Vault

3.8.3 Specific Hazards – Primary Treatment Hazardous Headspace

The primary clarifiers and scum wet-well has the potential to develop a hazardous atmosphere. This could be as a result of explosive gas buildup in the sewer channels or illegal discharge of flammable hydrocarbons that float on the surface of quiescent tanks. The primary clarifiers have LEL probes located in the head space of each clarifier and in the scum wet well (LEL-2100 A, B, C). If the hazardous gas alarm sounds DO NOT climb the stairs to the roof of the primary clarifiers, DO NOT open the scum wet-well hatch. In addition an audio/visual alarm unit Go/No-Go entry beacon is provided outside the screening and compactor building.

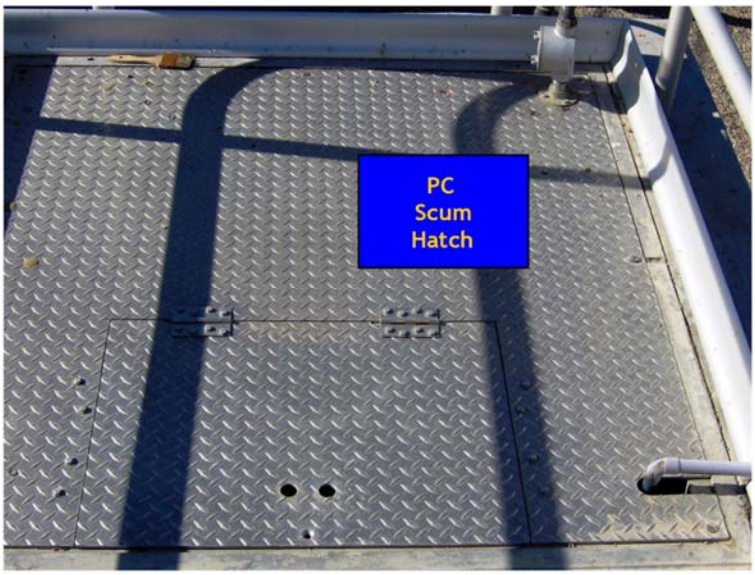

Figure 3-31: Primary Scum Hatch

The local alarm indication and RESET button is located on the West side of Primary Clarifier No.1.

Table 3-31: LEL Gas Detector Design Criteria			
Parameter	**Units**	**Value**	**Reference**
Detector		LEL2100 A,B,C	
Number	#	3	
Style		4800A NIC II LEL Transmitter	Scott LEL Detector.pdf
Model		Scott Instruments	
Sensor Type		Catalytic Platinum bead	
Housing		Explosion proof aluminum Class I Div 1, Groups B,C,D	
Accuracy		0.1% of full scale	

Table 3-32: LEL Receiver and Controller Design Criteria			
Parameter	**Units**	**Value**	**Reference**
Detector		AIT1100	
Number	#	1	
Style		Quadscan II	Scott Quad Scan.pdf
Model		Scott Instruments 7400	
Type		4 channel monitor	
Enclosure		NEMA 4X	
Accuracy		2% of full scale	

Figure 3-32: Local Display and Reset for H_2S Monitor in Primary Clarifier Area

3.8.4 Specific Hazards – Primary Treatment Mechanical Equipment

The RP-4 primary clarifier tanks are equipped with mechanically driven scrapers that continually move the collected sludge towards a hopper in the base of the tank from where it is drained by gravity to RP-1 for further treatment and stabilization. Grease and oil from the floating material is also drained by gravity to RP-1 for further treatment. Operators must always be aware of the dangers surrounding mechanical equipment operation.

3.8.5 Specific Hazards – Primary Treatment Chemicals

Two chemicals are typically used in the primary treatment area of RP-4: ferric chloride and polymer. Ferric chloride is significantly more hazardous as it is a highly corrosive chemical. Refer to the Material Safety Data Sheet (MSDS) for safety considerations before working around Ferric Chloride.
In particular:

- Observe all specific site and safe work procedures.
- Observe normal occupational health and safety procedures.
- Be aware of working around Ferric Chloride storage and pumping facilities.
- Wear Personal Protective Equipment (PPE) when likely to be in close proximity to $FeCl_3$:
    - Close fitting goggles or full face shield
    - Rubber Gloves
    - Chemical Resident Suit
    - Rubber Boots
    - Properly fitted SCBA if Threshold Limit Value (TLV) is exceeded (30mg/kg)

Polymer is less hazardous but the following recommendations must be followed when working with this product:

- Gloves, aprons, and safety glasses are recommended when working with this product. Some polymers can cause skin irritation.
- Avoid contact with organic materials, concentrated acids, and highly alkaline materials. These materials may cause the polymer to react in unexpected ways that could result in a fire or a congealed mass that cannot be fed to the process.
- Polymer is extremely slippery. If material is spilled on the floor it should be wiped up with a dry rag immediately. After wiping up, the floor needs to be cleaned so that if the floor gets wet in the future, it will not be slippery. Scrubbing the floor with a

deck brush and an abrasive bleach cleanser such as Comet, or sodium hypochlorite may neutralize the polymer.

3.8.5.1 Safety Showers near Primary Treatment Chemicals

There are 4 safety showers in the ferric chloride and polymer storage and dosing area. All operators must:

- ☐ Become familiar with the location and operation of the nearest emergency eyewash and safety shower equipment.
- ☐ Use emergency eyewash and safety shower equipment as trained.
- ☐ Report incidents that require the use of emergency eyewash and safety shower equipment to supervisory personnel at once.

If showers or eye wash stations are used, then the following guidelines should aid in minimizing injury due to contact with hazardous materials:

- ☐ Flush eyes and/or skin with water for at least 15 minutes.
- ☐ Immediately remove contaminated clothing. Do this while under the shower when severe contamination has occurred. Have someone assist with clothing removal when possible (An assistant may use a fire blanket or uncontaminated article of clothing as a shield to provide privacy for someone who needs to remove their clothes while under an emergency shower, and for body coverage while seeking medical attention).

Figure 3-33: Ferric Chloride Dosing Safety Shower

Figure 3-34: Ferric Chloride Tank Fill Safety Shower

Figure 3-35: Ferric Chloride Tank Safety Shower

Figure 3-36: Polymer Dosing Safety Shower

Inland Empire Utilities Agency
A MUNICIPAL WATER DISTRICT

GA.5. IEUA AutoCAD Standards and CAD Manual

GA.5. IEUA AutoCAD Standards and CAD Manual

Inland Empire Utilities Agency

A MUNICIPAL WATER DISTRICT

IEUA CAD MANUAL

Revised date: December 2023

Version 2.2

Approval:

Manager of Engineering
Jason Marseilles

This Guidelines document is an integral part of the IEUA ENGINEERING STANDARDS.

Table of Contents

1.0 INTRODUCTION

2.0 OVERVIEW

3.0 FILE ORGANIZATION TECHNIQUES

4.0 DIRECTORY ORGANIZATION

5.0 FILE NAMING CONVENTION

6.0 LAYER CONVENTIONS

7.0 GRAPHIC/FILE STANDARDS

8.0 DRAWING SET ORGANZATION

9.0 DELIVERABLES AND DATA EXCHANGE

10.0 CAD STANDARD IMPLEMENTATION TOOLS

11.0 INSTRUMENTATION AND CONTROL

12.0 SAMPLE DRAWINGS

13.0 ADDENDUM, CONFORMED, RECORD, AND AS-BUILT DRAWINGS

INTRODUCTION

TABLE OF CONTENTS PAGE

OBJECTIVE 2

SCOPE 2

RESPONSIBLE ORGANIZATION 2

REVISED OR ADDED UPDATE PROCEDURE OF CAD MANUAL 3

OBJECTIVE

This manual describes the application of Computer Aided Design (CAD) standards and procedures at Inland Empire Utilities Agency (IEUA). This manual is part of an initiative to consolidate existing CAD drafting standards and to develop data standards that address the entire life cycle of facilities within the IEUA service area.

This manual assumes CAD fluency by the user. This manual is not intended to substitute for specific training in the use of CAD or related software packages.

SCOPE

The IEUA CAD Manual is intended to provide IEUA Staff and consultants with information normally required to process drawings “from cradle to grave” through design, revisions and reproducing methods necessary to communicate “on time”, clear, concise, consistent and complete information.

IEUA staff and consultants shall follow the procedures and methods defined in this manual for all projects.

It's the IEUA's intent to NOT allow deviations from the standard requirements specified and /or referenced in this Manual. However, should IEUA staff identify a project-specific deviation that appears unavoidable; the deviation request must be submitted to IEUA Engineering Division for approval. Until the approval procedure is detailed in the IEUA Engineering Policies and Procedures Manual, the requests must be submitted according to the procedure listed below.

RESPONSIBLE ORGANIZATION

The Engineering Department is responsible for the updating and maintaining of the IEUA CAD Manual. This standard is intended to be neither static nor all-inclusive and thus will be updated and enhanced as appropriate. To propose changes to this manual, submit a request in memorandum form to the IEUA Project Manager and the Engineering Department. Requests for modifications shall document (1) why the current procedure and/or standards are inapplicable or ineffective; (2) what the proposed deviation or change should be and; (3) how would it improve the CAD standards or procedures and the overall productivity. The Engineer Department and IEUA Staff will review these requests for possible inclusion in the manual.

“When we can no longer change a situation, we are challenged to change ourselves.”

Viktor Frankl

REVISED OR ADDED UPDATE PROCEDURE OF CAD MANUAL:

For Revised or Added Pages

Page indicated been revised with new dated December 2023:

Next to Page Number:

Designated with letter R

Page newly added designated with letter N

IEUA CAD MANUAL 1 R N December 2023

Note: any revisions and additional pages made to the CAD Manual shall be finalized and distributed in hard copy to the Engineering Department and IEUA Staff for update.

OVERVIEW

TABLE OF CONTENTS PAGE

SERVICE AREA 5
COMPUTER AIDED DESIGN SYSTEMS 6
CAD 6
GIS 6

This chapter provides an overview of IEUA's Service Area and Computer Aided Design system.

SERVICE AREA

The Inland Empire Utilities Agency is a regional sewage treatment and water agency that provides sewage treatment, solids waste handling, and recycled water to the west end of San Bernardino County. Its 242 square mile service area includes the cities of Upland, Montclair, Ontario, Fontana, Chino, Chino Hills; Cucamonga County Water District which services the City of Rancho Cucamonga; State of California correctional facilities; and the unincorporated areas of San Bernardino County, including the Chino Agricultural Preserve. Five regional water reclamation plants are used to treat sewage from the Agency's service area. They are: Regional Plant No. 1 (RP-1), located in the City of Ontario; Regional Plant No. 2 (RP-2), located in the City of Chino; Regional Plant No. 4 (RP-4), located in the City of Rancho Cucamonga; Carbon Canyon Water Reclamation Facility (CCWRF), located in the City of Chino and Regional Plant No. 5 (RP-5) Phase I, located in the City of Chino.

The Agency has two main service areas: Northern Service Area and Southern Service Area. The northern part of Riverside Drive in Ontario is referred to as the Northern Service Area and the southern part of Riverside Drive is the Southern Service area. The Northern Service area is approximately 162 square miles and it has two active treatment plants, RP-1 and RP-4, and one decommissioned treatment plant, RP-3.

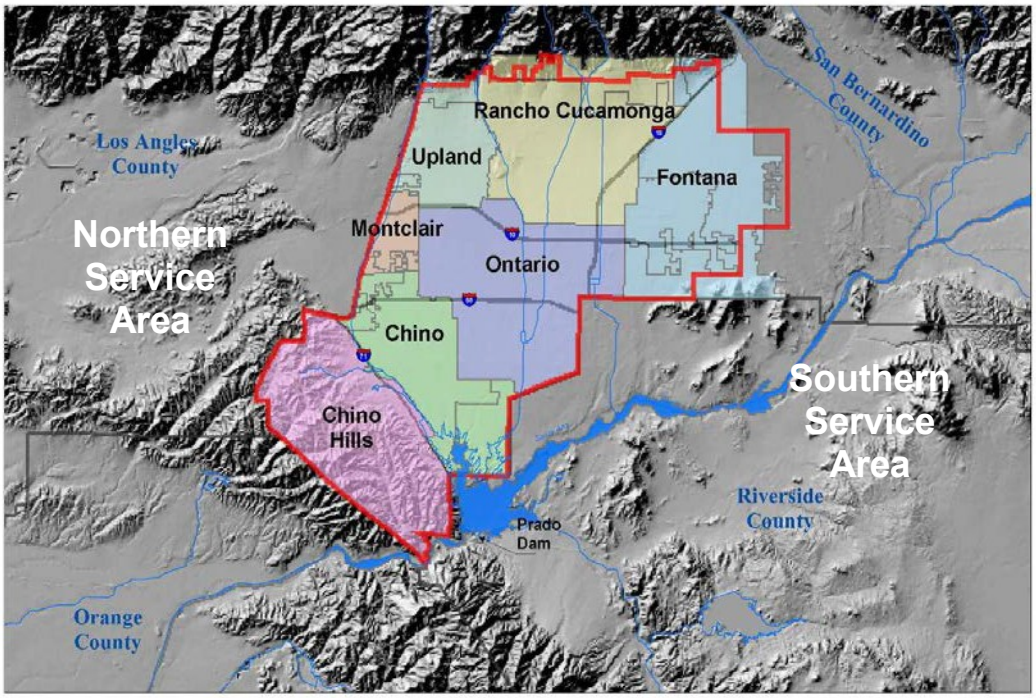

COMPUTER AIDED DESIGN SYSTEMS

CAD

The CAD system at IEUA is designed to provide the greatest capabilities for all IEUA staff and consultants. The unified approach to the CAD system and CAD procedures is intended to promote coordination between different disciplines and outside consultants. This is to allow the creation of a uniformly high-quality design product and to minimize the time spent on CAD tasks.

The following are the Computer Aided Design and Drafting (CADD) Specifications for Inland Empire Utilities Agency (IEUA). The Engineering Department of IEUA currently utilizes AutoCAD Civil 3D 2022 (or higher). **All** construction documents submitted to IEUA shall be in AutoCAD 2018 and "DWG" format and PDF Files.

GIS

The Geographic Information System (GIS) at IEUA is based in the ESRI product line, including ArcGIS Desktop (ArcView and ArcInfo) and ArcIMS, all in version 9.1 or later. Unless otherwise noted in the project scope of work, GIS deliverables alone will not be accepted. All design work must be performed using the CAD applications as designated in 2022 CAD or higher.

FILE ORGANIZATION TECHNIQUES

TABLE OF CONTENTS PAGE

INTRODUCTION 8
THE FACILITY MODEL 9
SOP UPDATED FACILITY MODEL FILE FROM THE VAULT 10
EXISTING RP-1 FACILITY MODEL 11
REFERENCE FILES 12
REFERENCE FILE ATTACHMENTS (AUTOCAD) 12
REFERENCE FILE PATHS (AUTOCAD) 13
SEPARATION OF INFORMATION 13
MEASUREMENT UNITS AND COORDINATES 13
ROTATION 14

INTRODUCTION

This chapter details the strategies for the organization of CAD files to support the various stages of a facility cycle or on any given project. The procedures described here are used extensively in the design industry to gain the greatest productivity from CAD.

THE FACILITY MODEL

IEUA treatment facilities were built over the past 50 years, with over 10,000 engineering drawings. As each project is constructed the resulting modifications or enhancements become part of the Facility Model. A Facility Model is all information created relating to a particular facility such as RP-1, RP-2, RP-3, RP-4, RP-5, and Carbon Canyon WRF, Desalter, Pump and Lift Stations, IERCF, and HQ. IEUA utilizes the Facility Model concept to assist in Design, Construction, Operations and Maintenance activities.

Figure 0-1, describes a simplified view of the project to facility model cycle. Project one results in an addition to the facility. The project drawings are archived and the facility model(s) are updated to reflect the new construction. Project two will then utilize the revised facility model(s) as the baseline to begin the new design and thus repeat the process. Often, information in one project is the basis for developing new information for the next project. Therefore, it is critical that this information is accurate, and organized in a way that facilitates easy retrieval and reuse. Consultant must obtain the Facilities Model Base Maps from the Agency' Project Manager and/or CAD Designer.

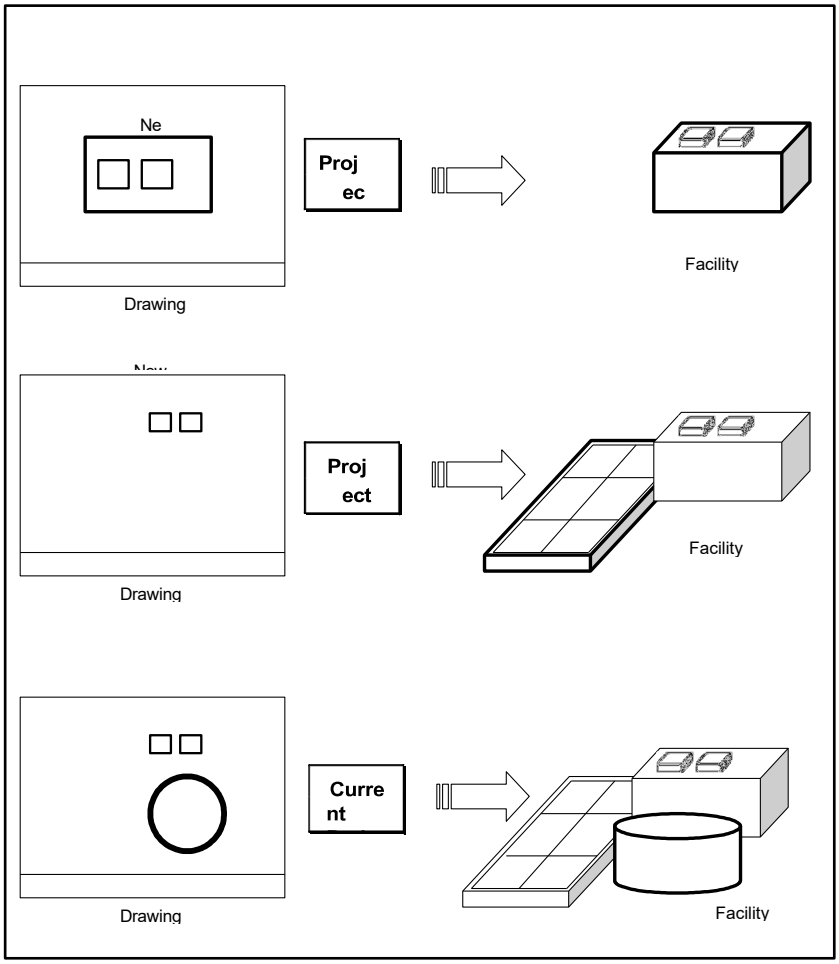

Figure 0-1

SOP UPDATE FACILITY MODEL FILE FROM THE VAULT

Figure 0-2, to support the Facility Model concept, information is organized into one Facility Model.

IEUA edits to the Facility Model File shall be after project As-built. Model located in IEUA Vault (For internal use, the model is located \\hqafs03\AutoCAD\1-PLANT MAPS\All Facilities\Master Facilities\Facilities Master Base Files).

Demolished can be moved to a demolition layer but they cannot be deleted. Items determined to be incorrect can be moved to a non-plotting layer and the corrected element is added to the Facility Model File.

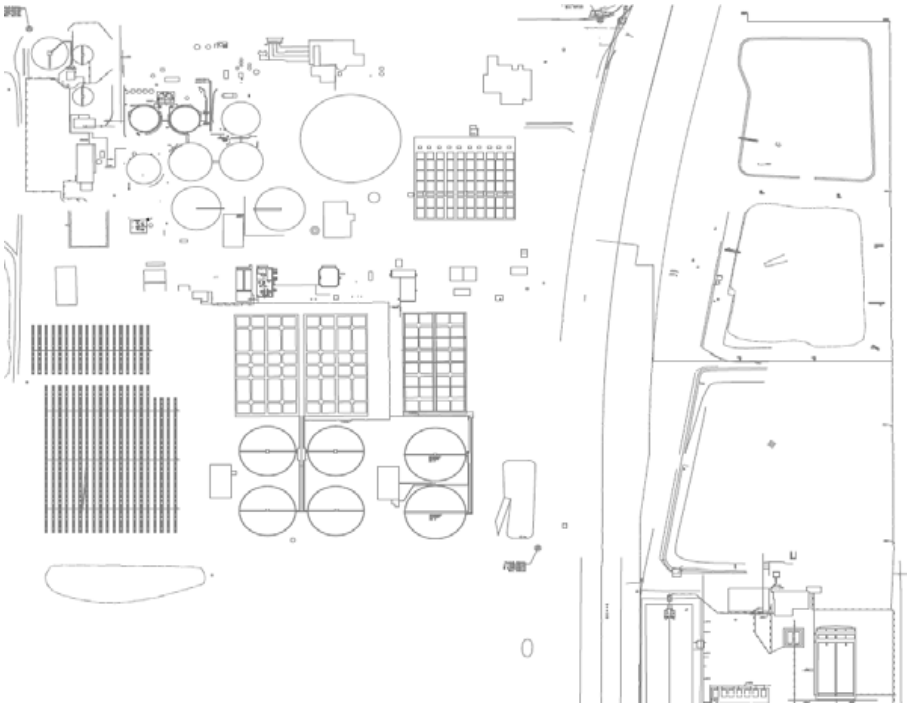

Figure 0-2

EXAMPLE OF EXISTING RP-1 FACILITY MODEL

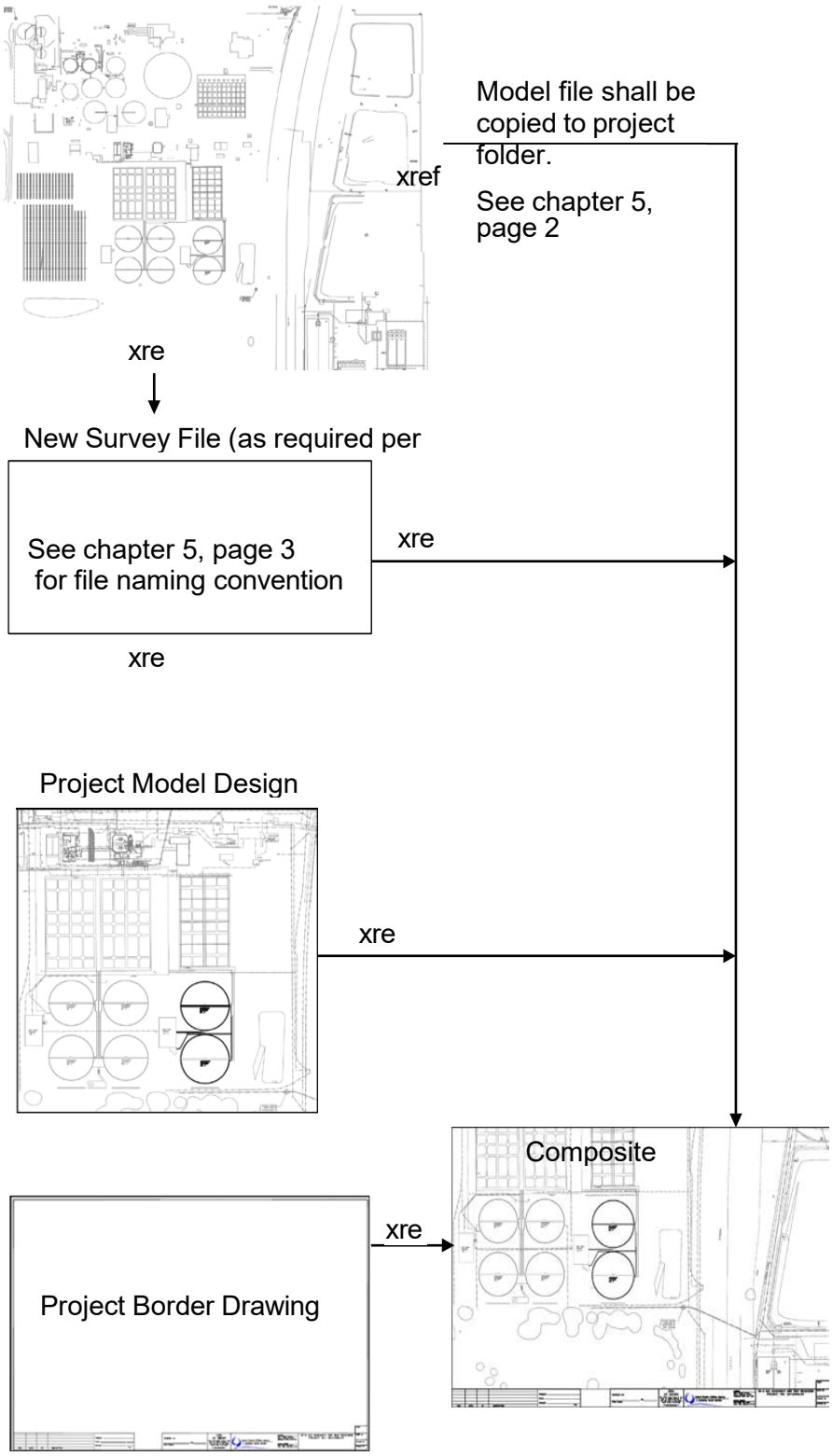

REFERENCE FILES

Master Model Files, Project Model Files and Project Borders are reference files. Reference files are the single most powerful capability of CAD and therefore it is important to understand what they are and how they are to be used.

In computer applications, files serve as a means of packaging data. Information saved in a file can be copied and transmitted to others.

Many CAD systems support a *reference file* function. This feature allows graphic information in one file to be referenced by another file. The value in referencing files is that information can be distributed to many drawings in a project, and as the base information changes, each of the associated drawings is automatically updated.

The most obvious application of this capability is the border sheet associated with a particular project. Much of the information on each drawing (i.e. project title, project number) is identical. With this in mind, a single project border sheet is created for the whole project and referenced to each drawing in the set. If the project title is changed, for example, the change only needs to be made to the original, and it will automatically show up on all drawings which it has been referenced. A similar approach may be to incorporate parts of any design file into many different drawings with the same kind of spontaneous update. A common multi-discipline approach involves referencing the work of separate design teams to each other. As each team's work progresses, the other teams are automatically kept up to date with the latest design information. The benefit of this approach is to allow a greater degree of project coordination while minimizing the redundant design effort.

REFERENCE FILE ATTACHMENTS (AUTOCAD)

AutoCAD has two unique references file attachment options, attach and overlay.

If you attach an external reference file with a "reference type" of "attach" and that drawing itself contains an "attached" xref, the "attached" xref appears in the current drawing as a nested attachment to the first xref. Like blocks, attached xrefs can be nested.

Overlaying is similar to attaching, except that when a drawing is attached or overlaid, any other overlays nested in it are ignored and, therefore, not displayed. In other words, nested overlays are not read in. All reference files, whether attached by the "overlay" or "attach" method, are displayed based on the most recently saved version of the drawing file.

Overlaid xrefs are designed for data sharing. By overlaying an xref, you can see how the drawing relates to other drawings. Also, overlaying an xref reduces the possibility that you might create self-referencing drawings (duplicate xrefs).

*All reference files are to be attached using the "overlay" preferred method.

REFERENCE FILE PATHS (AUTOCAD)

By default, AutoCAD stores the file name and path of the drawing used to create the external reference. Each time you open the drawing or use the XREF Reload option to update the external reference, AutoCAD checks the file name and path to determine the name and location of the associated drawing file. If the name of the drawing associated with the xref has changed, or the drawing has been moved, AutoCAD cannot resolve or load the external reference. This poses significant problems when drawings are shared between IEUA and consultants due to different drive mappings, server names or directory structure in use.

To eliminate the possibility of missing references, all external reference files should utilize the system variable "PROJECTNUMBER". Project numbers makes it easier to manage xrefs when drawings are exchanged between IEUA and Consultants. The project number points to a section in the registry that can contain one or more search paths for each project number defined. Refer to the AutoCAD Help files for more information on the PROJECTNUMBER system variable. The PROJECTNUMBER should be named the same as the project number/name in the Composite Drawing naming convention (Refer to Chapter 4, page 17). Project search paths will vary between IEUA and consultants.

REFERENCE FILE PATHS (AUTOCAD)

When a reference file is attached, AutoCAD provides the opportunity to store the full path to the directory in which the reference file resides. (Saved Path is not required, see chapter 4, page 17)

SEPARATION OF INFORMATION

Each Model File and Project Model File typically contains information associated with only one discipline (i.e. Civil, Mechanical, Electrical, etc.). On a given project, it is common to find at least one Model file for each discipline contributing to the design effort. It is critical that this separation of information be maintained even when the same person is producing two different Model files. For example, if a mechanical drafter produces plans containing both mechanical and structural information he/she would create a separate model file for each, placing each file in the appropriate location. Both model files are referenced, as necessary to create Composite Drawings but the information is never combined into one model file. Refer to Chapter 5 File Naming Convention for more information on separating files.

MEASUREMENT UNITS AND COORDINATES

Model files are always drawn "Full Size", that is one inch equals one inch and one foot equals one foot. Civil plans are to use "decimal" units and architectural plans are to use "architectural" units. Model plans are always drawn so that the information contained in the file is in its proper geographic position in the Design Plane. This position is defined by X and Y coordinates values based on the California State Plane Coordinate System (NAD83, Zone 5). The Agency's standard datum is the NAVD88, (North American Vertical Datum 88) system.

For work within the plants, the X and Y coordinate values should be based on the plant grid as found in the Facility Atlas plant grid layer. (Preferred for project cover the wide range area).

Schematic drawings such as Process & Instrumentation Diagrams shall be developed using a grid. The grid is a pattern of dots that extends over the drawing area. A default grid spacing of .125 or 1/8th of inch is preferred.

ROTATION

True North in a design file is always toward the top of the design plane. When using plant coordinate grid, Plant North should always be oriented in its true relationship to True North. Whether using State Plane coordinates or Plant Coordinates, views may be rotated to create a more desirable display without affecting the actual coordinates of the design data. Model files should never be rotated from their correct coordinates. Consistent use of this strategy guarantees alignment of design data between different disciplines and different projects. View rotation does not affect the way a design file appears when referenced to another file.

The preferred location for the North Arrow is the upper left of the plan view; do not point the North Arrow downward.

DIRECTORY ORGANIZATION

TABLE OF CONTENTS PAGE

EDMS 16

FACILITY ATLAS 16
FILE SERVERS 16
SUB-FOLDERS 16
FILE SERVER FOLDER STRUCTURE 17
PROJECT FOLDERS FOR CAD 17
MARK-UPS COLOR CODE SYSTEM 18

This chapter describes the organization of project file servers and folders on both workstations and servers. All IEUA workstations and servers are set up with similar folder structures and software to promote uniform system configuration. In addition, this chapter describes other means of storing data and documents such as the EDMS and Facility Atlas.

EDMS

IEUA utilizes an Electronic Document Management System (EDMS) to store and maintain project-related documents and drawings. All project related composite drawings are to be scanned and stored in the EDMS library. Refer to Chapter 9 Deliverables and Data Exchange for specifications regarding scanned images.

FACILITY ATLAS

The Facility Atlas is supported by ESRI's Spatial Database Engine (SDE). SDE is an object-based spatial data access engine and stores spatial data in commercial database management systems (DBMSs). Some of the Baseline Model Files are stored within SDE and are exported to CAD, and vice versus, when necessary, which results in a Project Model File.

FILE SERVERS

File Servers are setup to serve as a common storage location for many files of a certain type or files associated with a particular project. A separate project folder is designated for each project. Project numbers further separate the facility folder. Any project associated with that facility and project should have its files stored in that server location.

SUB-FOLDERS

Additional sub-folders or sub-sub-folders on workstations or servers are not authorized. Unauthorized folders will be removed without notice and the files moved to the appropriate project server location.

FILE SERVER FOLDER STRUCTURE

Each workstation is set up to automatically connect to the file server upon login. The project folders are set up with a folder structure for the storage of design files. Folder names, permissions, and descriptions are described below.

(Example CAD project folder)

PROJECT FOLDERS FOR CAD

G:\EN\EN01234

50 Design

50.6 Plan & Specifications

50.6.1 Native Format

Working CAD drawings and any reference files to build up a composite drawing must be stored in this folder. Example, DWG, PHOTOS, PDF, JPEG, BODER, WORD DOC, EXCEL, DGN, SERVEY DRAWING, FIGURE and MODEL DRAWINGS.
Additional copy of As-Built set here for reference.

New sub folder can be added under 5.6.1 Native Format, see example folders below etc.

As-Built Cad Files---*Submittal Cad files and PDFs from consultant.*

Cad Files *– Subfolder*
PDF Files *–Subfolder*
Redlines *-- Subfolder*

Field Photos---*sub folders can be added for different field dates.*

Old---*any files that not used in the current project: Junk files, Temp files, venders file, custom name files, and proposed Figure does not involve in final design as built. Files can be removed after As-built completed.*

Reference Information---*any records associated with the project.*

(For internal only)

MARK-UP COLOR CODE SYSTEM

For clarity between Engineers, Contractors, and CAD Operators, the mark-up color code system is required.

The designated colors are the following:

RED…..... Design and mark-ups from engineers and contractors to CAD.

GREEN…..... To be deleted (Not applicable for field)

BROWN OR BLUE… ..... Comments or notes from all disciplines.

YELLOW (highlighted)…..... Task completed, return the original markups to the markup owner for back check.

FILE NAMING CONVENTIONS

TABLE OF CONTENTS PAGE

INTRODUCTION 20

COMPOSITE FILES 20
PROJECT BORDER FILES 20
MODEL FILES 20
IEUA DISCIPLINE CODES 21
IEUA EXISTING MASTER BASE FILE NAMES 22
NAMING FOR SURVEY MODEL FILE NAMES 23
PROJECT MODEL FILE NAMES 24
PROJECT BORDER FILE NAMES 25
COMPOSITE FILE NAMES 26
DRAWING NUMBER ISSUED 27

INTRODUCTION

This chapter details IEUA's system for naming of electronic files. This system adheres to industry standards. Files that use this system include design files, scanned files, project files and other file types normally encountered in the use of CAD at IEUA.

Naming conventions for electronic files allow CAD users to determine the contents of a drawing without actually displaying the file. They also provide a convenient and clear structure for organizing files for particular projects. The system outlined here is intended to be used on all IEUA projects.

Exceptional situations that are not easily handled with this naming convention, such as figure drawings, proposals, or sketch-ups, a file naming convention is not required.

COMPOSITE FILES

Composite Files are the drawings having borders, titles and notes and are plotted as the deliverable of a project. They are a combination of referenced master file(s), the project border file and drawing annotation. Typical graphics placed in composite files are annotation, north arrows, graphic scales, sheet titles and plan/section callouts. Project borders should always be a referenced file attachment, not live elements within the Composite File. Some title block text will be live elements on the Composite File while other title block text belongs to the Project Border File.

For each composite drawing file, a single border file is attached as a reference in Paper Space Layout, insertion point at 0.0, scale 1 to 1.

Use annotation scale to assist in the placement of text, dimensions, and General blocks. (Dimensioning can be in the model or composite files) See chapter 7 for guidance.

PROJECT BORDER FILES

There is generally a single border file for each phase of a project (i.e. study phase, preliminary design, and final design). Multiple border files for a single project phase may be required on a project that involves combining projects.

MODEL FILES

A Model file contains the bulk of the actual design information for one or more drawings. Model files are created with 3-dimensional seed files even if the elements within the files are placed as 2-dimensional. All 2- dimensional elements are to be placed on elevation zero (0) unless approved otherwise. Model files should not contain scale- specific graphics (i.e.: north arrows, graphic scales, sheet titles or labels). Each Model file typically contains information associated with only one discipline (i.e.: Civil, Electrical, Mechanical,

etc.). This separation of information must be maintained even when producing multi-disciplined drawings. Model files are always drawn "Full Size", that is, one-inch equals one inch and one foot equals one foot.

MODEL FILES- EXISTING CONDITIONS

When using existing model CAD files, the graphics created to depict existing facilities are to be created in files separate from the new proposed project model.

IEUA DISCIPLINE CODES

The following characters define the file's engineering discipline: (Sheet Drawing)

G	General Sheets (starting with cover)…….....	G-1
D	Demolition Sheets……..	D-1
C	Civil/Yard Piping Sheets……	C-1
A	Architectural Sheets……...	A-1
S	Structural Sheets…… ……...	S-1
M	Mechanical Sheets……..	M-1
H	HVAC Sheets…… ……..	H-1
P	Plumbing Sheets (If extensive – otherwise use M-sheets)…… …….	P-1
E	Electrical Sheets……... ……..	E-1
I	P&ID Sheets…….. ……	I-1
L	Landscaping Sheets……	L-1

IEUA EXISTING MASTER BASE FILE NAMES

IEUA Treatment facilities consisting of six main facilities RP-1, 2, 3, 4, 5 and CCWRF. The master base CAD files are continuously maintained and updated throughout the life of the plants.

New Project

A copy of Master Base Model Files shall be placed in the project folder and renamed to the current project drawing number for referencing.

(See page 27 for issued drawing number)

(Original from the master vault)	(Example: saved to project folder and added DXXXX number in font)
RP-1 Master Base….	**DXXXX**-RP-1 Master Base
RP-1 Master Topo….	**DXXXX**-RP-1 Master Topo
RP-2 Master Base….	**DXXXX**-RP-2 Master Base
RP-3 Master Base….	**DXXXX**-RP-3 Master Base
RP-4 Master Base….	**DXXXX**-RP-5 Master Bade
RP-5 Master Base….	**DXXXX**-RP-5 Master Base
CCWRF Master Base….	**DXXXX**-CCWRF Master Base
20topo….	**DXXXX**-20topo

The information in the Master Facility Base files located in project folders shall be as is per the time that project had started; it can be updated by request from the project manager.

Note: Model drawings transferred from previous projects shall be renamed to current project drawing number. (See page 4)

Example old model number: (EX-Utili-xxx) to current project drawing number: DXXXX-EX-Utili-xxx, to be used exclusively for current project only. (See page 4)

NAMING FOR SURVEYS MODEL FILE NAMES

Copy original file in the project folder and add DXXXX in front of survey model.

For example:
Original Survey file 13000_R2

Add DXXXX in front:
New Survey file name: DXXXX-13000_R2.
This system tag will help to recognize when, where, and project survey mode is being done.

PROJECT MODEL FILE NAMES

File names for Project Model (see page 20) are derived from the project number, discipline and the type of information contained in the files as follows:

Drawing Number Drawing # is the IEUA Project Number. Number may exceed the number of characters shown. (See page 27 for drawing number issued)

Discipline Code:

G	General	**H**	HVAC
D	Demolition	**P**	Plumbing
C	Civil/Yard Piping	**E**	Electrical
A	Architectural	**I**	P&ID
S	Structural	**L**	Landscaping
M	Mechanical		

Sequence Number: 101 – 999

File Extension: File extensions will adhere to the design software used to create drawing (.DWG).

Examples: DXXXX-C101.dwg
(*Typical to all disciplines)*

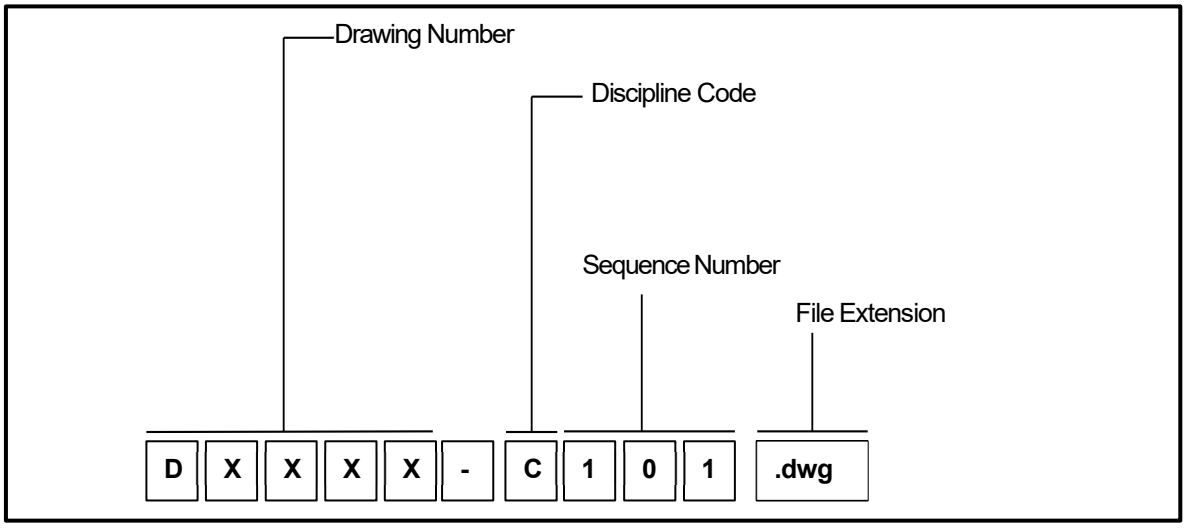

PROJECT BORDER FILE NAMES

File names for the Project Border (see page 20) are derived from the project number and drawing size.

Drawing Number: Drawing # is the IEUA Project Number. Number may exceed the number of characters shown (See page 27 for project number issued)

Drawing Size:		
	B	11” x 17”
	D	22” x 34”
Border Designation:	BDR	

File Extension: File extensions will adhere to the design software used to create drawing (.DWG).

Examples: DXXXX-DBDR.dwg

Note: if more than one border is to be used in same project, the second border shall be DXXXX-DBDR1.dwg

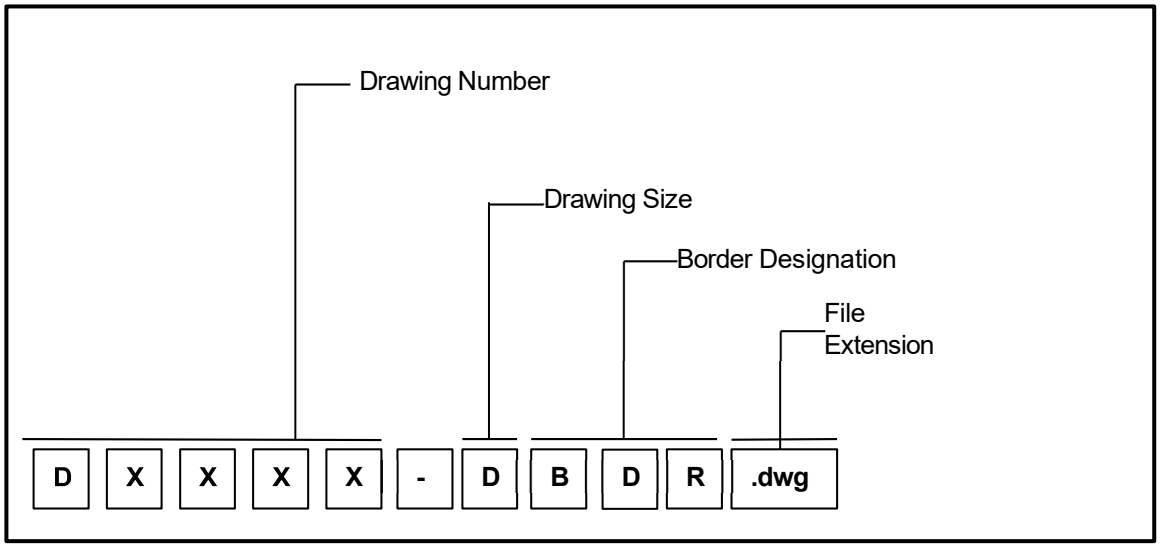

COMPOSITE FILE NAMES

File names for Composite Drawings (see page 20) are derived from the project number, discipline and the type of information contained in the files as follows:

Drawing Number: Drawing # is the IEUA Project Number with hyphens. Number may exceed the number of characters shown.
(See page 27 for project number issued)

Discipline Code:

G	General (starting with)	**H**	HVAC
D	Demolition	**P**	Plumbing
C	Civil/Yard Piping	**E**	Electrical
A	Architecture	**I**	P&ID
S	Structural	**L**	Landscaping
M	Mechanical		

Sequence Number: 001 – 100 (Only one number per sheet. Do not used multiple Layouts per Sheet)

File Extension: File extensions will adhere to the design software used to create drawing (.DWG).

Examples: DXXXX-C001.dwg (*Typical to all disciplines*)

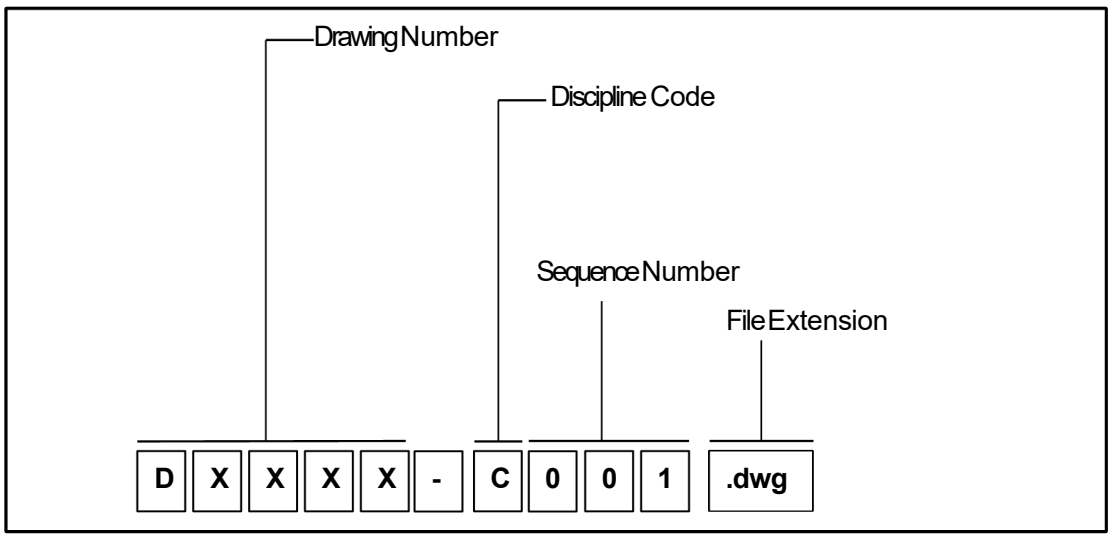

FOR DRAWING NUMBER ISSUED:

Requested by……..

Project Number:……. (example EN1234)……

Project Name…….……

Type of Project: (check one)

D1000	General Administrative
D2000	Potable Water
D3000	NRW System
D4000	Regional System
D5000	Recycled Water
D6000	Waste Water Treatment Plants
D7000	Desalination Plants
D8000	Basin Projects

Data Base Entry

Date:…….. Drawing

Number Issued:……D6XXXX Issued

By:……...

Date:……

……

(For IEUA issue only)

LAYER CONVENTIONS

TABLE OF CONTENTS PAGE

INTRODUCTION 29
AIA LAYER GUIDELIINES 30
Discipline Code 30
Major Group 30
Minor Group 30
Status Field 30
Common Layers 31
GENERAL 32
DEMOLITION 33
CIVIL 34
ARCHITECTURAL 35
STRUCTURAL 36
MECHANICAL 37
HVAC 38
PLUMBING 39
ELECTRICAL 40
P&ID (INSTRUMENTATION) 41
LANDSCAPE 42

INTRODUCTION

This chapter defines the layer conventions currently in use at the Agency. The layers defined in this chapter should be used for all Agency CAD work, whether work is produced in-house or by an outside contractor or consultant. All layer names are to be upper case.

These layer names follow The American Institute of Architects (AIA) CAD Layer Guidelines, Second Edition and are organized by discipline. It may prove necessary to add or revise layer names for certain unique types of drawings. Additional layer names may be created as needed as long as they are consistent with the AIA CAD Layer Guidelines, a brief description is provided. The use of additional layer names should be documented and reported to the IEUA Project Manager and CAD Manager.
See example shown on page 3 thru 14 for general guideline only.

Note: Do not force objects Linetype, Lineweight, Transparency, and Color.

All objects shall be per bylayer. (linetype, lineweight, and color/transparency)

AIA LAYER GUIDELINES

The layer naming convention typically incorporates three components – a discipline designator, a major element category designator, and a minor element category designator. In some cases, the names are divided into four components, where the last item is a status field.

Discipline Code

The discipline code is two-character field with the second character being a hyphen. The defined discipline codes are the same for both layers and files names. Refer to Chapter 5, File Naming Convention for a list of discipline codes.

Major Group

The major group designation identifies the building system. Although major groups are logically grouped with specific discipline codes, it is possible to combine major group codes with any of the discipline codes.

Minor Group

This is an optional, four-character field for further differentiation of major groups. The minor group field can be defined by the user, which allows additional layers to be added to accommodate special project requirements. This should only be done if a defined layer does not apply to a project.

Status Field

The status field is a four-character designator that differentiates new construction from existing. The status field is optional and is only needed when phases of work must be differentiated. Refer to the AIA Layer Guidelines for more information.

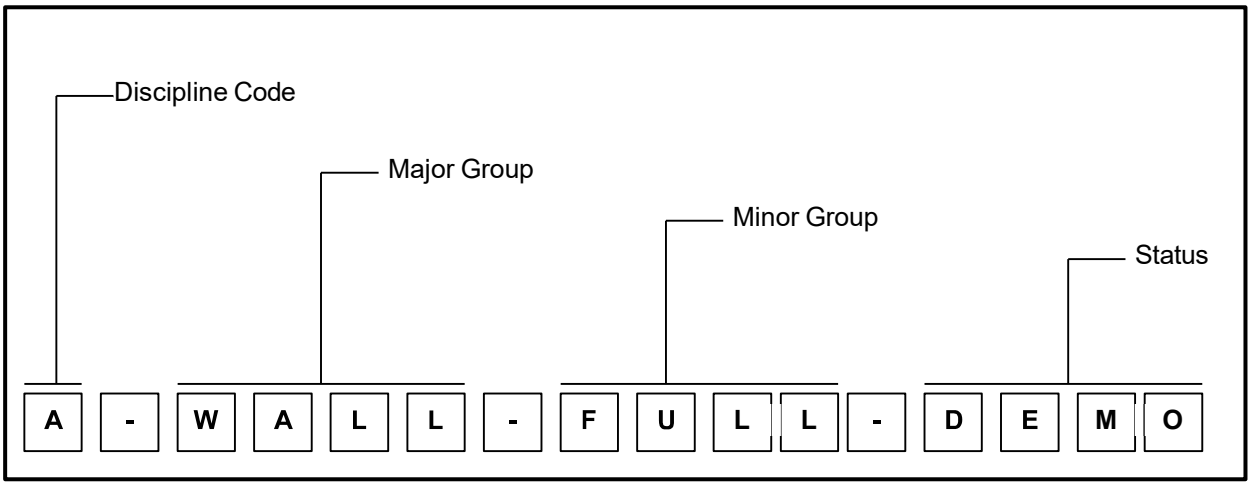

COMMON LAYERS

Annotation Layers

Layer Name	Color	Linetype	Description
ANNO-TEXT			Text
ANNO-REDL			Redline
ANNO-SYMB			Symbols
ANNO-LEGN			Legends and schedules
ANNO-DIMS			Dimensions
ANNO-TTLB			Border and Title Block
ANNO-NOTE			Notes
ANNO-NPLT			Construction lines, non-plotting info
ANNO-KEYN			Key notes
ANNO-REVS			Revisions
ANNO-XREF			Referenced model files

GENERAL

Layer Name	Color	Linetype	Description
G-PLAN			General plan
G-SITE			General site plan
G-GRID			Column grid and tags
G-SPLN			Strategic plan scenarios
G-STAG			Staging area
G-WRKA			Work area
G-AQMD			AQMD permit sites
G-NFPA-DIV1			NFPA division 1 hazardous area classification

DEMOLITION

Layer Name	Color	Linetype	Description
D-PLAN			General plan
D-SITE			General site plan
D-GRID			Column grid and tags
D-SPLN			Strategic plan scenarios
D-STAG			Staging area
D-WRKA			Work area
D-AQMD			AQMD permit sites
D-NFPA-DIV1			NFPA division 1 hazardous area classification

CIVIL

Layer Name	Color	Linetype	Description
C-DETL			Details
C-SECT			Sections
C-SECT-PATT			Textures and hatch patterns
C-TOPO-MAJR			Proposed major contour lines
C-TOPO-MNOR			Proposed minor contour lines
C-TOPO-TEXT			Contour elevations
C-SPOT			Proposed spot elevations
C-SURV			Benchmarks, survey control lines
C-BORW			Borrow/spoil area
C-ALGN			Horizontal alignment
C-AREA			Area code boundary (process areas)
C-BLDG			Bldg., primary structures
C-DEMO			Demolition
C-EROS			Riprap, breakwaters, dikes, jetties
C-PAVE			Edge of pavement
C-PKNG			Parking lots
C-PKNG-DRAN			Parking lot drainage slope indictors
C-PKNG-ISLD			Parking islands
C-PKNG-STRP			Parking lot striping, handicapped
C-PROP			Property lines, survey benchmarks
C-PROP-BRNG			Bearing and distance labels
C-PROP-ESMT			Easements, right-of-ways, setbacks
C-PTIC			Plant coordinate grid tics
C-RAIL			Railroad outlines, centerlines
C-ROAD			Roadways
C-ROAD-CNTR			Center lines
C-ROAD-CURB			Curbs
C-SITE			Fences, handrails, ramps, signs
C-STAG			Construction staging
C-STIC			State plane grid tics
C-STRM			Storm drainage, catch basins, inlets
C-STRU			Structures
C-SURV			Benchmarks, primary feature align
C-TOPO			Major/minor contours, cut/fill slopes
C-TRCK			Trickling filter clarified effluent
C-TUNL			Tunnel outlines
C-TUNL-CNTR			Tunnel centerlines
C-TUNL-LADD			Tunnel access points
C-UTIL			Power lines, telephone poles, hydrants
C-VEGE			Vegetation
C-WRKA			Work area, project boundary
C-DRAN			Drains
C-GUYW			Down guy wires
C-HOTW-RETN			Hot water return
C-HOTW-SUPP			Hot water supply
C-HOTW-UNKN			Unknown water
C-INTR			Interplant sewers
C-IWTR			Industrial water
C-OUTF			Ocean outfall

ARCHITECTURAL

Layer Name	Color	Linetype	Description
A-CLNG			Ceiling information
A-CLNG-GRID			Ceiling grid
A-DETL			Details
A-SECT			Sections
A-SECT-PATT			Textures and hatch patterns
A-ELEV			Interior & exterior elevations
A-AREA			Area calculation boundary lines
A-AREA-IDEN			Area calculations, room numbers
A-AREA-PATT			Area cross hatching
A-COLS			Columns
A-DOOR			Doors
A-DOOR-JAMB			Dorr jamb
A-DOOR-OTLN			Door outlines
A-EQPM			Equipment
A-EQPM-IDEN			Equipment identification numbers
A-FLOR			Floor plan information
A-FLOR-IDEN			Room numbers, names, etc.
A-FLOR-OTLN			Floor or building outline
A-FURN			Furniture
A-GLAZ			Windows, glazed partitions
A-GRID			Planning grid or column grid
A-HVAC			Heating, ventilation and air cond.
A-LITE			Light fixtures
A-PMFN			Materials and finish plan
A-POCC			Occupancy plan
A-STRS			Stairs
A-WALL			Exterior/Interior walls
A-WALL-CNTR			Wall centerlines
A-ROOF			Roof information
A-ROOF-OTLN			Roof outline

STRUCTURAL

Layer Name	Color	Linetype	Description
S-DETL			Details
S-SECT			Sections
S-SECT-PATT			Textures and hatch patterns
S-ELEV			Interior & exterior elevations
S-BEAM			Beams
S-COLS			Primary & secondary columns
S-DEMO			Demolition
S-FNDN			Footings, grade beams, piles
S-GRAD			Elevated grading, floor grading
S-GRAT			Elevated grating, catwalks
S-GRID			Grid lines, column tags
S-HNDR			Handrails
S-JOIN			Construction joints, expansion joints
S-METL			Miscellaneous metal
S-OPNG			Opening
S-RBAR			Rebar
S-SLAB			Slab outline, control joints
S-SPPT			Miscellaneous fasteners, anchor bolts
S-STRS			Stair control joints, ladders
S-WALL			Concrete walls, CMU walls

MECHANICAL

Layer Name	Color	Linetype	Description
M-CHEM-UNKN			Unknown chemical
M-CHLR			Chlorine solution
M-CSTC			Caustic Solution
M-FCL2			Ferrous chloride
M-FCL3			Ferric chloride
M-H2O2			Hydrogen peroxide
M-HCL_			Hydrochloric Acid
M-NAOC			Sodium hypochlorite
M-NAOH			Sodium Hydroxide
M-POLY			Polymer
M-AIR_-UNKN			Unknown air system
M-CMPH			High pressure compressed air
M-CMPL			Low pressure compressed air
M-FOUL			Foul air
M-INST			Instrument air
M-O2			Gaseous Oxygen
M-DETL			Details
M-SECT			Sections
M-SECT-PATT			Textures and hatch patterns
M-ACET			Acetylene
M-GAS_-UNKN			Unknown gas
M-HPDG			High pressure digester gas
M-LPDG			Low pressure digester gas
M-NGAS			Natural gas
M-PGAS			Propane gas
M-EQPM			Equipment
M-EXHS			Exhaust system
M-MISC			Unknown system
M-SAMP			Sample
M-FUEL			Fuel oil
M-OIL_-UNKN			Unknown oil
M-DGSL			Digester sludge
M-DGSN			Digester supernatant
M-GRIT			Grit
M-PEFF			Primary effluent
M-PIFF			Primary influent
M-PRSL			Primary sludge
M-RASL			Return activated sludge
M-SCUM			Scum
M-SLDG-UNKN			Unknown sludge, scum or grit
M-WASL			Waste activated sludge
M-STEM			Steam systems
M-STEM-UNKN			Unknown steam

HVAC

Layer Name	Color	Linetype	Description
H-DATA			Data line
H-EQPT			Equipment
H-INST			Insert any data table
H-LEAD			Leader line
H-SIG			Signal
H-TEXT			General text and note
H-XREF			Reference files

PLUMBING

Layer Name	Color	Linetype	Description
P-DATA			Data line
P-EQPT			Equipment
P-INST			Insert any data table
P-LEAD			Leader line
P-SIG			Signal
P-TEXT			General text and note
P-XREF			Reference files

ELECTRICAL

Layer Name	Color	Line type	Description
E-DETL			Details
E-SECT			Sections
E-SECT-PATT			Textures and hatch patterns
E-ALRM			Alarm systems
E-AUXL			Auxiliary systems
E-CCTV			Closed circuit TV
E-COMM			Fiber optic cable, telecommunications
E-COMM-VALT			Fiber optic vaults, telecommunications
E-DATA			Data outlets
E-DUCT			Electrical conduit, duct bank
E-ELCT			Electrical cable tray
E-ELCT-VALT			Electrical vaults
E-GRND			Ground system
E-LITE			Lighting
E-NFPA-DIV1			NEC NFPA 820 Hazardous area classifications, division 1
E-NFPA-DIV2			NEC NFPA 820 Hazardous area classifications, division 2
E-POWR			Power
E-SERT			Security
E-SOUN			Sound/PA Systems
E-PLAN			Site plan
E-POWR-EQPM			Major power equipment
E-POWR-EXTL			External of outdoor power systems
E-LITE-EQPM			Major lighting equipment
E-LITE-PNLS			Lighting panels
E-LNWK-FINE	1 (red)		Schematic line work using the Fine line thickness
E-LNWK-THIN	2 (yellow)		Schematic line work using the Thin line thickness
E-LNWK-MEDM	3 (green)		Schematic line work using the Medium line thickness
E-LNWK-WIDE	4 (cyan)		Schematic line work using the Wide line thickness

P&ID (INSTRUMENTATION)

Layer Name	Color	Linetype	Description
N-DATA			Data line
N-EQPT			Equipment
N-INST			Insert any data table
N-LEAD			Leader line
N-SIG			Signal
N-TEXT			General text and note
N-XREF			Reference files

Note: the general layers above for guidelines only. Additional layers per smart P&ID system and logical control by P&ID Engineers.

LANDSCAPE

Layer Name	Color	Linetype	Description
L-DETL			Details
L-SECT			Sections
L-SECT-PATT			Textures and hatch patterns
L-IRRG			Irrigation piping
L-DEMO			Demolition
L-PLNT			Plant and landscape materials
L-SITE			Site improvements
L-WALK			Walks and steps
L-HYDR			Hydro seeding, seed, sod
L-TURF			Mulching outline
L-SEED			Seed, sod

GRAPHIC/FILE STANDARDS

TABLE OF CONTENTS PAGE

INTRODUCTION 44

LINE WEIGHTS 45
LINE TYPES/STYLES 46
DRAWING SCALES 47
TEXT STYLES/FONTS 48
TEXT STYLES/FONTS 49
TEXT STYLES/FONTS 50
TEXT HEIGHTS 51
AUTOCAD PLOTTING PARAMETERS 52
AUTOCAD PLOTTING PARAMETERS 53
PLT PLOTTING PARAMETERS 54
SETTING FILES 54
PEN TABLES 54
BORDER SHEETS 55
SHEET SIZES 55
TITLE BLOCK/COVER SHEET 55
SHEET IDENTIFICATION BLOCK 56
SHEET IDENTIFICATION BLOCK 57
PLOTTING FROM AUTO CAD TO 22" X 34" PDF (DEFAULT) 58
PLOTTING FROM AUTO CAD TO 22" X 34" HARD COPY (DEFAULT) 58
PLOTTING FROM AUTO CAD TO 11" X 17" HARD COPY (DEFAULT) 59
PLOTTING FROM AUTO CAD TO 11" X 17" PDF (DEFAULT) 59

INTRODUCTION

This chapter contains examples of the graphics and symbols available for use on IEUA projects. This is a palette of graphics from which the drafter/designer may produce a completed drawing.

"There are no shortcuts
to anyplace worth going"
-Beverly Sills

WEIGHTS

The six primary and three optional line weights defined in Table 0-1, are considered sufficient and should not be expanded unless an appreciable improvement in drawing clarity or contrast can be realized. The AutoCAD color column represents the primary color, for additional colors using the same line weight refer to page 52.

Table 0-1

Line Thickness	AutoCAD Color			In.	Line Weight Sample
Fine	1 (Red)	-	-	.006	
Thin	2 (Yellow)	-	-	.006	
Medium	3 (Green)	-	-	.0118	
Wide	4 (Cyan)	-	-	.0200	
Extra Wide	5 (Blue)	-	-	.0220	
Option 1	6 (Magenta)	-	-	.018	
Option 2	7	-	-	.02	
Thin	8 (50%Screen)	-	-	.004	
Option 3	9 (70%Screen)	-	-	.006	Not preferred

The following are typical usage for the line widths shown:

- Fine (.006) Fine lines should be used sparingly, mostly for poche/hatching (this line thickness typically does not reproduce well in blue-line format and/or photocopies).
- Thin (.006) Thin lines should be used for depicting dimension lines, dimension leader/witness lines, note leader lines, line terminators, phantom lines, hidden lines, center lines, long break lines, schedule grid lines, and other object lines seen at a distance.
- Medium (.008) Medium lines should be used for depicting minor object lines, dimension text, text for notes, callouts, and schedule text.
- Wide (0.0118) Wide lines should be used for major object lines, cut lines, section cutting plane lines, and titles.
- Extra Wide (.0177) Extra wide lines should be used for minor title underlining, schedule outlines, large titles, and object lines requiring special emphasis. Extra wide widths are also appropriate for use as an elevation grade line, building footprint, or top of grade lines on section/foundation details.

***Note**: all objects line weight, line type, or color shall be drawn as default by layer (do not force line weight, type, or color in the same layer).*

The use of AutoCAD Polylines with a defined width is discouraged. However, if they are used the polyline widths must be uniform throughout the extent of the line. Variable line width polylines do not translate into other CAD packages.

LINE TYPES/STYLES

The line styles defined in Table 0-2 are considered sufficient and should not be expanded unless an appreciable improvement in drawing clarity or contrast can be realized. For AutoCAD the global linetype scale factor (LTSCALE) for all drawings should be set to .5 or ½ of the plotted scale. The paper space linetype scaling (PSLTSCALE) should be assigned a value of 1.

Table 0-2

AutoCAD Line Type	MicroStation LineStyle	Example
Border	SAME	
Center	SAME	
Continuous	SAME	
Dashdot	SAME	
Dashed	SAME	
Divide	SAME	
Hidden	SAME	
Phantom	SAME	
Fence	SAME	
Electrical	SAME	E E E

The following are typical usage for the line widths shown:

Note: all objects line type/styles shall be drawn as default by layer (do not force line type/styles in the same layer).

- Border line type should be used to delineate city or county boundaries.
- Center line type should be used to depict the centerline of a street or piece of equipment.
- Continuous line type is the most common and is used for all object lines, dimension lines, extension lines, leader lines, and other visible lines.
- Dashdot line type should be used sparingly. (Line types with dots typically do not reproduce well in blue-line format and/or photocopies).
- Dashed line type should be used for existing/screen features such as utilities, edge of pavement, and curbs. For future proposed feature shown in black.
- Divide line type should be used to depict flow lines, rivers, streams and other water features.
- Hidden line type should be used to show hidden features of an object or feature.
- Phantom line type should be used for right of way lines, property boundaries, outline, and match lines.

DRAWING SCALES

Typical drawing scales for inch-pound measurements are shown in Table 0-3.

Table 0-3

Drawing Type	Preferred Drawing Scale		Model Linetype Scale
Site plans	1” = 10’ 1” = 20’ 1” = 40’ 1” = 100’ 1” = 1000’ 1” = 1mile		5 10 20 50 150 ½ mile
Floor plans	1/4” = 1’ – 0” 1/8” = 1’ – 0”		
Plan and Profiles	Horizontal 1” = 40’	Vertical 1” = 4’	
Sections	1/4” = 1’ – 0” 3/8” = 1’ – 0” 1/2” = 1’ – 0” 3/4” = 1’ – 0”		24 16 6 4
Details	1/4” = 1’ – 0” 3/8” = 1’ – 0” 1/2” = 1’ – 0” 3/4” = 1’ – 0” 1” = 1’ – 0”		
Schematics	Not To Scale		1
Sheet			Set LTscale @ .5 or 1

TEXT STYLES/FONTS

Contrasting text styles or fonts are used within a drawing to delineate types of information. IEUA adheres to the five fonts shown in Table 0-4 for AutoCAD. If consultants desire to use fonts in addition to those listed, they should first submit a request to IEUA in writing and receive written authorization to do so. Consideration shall be given to adding new non-proprietary fonts to this standard where deemed necessary. In such cases these fonts shall have been developed by the consultant or in the public domain. IEUA shall not be held liable for copyright violations resulting from a consultant's intentional or inadvertent use of a proprietary font not know to IEUA, nor shall IEUA be responsible for assuring that the consultant obtains proper licensing for the proprietary fonts. For AutoCAD both the ASCII (.SHP) and the compiled binary (.SHX) files shall be provided.

PRIMARY TEXT STYLE/ FONT

Text Font	Romans (for general notes, callouts, dimensions)
Text Color	Green (do not force color)
Text Height	0.10
Dim Leader	Red
Arrowhead Size	0.125

<u>Secondary Text Style/ Font</u>

- Monotext font. This font creates text characters that are evenly spaced. Monotext font should be used where text fields need to be aligned such as in schedules or, in some cases title blocks.
- Proportional font. This font creates text where the characters are proportionally spaced. It is appropriate for labels or title blocks.
- Slanted font. A slanted font is used where text needs to be easily distinguished from other text. Using the proportional font with the obliquing angle or slant set to 21 degrees creates the desired effect.
- Filled font. Filled fonts are used primarily for titles and on cover sheets. The recommended AutoCAD font is the Swiss TrueType font (Note: the TEXTFILL system variable needs to be set to "1").
- Outline font. Outline fonts are used to label an open space or area. The recommended AutoCAD font is the Swiss TrueType font.

Table 0-4		
Monotext Font	Style Name: Monotext	Font Name: Monotxt.shx
	ABCDEFGHIJKLMNOPQRSTUVWXYZ abcdefghijklmnopqrstuvwxyz	
Proportional	Style Name: Standard	Font Name: Simplex.shx
	ABCDEFGHIJKLMNOPQRSTUVWXYZ abcdefghijklmnopqrstuvwxyz	
Slanted	Style Name: Slanted (Oblique Angle = 21)	Font Name: Simplex.shx
	ABCDEFGHIJKLMNOPQRSTUVWXYZ *abcdefghijklmnopqrstuvwxyz*	
Filled Font	Style Name: Bold	Font Name: Swis721 BT
	ABCDEFGHIJKLMNOPQRSTUVWXYZ abcdefghijklmnopqrstuvwxyz	
Outline Font	Style Name: Outline	Font Name: Swis721 BdOut BT
	ABCDEFGHIJKLMNOPQRSTUVWXYZ **abcdefghijklmnopqrstuvwxyz**	

Table 0-4	
Proportional	Font: 0 ABCDEFGHIJKLMNOPQRSTUVWXYZ abcdefhıjklmnopqrstuvwxyz
Slanted	Font: 0 (Slant: 21) ABCDEFGHIJKLMNOPQRSTUVWXYZ abcdefhıjklmnopqrstuvwxyz
Filled Font	Font: 43 ABCDEFGHIJKLMNOPQRSTUVWXYZ abcdefhijklmnopqrstuvwxyz
Outline Font	Font: 42 ABCDEFGHIJKLMNOPQRSTUVWXYZ abcdefhijklmnopqrstuvwxyz

TEXT HEIGHTS

Table 0-5 lists text sizes using inch-pound scales.

Table 0-5				
Drawing Scale	**Scale Factor**	**0.10**	**0.175**	**0.250**
		Text Sizes in Inches		
1/8” = 1’ – 0”	96:1	9.6	16.80	24.00
1/4” = 1’ – 0”	48:1	4.8	8.40	12.00
3/8” = 1’ – 0”	32:1	3.2	5.60	8.00
1/2” = 1’ – 0”	24:1	2.4	4.20	6.00
3/4” = 1’ – 0”	16:1	1.6	2.80	4.00
1” = 1’ – 0”	12:1	1.2	2.10	3.00
1” = 10’	120:1	12.00	21.00	30.00
1” = 20’	240:1	24.00	42.00	60.00
1” = 40’	480:1	48.00	84.00	120.00
1” = 100’	1200:1	120.00	210.00	300.00
1” = 1000’	12000:1	1200.00	2100.00	3000.00
1” = 1mile	63360:1	6336.00	11088.00	3801.60
Full	1:1	0.10	0.175	0.250

The following are typical usage for the text heights shown:

- 0.10 text height is used for loop diagrams and control logic diagrams.
- 0.10 should be used for call outs, dimensions, and general notes.
- 0.175 text height is used when a slightly larger label is necessary such as street names, city or county names.
- 0.250 text height is generally used in conjunction with the bold text style and is used for titles.

AUTOCAD PLOTTING PARAMETERS

Table 0-6 maps the color to pen number used for plotting.

Table 0-6

Color No.	Pen No.	Pen Weight		
		IEUA.ctb		IEUA-Half.ctb
		MM	Inches	
1		.1524	.006	For production of half size. Also, used IEUA.ctb See page 16 for set up samples, or it can be reduced from full 22x34 PDF to half 11x17 PDF.
2		.1524	.006	
3		.2032	.008	
4		.29972	.0118	
5		.44958	.0177	
6		.4572	.018	
7		.508	.02	
8		.1016	.004	
9		.1524	.006	
10		.65024	.0256	
12		.29972	.0118	
14		.2032	.008	
15		-	.008	
20		-	.008	
21		-	.008	
26		-	.008	
30		-	.008	
31		-	.008	
36		-	.008	
46		-	.008	
50		-	.008	
52		-	.008	
54		-	.008	
60		-	.008	
61		-	.008	
66		-	.008	
70		-	.008	
71		-	.008	
76		-	.008	
80			.008	
82		-	.008	
84		-	.008	
90		-	.008	
91		-	.008	
96		-	.008	
100		-	.008	
101		-	.008	
106		-	.008	
116		-	.008	
126		-	.008	
130		-	.008	
132		-	.008	
134		-	.008	
140		-	.008	

Table 7-6 (Continued)			
Color No.	Pen No.	Pen Weight	
		IEUA.ctb	
		MM	Inches
141		.2032	.008
146		-	.008
150		-	.008
151		-	.008
156		-	.008
166		-	.008
170		-	.008
172		-	.008
174		-	.008
180		-	.008
181		-	.008
186		-	.008
190		-	.008
191		-	.008
196		-	.008
206		-	.008
210		-	.008
212		-	.008
214		-	.008
220		-	.008
221		-	.008
226		-	.008
230		-	.008
231		-	.008
236		-	.008
246		-	.008
250		-	.008
251		-	.008
252		-	.008
253		-	.008
254		-	.008

PLT PLOTTING PARAMETERS

IEUA utilizes PLT from AutoCAD to process plot requests. With this plotting environment, you can plot the active drawing or plot multiple drawings. The plotting environment utilizes certain default parameters.

Setting Files

The PLT settings file is used with AutoCAD plotting to provide a way to plot hard copy or PDF, review line weight sample on Chapter 7, page 2 per prior to start layout design drawings. ***Notice: please do not modify IEUA.ctb template file!***

(See pages 15 and 16 for plot samples full and half)

Settings File	Parameter	Folder Path to pen table
IEUA.ctb	Pen_table	*G:\EN\1 Design Standards & Details Back Up Folder\IEUA Civil 3D Project Folder\AutoCad Plot Styles*
IEUA-half size 11x17	See sample page 16	

Pen Tables

To ensure plotting consistency, the Agency has created a standard pen table. The pen table symbolizes elements from the design file as are processed for plotting.

Text Text elements on specific levels are set to plot a specified line weight. For specific information refer to the pen table.

File name tag A special character string placed in the Agency standard border is replaced at plot time with the full path specification and file name of the plotted design file.

Plot date tag A special character string placed in the Agency standard border is replaced at plot time with the date the plot was submitted for plotting.

Plot time tag A special character string placed in the Agency standard border is replaced at plot time with the time the plot was submitted for plotting.

User name tag A special character string placed in the Agency standard border is replaced at plot time with the user ID of the person submitting the plot.

BORDER SHEETS

Sheet Sizes

Table 7.8.1 indicates the standard sheet sizes and their typical uses:

Table 0.7		
Size	**Designator**	**Typical Uses**
11 x 17	**B**	Reduced drawings from D Size originals, Supplemental Drawings, Mock-up sheets, loop diagrams.
22 x 34	**D**	Construction drawings.

Cover Sheet

The cover sheet area is that portion of the sheet containing project, client, designer, sheet identification, and sheet management information needed by the user of the sheet. The guidelines for the cover sheet area provide criteria for the location of like information shown in data blocks within the title block area for easy and consistent retrieval and filing of drawings. Data blocks include the following:

Vicinity Map (a general location of the project within the IEUA's service area)

Project Location Map (a specific location of the project within a plant, facility or residential/commercial area)

IEUA Logo

Project Name

Project Number

Date

Approval signature block for Department Manager, Principal Engineer, and Project Manager

The following other items are permitted based on the Project Manager or the Project's preference:

Volume number to tie the plans with other the project documents such as technical specifications (i.e. Vol. 2 of 2 Plans)

Dig-Alert logo

Basis of Bearing

Benchmarks

Index for drawing sheets (if small enough to fit within the cover sheet)

Sheet Identification Block

The Sheet identification block (Figure 7.9) contains the sheet identifier, sheet count, job number and drawing number. The sheet identifier or Drawing Number is composed of the discipline code/designator, the sheet type designator, and the sheet sequence number described in Chapter 8, Drawing Set Organization. The "1" pertains to the sheet identification number. "XX" refers to the total number of sheets for the entire drawing set. "EN1234" refers to the consultant's job/project number, and "DXXXX-001" refers to IEUA's drawing number.

Designer Identification Block

The designer identification block (Figure 7.10) contains the logo or name of company that designed the sheet. This space also includes an area to accommodate the placing of a professional seal when required.

Management Block

The management block (Figure 7.11) contains information Approval signature block for Department Manager and Deputy Manager. This will only be applicable to the front cover sheet. (insertion point @ 0,0)

Issue Block

The issue block (Figure 7.12) contains a history of revisions, addenda, and/or clarifications to the sheet. The first entry should be placed on the lower left-hand line of the issue block and subsequent entries should be made above it.

Production Data Block

The production data block (Figure 7.13) contains management information concerning the production of the sheet. Data that is assigned to this area includes file project path, file name, and date. The production data block is located along the binding strip outside the border vertically on the lower left side

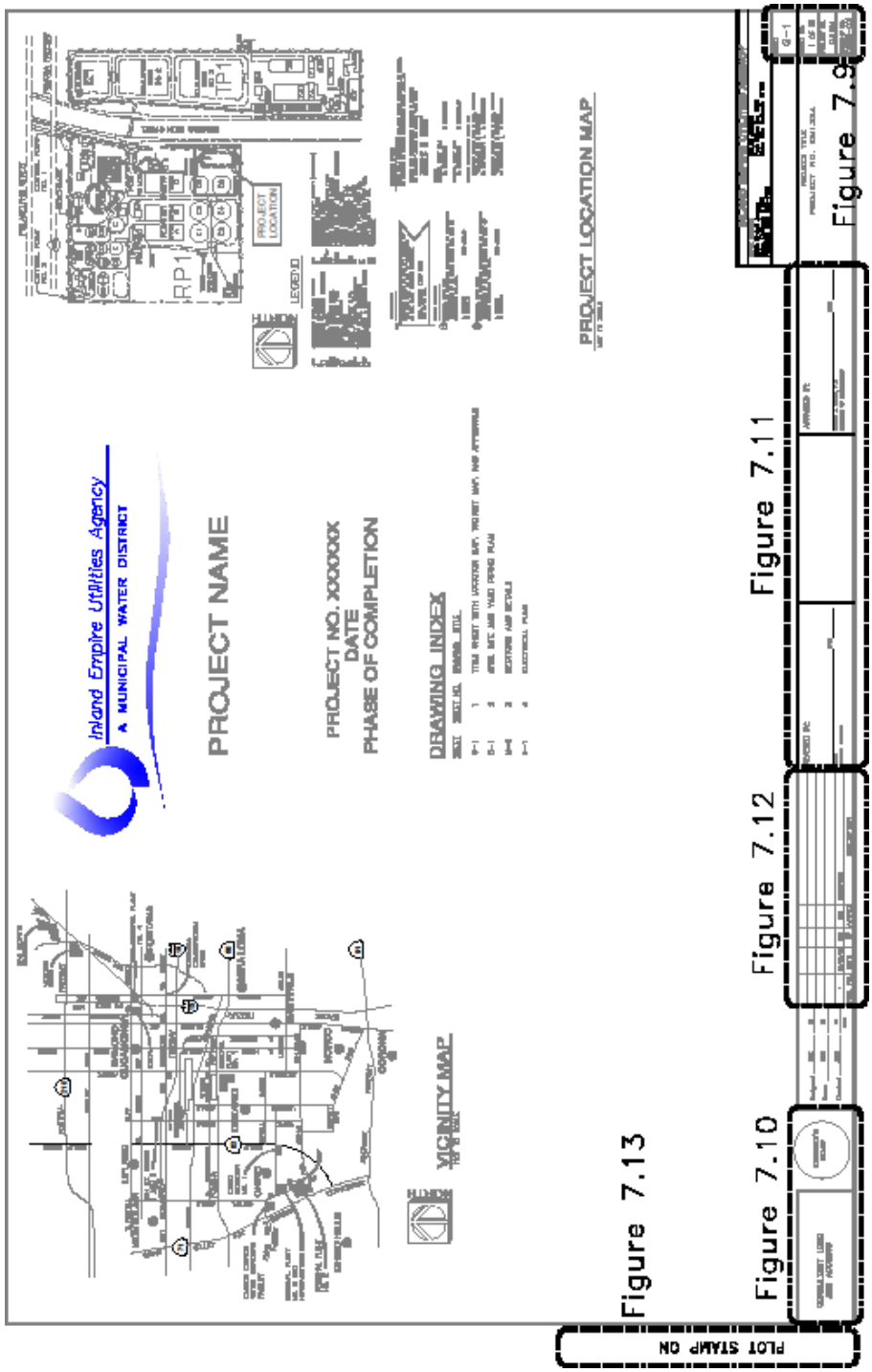
Inland Empire Utilities Agency
A MUNICIPAL WATER DISTRICT
PROJECT NAME
PROJECT NO. XXXXXX
DATE
PHASE OF COMPLETION
DRAWING INDEX
PROJECT LOCATION MAP
VICINITY MAP
Figure 7.9
Figure 7.11
Figure 7.12
Figure 7.10
Figure 7.13
PLOT STAMP ON

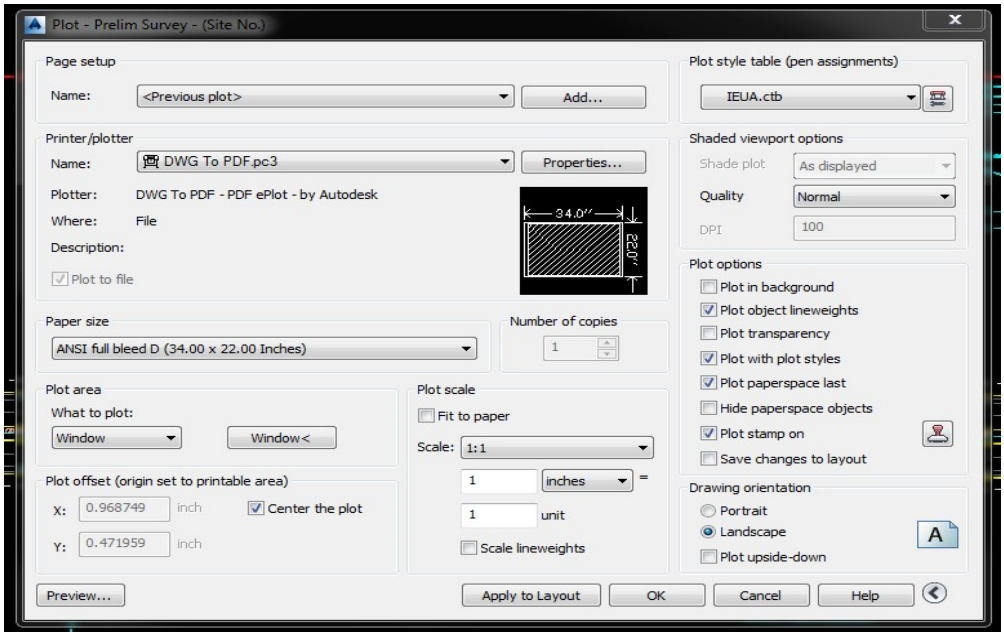

PLOTTING FROM AUTO CAD TO 22” X 34” HARD COPY:

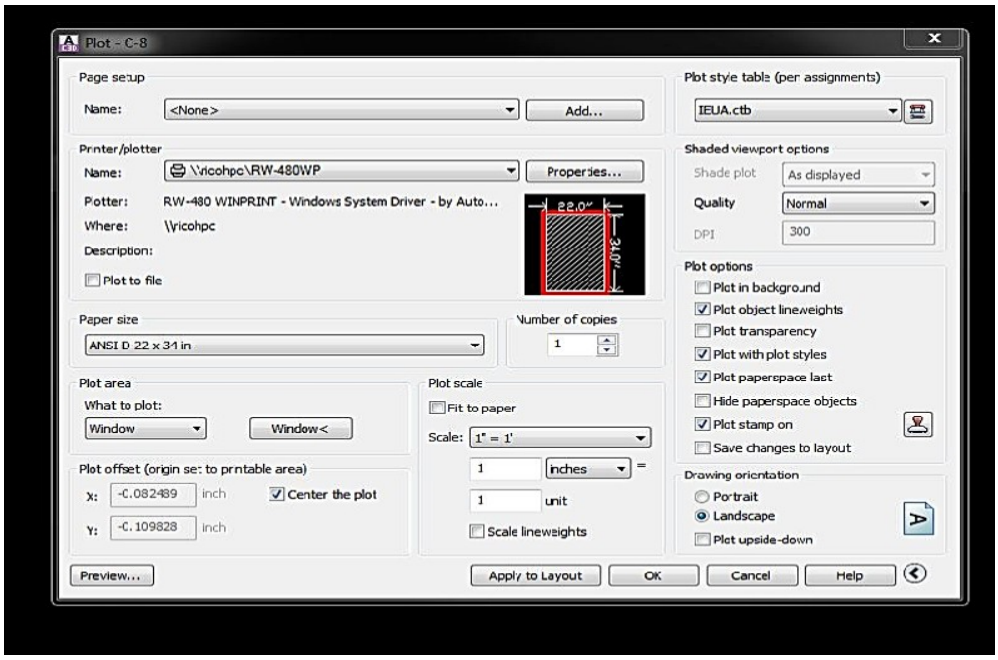

OPTIONAL HALF SIZE PLOT

PLOTTING FROM AUTO CAD TO 11” X 17” HARD COPY:

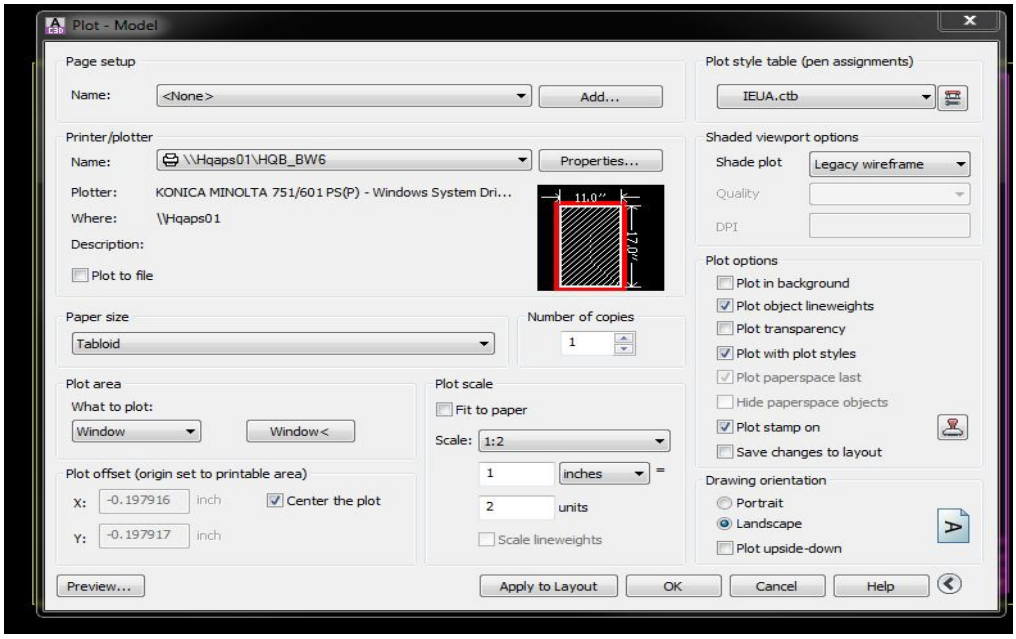

PLOTTING FROM AUTO CAD TO 11”X17” PDF:

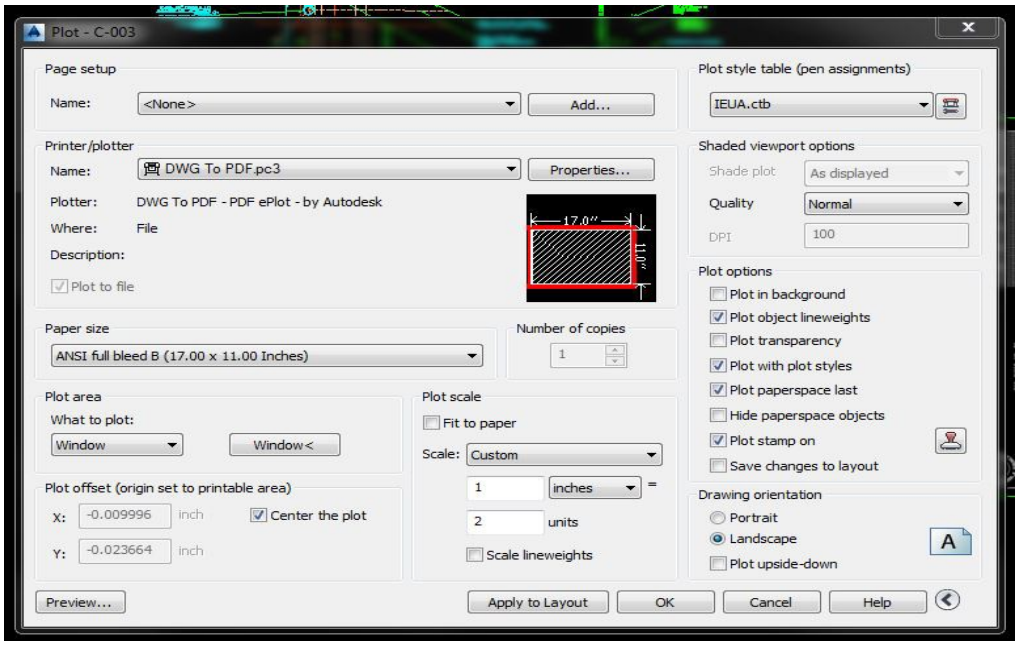

DRAWING SET ORGANIZATION

TABLE OF CONTENTS PAGE

DRAWING SET ORGANIZATION 61
SET SHEET SEQUENCE 62

DRAWING SET ORGANIZATION

This chapter details IEUA's system for organizing a set of drawings. The organization of a drawing set is designed to support the requirements and facilitate the production efforts of the design and construction team. The following methodology is used:

- Segregate the information by discipline (both design and construction) to form subsets of the total drawing package.
- Order the subsets to correspond to the natural sequence of construction, closely associating disciplines where topics are similar.
- Collect and present each drawing (plan, elevation, section, etc.) on a sheet dedicated to that drawing type.
- Present information within each subset from general to specific.

SET SHEET SEQUENCE

Following the cover sheet, sheets should be organized into subsets by discipline in the order illustrated in Figure 8-1. All of the subsets (discipline) may not apply, or more specific additional categories may be required depending on the size, scope and complexity of the project. The Landscape plan for each discipline shall be the last drawing within the discipline.

See Chapter 5 for letter description sheets identification.

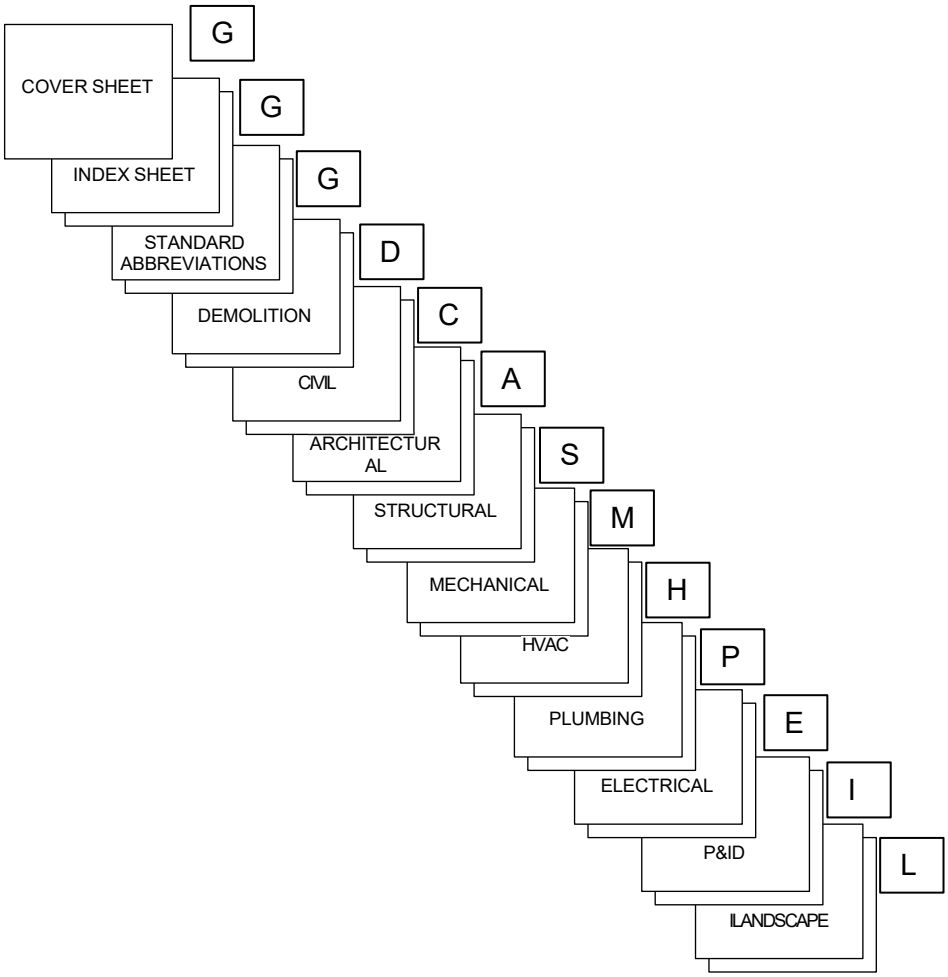

Figure 8-1

DELIVERABLES AND DATA EXCHANGE

TABLE OF CONTENTS PAGE

DELIVERY MEDIA 64
DATA FORMAT 65
CAD Files 65
PDF Files 65
DOCUMENTATION 66

This chapter describes the standard deliverables and data exchange formats required to exchange digital data (drawing files and database information) between IEUA and consultants.

DELIVERY MEDIA

Digital media shall be delivered according to Table 9-1

Table 9-1

Submittal	Media
Preliminary Design Report (30% Design)	FTP Site Folder and Flash Drive
60% Submittal	
90% Submittal	
100% Submittal	
Conformed Drawings	
Record Drawings	

When digital media are exchanged, an external label must contain, at a minimum, the following information:

- Project number
- Project title
- Submittal date
- Format and version (e.g., Auto CAD Version, and PDF-format on FTP site and Flash Drive) of the operating system on which the media was created, as.
- A short description of contents.

In addition, a transmittal sheet must accompany the media containing, at a minimum, the following information:

- List of filenames and file descriptions on each media.
- Instructions for restoring/transferring the files from the media.
- Certification that all delivery media is free of known viruses, including the name of the virus scanning software used and the date the virus scan was performed.

DATA FORMAT

All files necessary to produce the drawing set (base maps, project model files, Xrefs, plot styles, etc.) are to be delivered in both native CAD format and in PDF format according to the Engineering Design Guidelines and the Scope of Work.

CAD Files

All CAD files shall be delivered in a format that is directly readable and compatible with the Agency's CAD environment, as described in Chapter 2, page 6, Section CAD, and without conversion. Before a file is placed on the delivery media, the following procedures must be performed:

- Remove all extraneous graphics outside the border area and set the active parameters to a standard setting or those in the seed/prototype file.
- Make sure all reference (external reference) files are attached with the appropriate project name variable and do not use device or directory specifications.
- Compress or purge all files using the appropriate utility. A digital media copy of the decompression utility should be provided with the deliverable media, if appropriate.
- Include all files, both graphic and nongraphic, required for the project (e.g., plot styles, color tables, pen tables, font libraries, cell/block libraries, user command files, plot files, etc.)
- Make sure that all support files such as those listed above are in the same directory and that references to those files do not include device or directory specifications.
- Include all standard sheets (i.e. abbreviation sheets, standard symbol sheets, etc.) necessary for a complete project set.

PDF Files

All PDS files shall be delivered in a format that is directly readable and compatible with the Agency's PDS environment. Before a file is placed on the delivery media, the following procedures must be performed:

- Compress Design File to remove all the elements from the undo/redo buffer and all items marked for deletion in the design file.
- File Design to save the parameters defined within the current session.
- Propagate all design files. Drawings must propagate without errors and minimal warnings.
- Provide PDF report "Drawing Index for Active Project". This report contains drawing number, drawing title, file name, process area number and modification status for the currently active PDF project.
- Image size at least 5000 pixels, resolution at least 150, document size 34 x 22 square inches. **No exceptions**.
- All PDF documents should incorporate bookmarks within the document.

DOCUMENTATION

Unless otherwise specified in the project scope of work, the following media types will be submitted with the appropriate submittal as listed in Table 9-2

Table 9-2		
Submittal	**CAD Files**	**PDF**
Preliminary Design Report	X	X
30% Submittal	X	X
60% Submittal	X	X
90% Submittal	X	X
100% Submittal	X	X
Conformed Drawings (per Project Manager request)	X	X
Record Drawings (per Project Manager request)	X	X

Hardcopy media types must meet the following specifications:

- 60% Submittal CAD files for IEUA to review CAD standard and QC.
- Submittal PDF shall be in project folder 50.6 Design and the stages of submittal.
- After IEUA receives final CAD files, all previous versions shall be moved to folder: Old.

CAD STANDARD IMPLEMENTATION TOOLS

TABLE OF CONTENTS PAGE

AUTO CAD TEMPLATES 68
AUTOCAD BATCH STANDARDS CHECKER 68
MASKING TECHNIQUE TO BLOCK OUT AREAS AND TEXT 69

IEUA recognizes the need for customized shortcuts or utilities to facilitate efficient production of architectural and engineering CAD documents. To meet this demand, IEUA has developed standard files. These files consist of:

AUTOCAD TEMPLATES

A template file contains standard settings. When several files need to be created that use the same conventions and default settings, a customized template file can be used instead of specifying the conventions and default settings each time you start a new file. IEUA has created several discipline specific template files. These files have the following conventions and settings included:

- Unit type and precision
- Title blocks, borders, and logos
- Layer names
- Text styles

Template files have a .dwt file extension and are included in the IEUA CAD Standards folder.

AUTOCAD BATCH STANDARDS CHECKER

The Batch Standards Checker audits a series of drawings for standards violations and creates an XML-based summary report detailing all violations. To use the Batch Standards Checker, a series of standards files that define a set of common properties for named objects such as layers and text styles are required. IEUA has created several discipline specific standards files based on the templates described in Section 0, *AUTOCAD TEMPLATES*.

Standards files have a .dws file extension and are included in the IEUA CAD Standards folder.

MASKING TECHNIQUE TO BLOCK OUT AREAS AND TEXT

Use masks to block out areas of a surface and prevent them from being displayed or to render a section of the surface using a specified render material are **discouraged**. However, if things be high blocking need to be delete or correction, please fix the background areas to correct manor.

Due to the unstable of reproduction hard copies from submittal PDFs, when masking technique involved. IEUA no longer provide set of hard copies to public, only set of PDF will be provided VIA website to different agencies and clients.

Use a background mask for Text and Referenced Text components to mask the background of a label component. Exceptional when contour line grade elevation needed to be shown as example below.

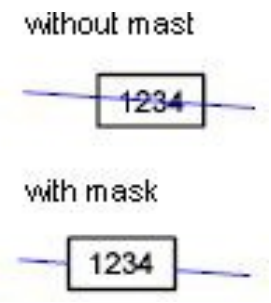

INSTRUMENTATION AND CONTROL

TABLE OF CONTENTS PAGE

LEGEND AND SYMBOLS 71
PRIMARY ELEMENT SYMBOLS 73
MISCELLANEOUS SYMBOLS 74
LINE SYMBOLS 75
DRAWING/AREA CONNECTOR 76
SUMMARY OF INSTRUMENT TYPE & LOCATION 77

LEGEND AND SYMBOLS

All symbols will be provided to a Consultant by the Agency's CAD Designer.

<u>FOR INTERNAL USE ONLY</u> : Symbols library is located (LINK)

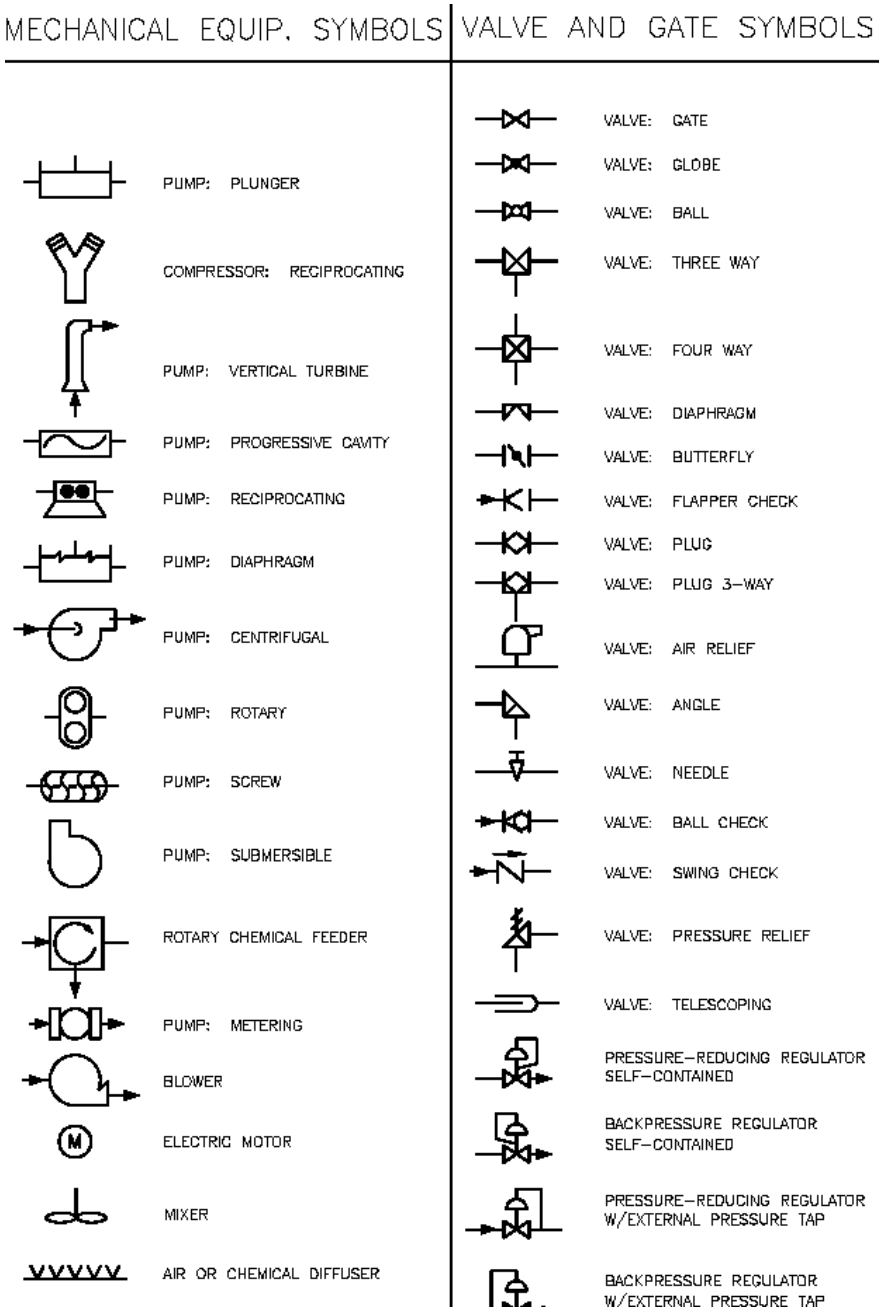

VALVE AND GATE ACTUATOR SYMBOLS

DIAPHRAGM

CYLINDER

SOLENOID

ELECTRIC MOTOR

ELECTROHYDRAULIC

ACTUATOR WITH MANUAL RESET

ACTUATOR WITH POSITIONER

THE FOLLOWING ADDITIONAL DESIGNATIONS MAY BE UTILIZED ADJACENT TO SOME VALVE OR GATE SYMBOLS.

FC	FAILS CLOSED
FIP	FAILS IN LAST POSITION
FO	FAILS OPEN
LC	LOCKS CLOSED
LO	LOCKS OPEN
NC	NORMALLY CLOSED
NO	NORMALLY OPEN

PRIMARY ELEMENT SYMBOLS

BUBBLER TUBE
BUBBLER ASSEMBLY

LEVEL PROBE

ORIFICE PLATE

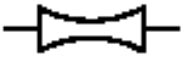

VENTURI TUBE

FLUME

WEIR

PROPELLER (P) OR
TURBINE (T) METER

AVERAGING PITOT TUBE

MAGNETIC FLOWMETER

THERMAL FLOWMETER

SONIC FLOWMETER

ULTRASONIC LEVEL METER

ROTAMETER

FLOAT TYPE LEVEL SWITCH

MISCELLANEOUS SYMBOLS

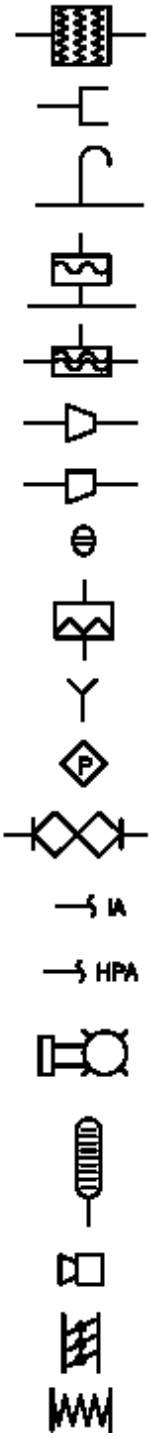

FILTER

AIR–HIGH PRESSURE QUICK CONNECTION

AIR VENT

CHEMICAL SEAL – DIAPHRAGM

CHEMICAL SEAL – ANNULAR

REDUCER – CONCENTRIC

REDUCER – ECCENTRIC

PULSATION DAMPENER

RUPTURE DISK

DRAIN

PURGE ASSEMBLY

IN–LINE STATIC MIXER

FIELD DEVICE
INSTRUMENT AIR SUPPLY

FIELD DEVICE
HIGH PRESSURE AIR SUPPLY

ROTATING BEACON

CALIBRATION COLUMN

HORN

DAMPERS, VANES

EXPANSION JOINT

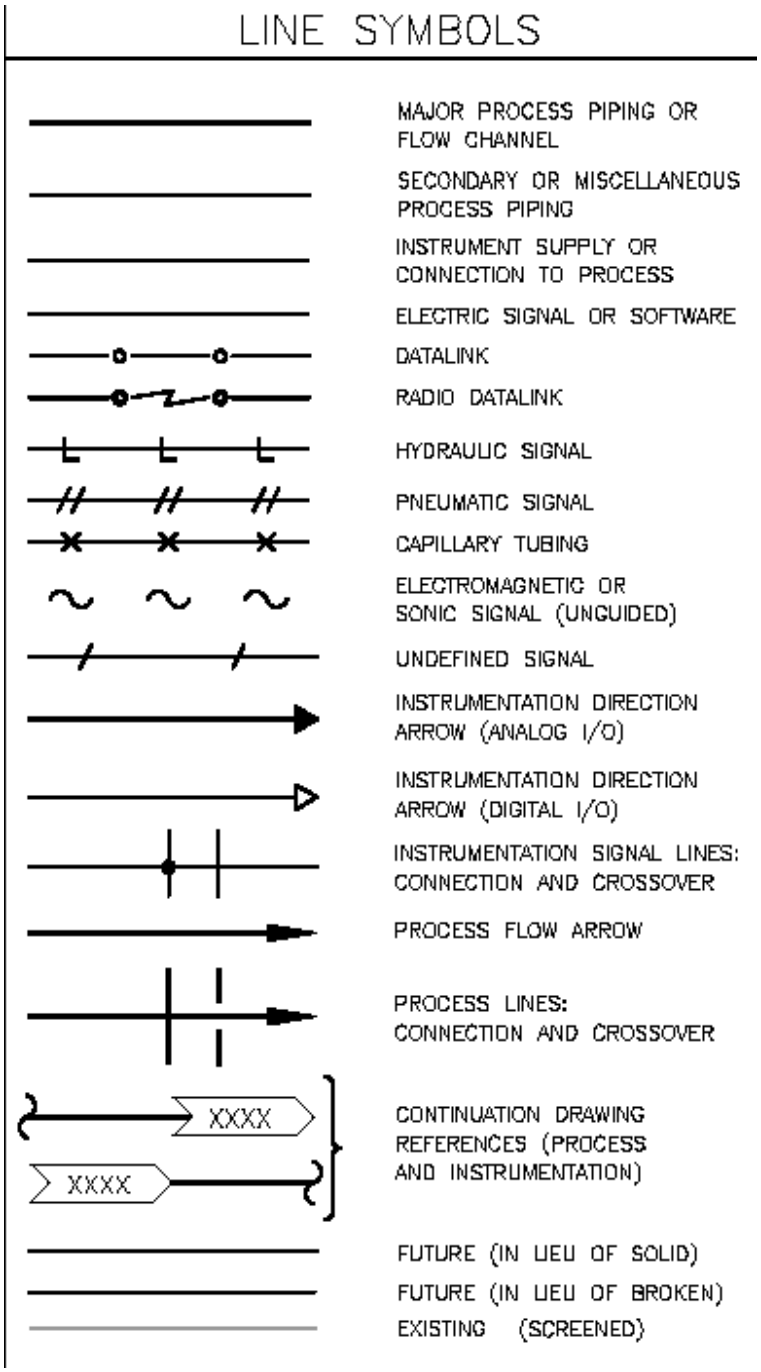
LINE SYMBOLS
MAJOR PROCESS PIPING OR FLOW CHANNEL
SECONDARY OR MISCELLANEOUS PROCESS PIPING
INSTRUMENT SUPPLY OR CONNECTION TO PROCESS
ELECTRIC SIGNAL OR SOFTWARE
DATALINK
RADIO DATALINK
HYDRAULIC SIGNAL
PNEUMATIC SIGNAL
CAPILLARY TUBING
ELECTROMAGNETIC OR SONIC SIGNAL (UNGUIDED)
UNDEFINED SIGNAL
INSTRUMENTATION DIRECTION ARROW (ANALOG I/O)
INSTRUMENTATION DIRECTION ARROW (DIGITAL I/O)
INSTRUMENTATION SIGNAL LINES: CONNECTION AND CROSSOVER
PROCESS FLOW ARROW
PROCESS LINES: CONNECTION AND CROSSOVER
XXXX
XXXX
CONTINUATION DRAWING REFERENCES (PROCESS AND INSTRUMENTATION)
FUTURE (IN LIEU OF SOLID)
FUTURE (IN LIEU OF BROKEN)
EXISTING (SCREENED)

DRAWING/AREA CONNECTOR

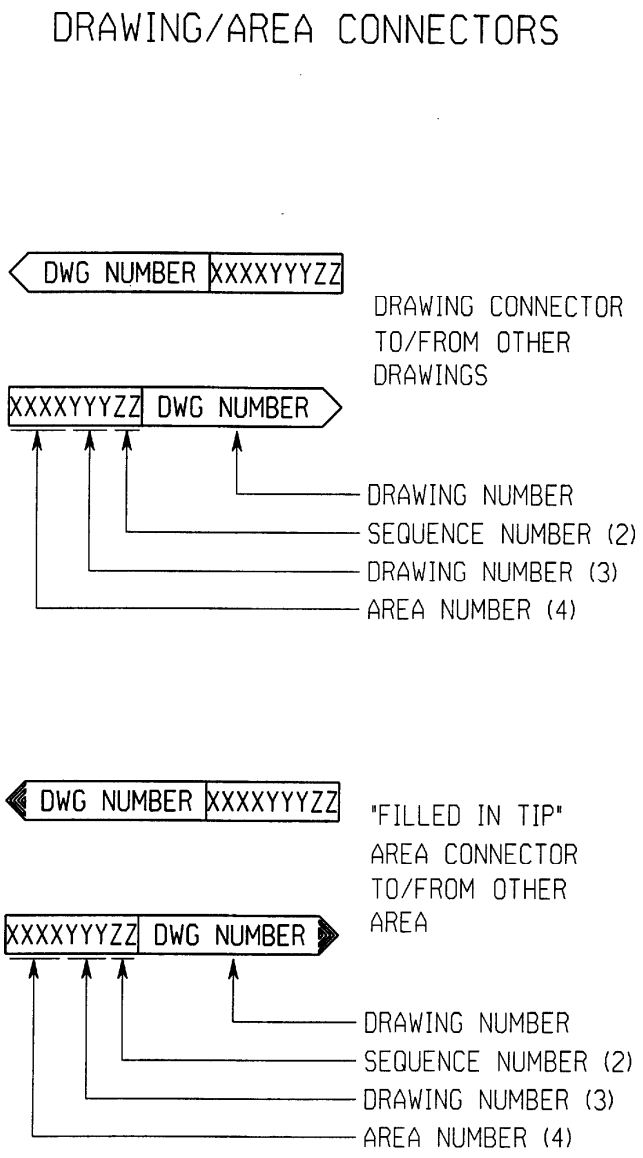

Summary of instrument type & location

	Accessible to the Operator; Primary Location on the Main Control Panel	Mounted in the Field	Not Normally Accessible to Operator, Behind the Panel
Distinct Elements	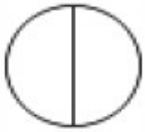	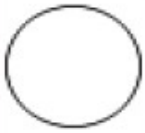	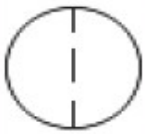
Shared Display Shared Control in Distributed Control System			
Computer Logic Function			
Programmable Logic Control			

SAMPLE DRAWINGS

TABLE OF CONTENTS PAGE

CONSULTANT BORDER 79
IN-HOUSE BORDER 80
PLAN, SECTION, AND DETAIL IDENTIFICATION 81
NORTH ARROW AND KEY NOTE DETAILS 82
FACILITIES LEGEND 83
PIPE AND PIPE FITTINGS SYMBOLS 84

CONSULTANT BORDER

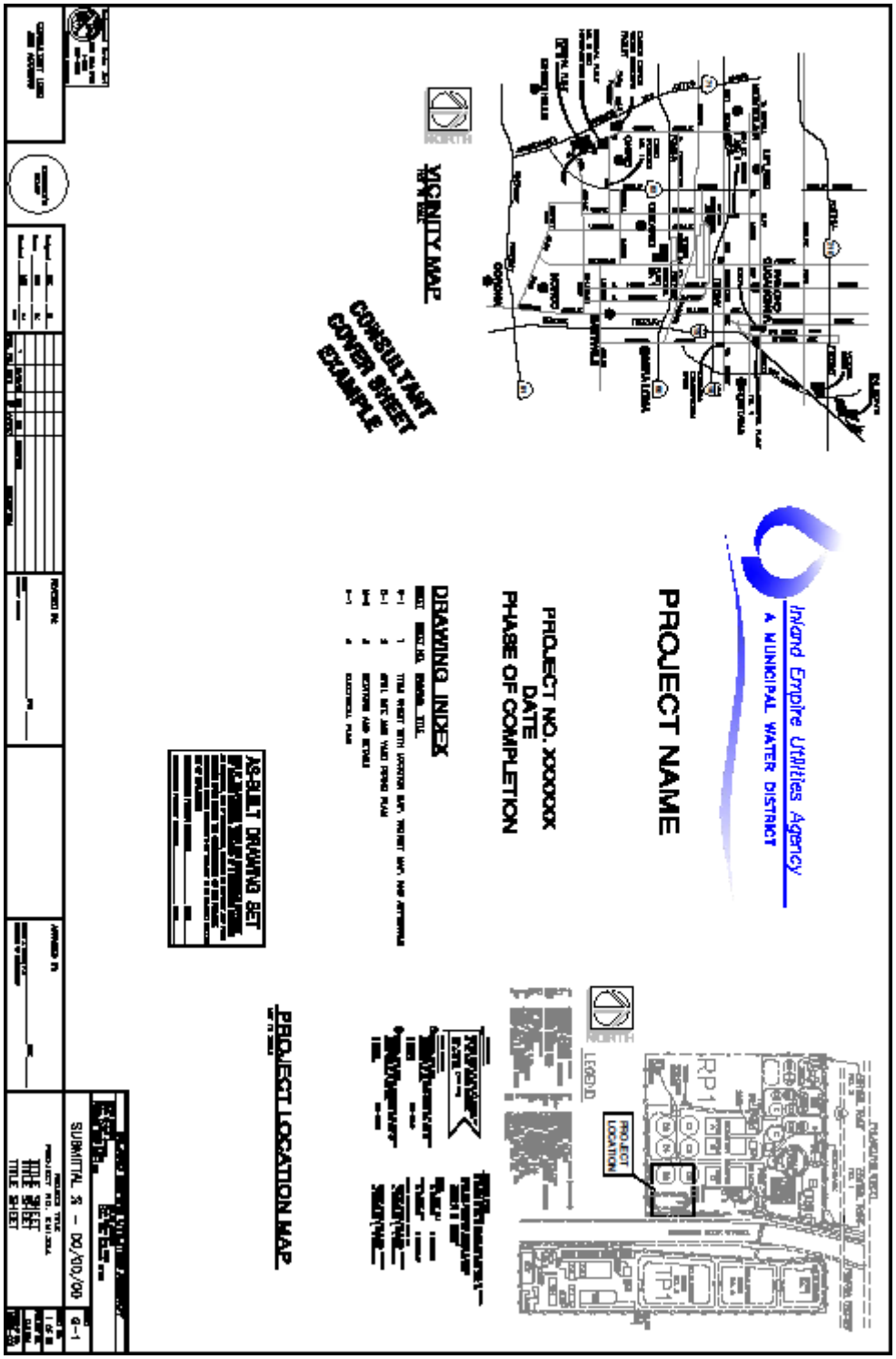

IN-HOUSE BORDER

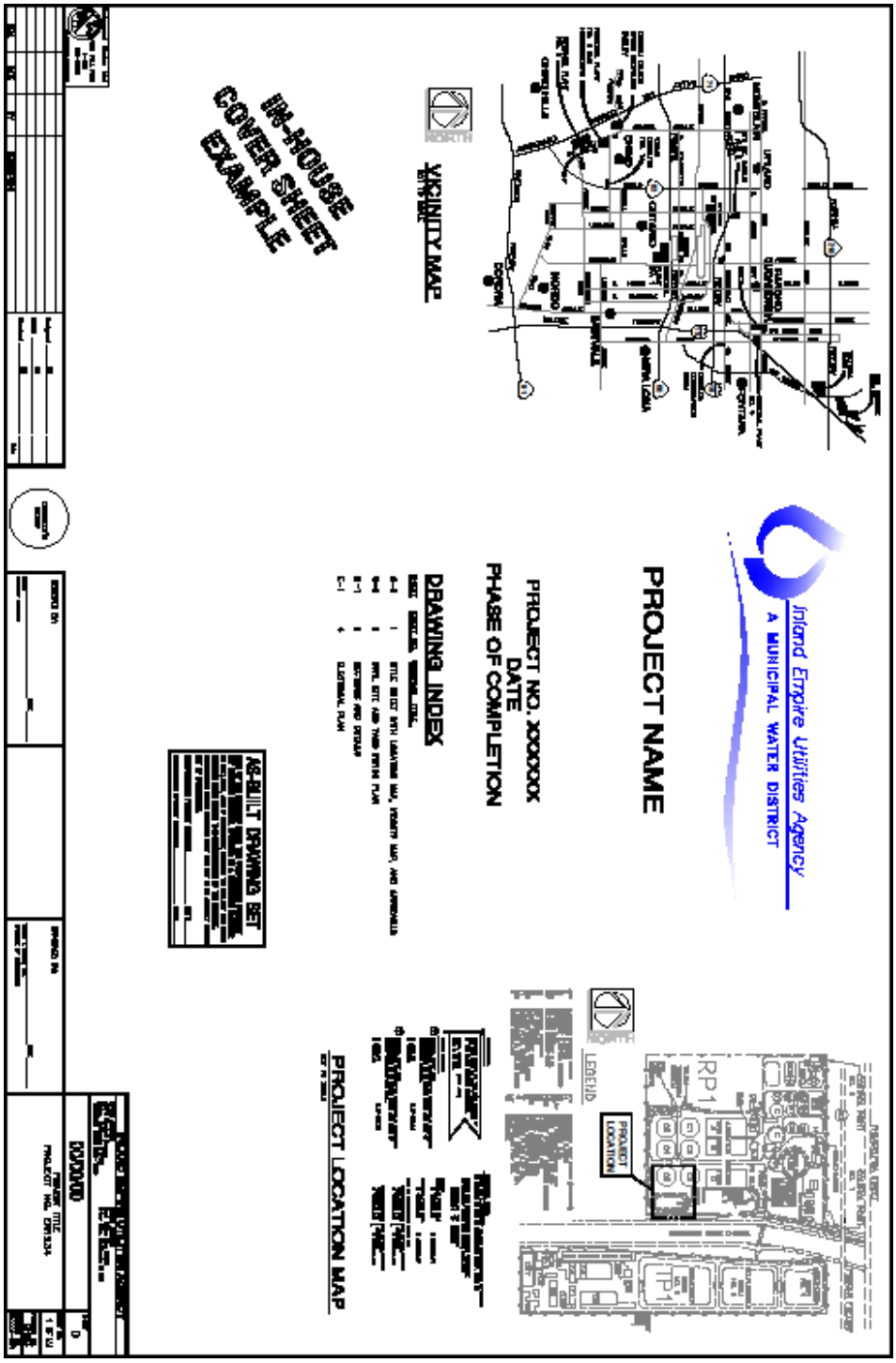

PLAN, SECTION, AND DETAIL IDENTIFICATION

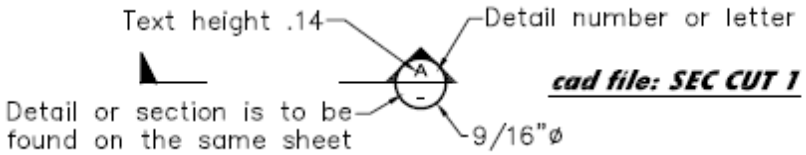

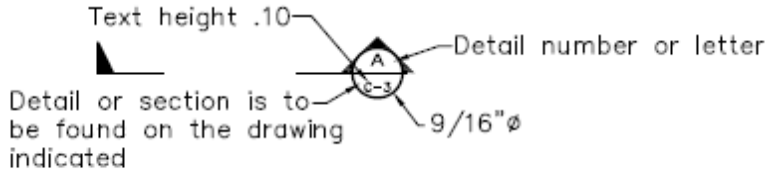

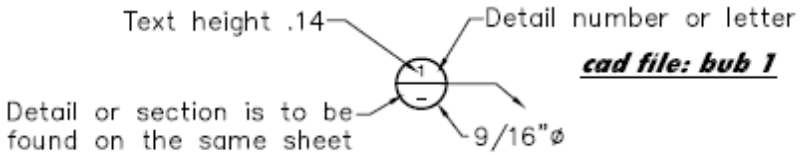

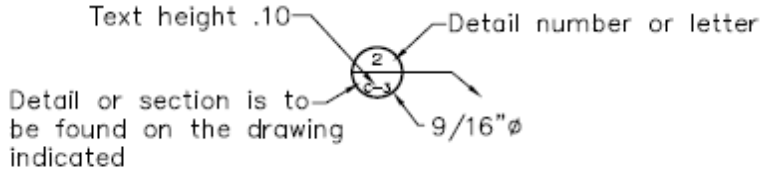

AT CROSS REFERENCE

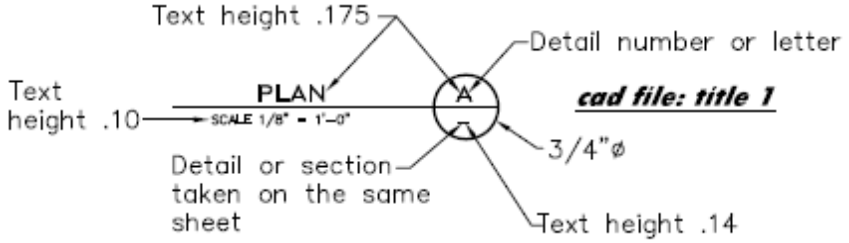

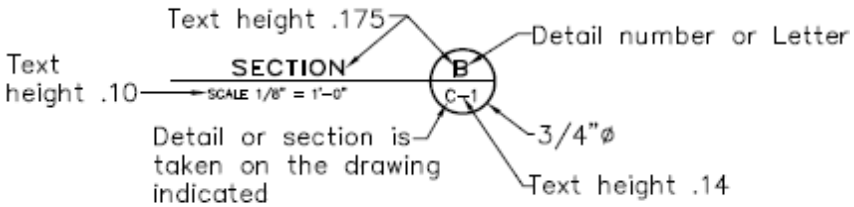

AT TITLE

North Arrow And Key Note Details

cad file: IEUA-NORTH-ARROW

IEUA north arrow symbol

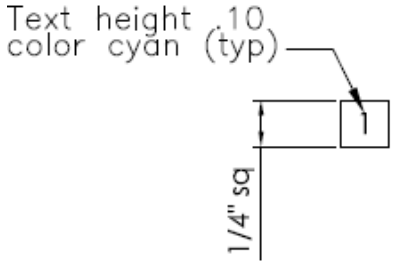

cad file: COOR KEY NOTE

Coordinate control data key note

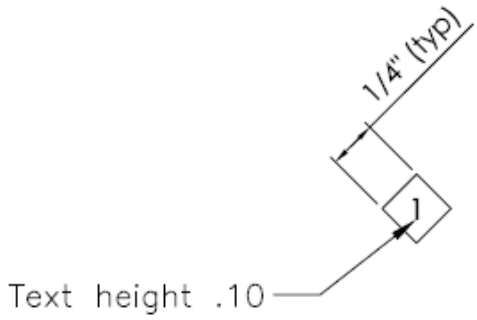

cad file: KEY NOTE 1

Key note

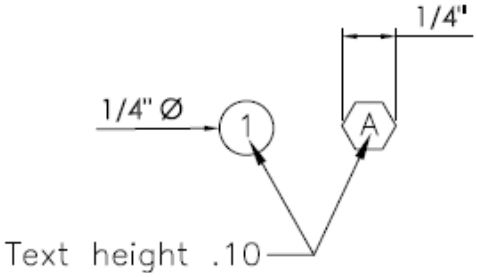

cad file: COLUMN KEY NOTE 1

Column key notes

FACILITIES LEGEND

EXISTING FACILITIES

- A.C. PAVEMENT
- BUILDING OR STRUCTURE – HATCHING DENOTES IF DEMOLITION OCCURS – ALSO APPLIES TO ALL MECHANICAL EQUIPMENT TO BE DEMOLISHED
- CONCRETE CURB, PAVEMENT, WALKWAY OR WALL
- CONCRETE RETAINING WALL
- 3:1 — EXISTING EMBANKMENT – SLOPE AS INDICATED
- DRAINAGE WAY OR DITCH
- 815 — CONTOUR LINE
- x 821.50 — SPOT ELEVATION
- EXIST. 3" UW (DI) (optional text in box) — PIPELINE IDENTIFICATION BOX–DENOTES SIZE, TYPE AND MATERIAL OF PIPELINE
- ABOVE GROUND PIPING–CIVIL PLANS ONLY–SEE PIPELINE CALLOUT FOR SIZE & TYPE
- BELOW GROUND PIPING–CIVIL PLANS ONLY–SEE PIPELINE CALLOUT FOR SIZE & TYPE

FACILITIES TO BE CONSTRUCTED

- A.C. PAVEMENT
- BUILDING OR STRUCTURE
- CONCRETE CURB, PAVEMENT, WALKWAY, WALL OR VALLEY GUTTER–SEE PLANS FOR EXACT DESCRIPTION
- CONCRETE RETAINING WALL
- 3:1 — NEW EMBANKMENT – SLOPE AS INDICATED
- DRAINAGE WAY OR DITCH
- 815 — CONTOUR LINE
- 821.50 — SPOT ELEVATION
- NEW 6" UW (DI) (optional text in box) — PIPELINE IDENTIFICATION BOX–DENOTES SIZE, TYPE AND MATERIAL OF PIPELINE
- ABOVE GROUND PIPING–CIVIL PLANS ONLY–SEE PIPELINE CALLOUT FOR SIZE, TYPE AND MATERIAL
- BELOW GROUND PIPING–CIVIL PLANS ONLY–SEE PIPELINE CALLOUT FOR SIZE, TYPE AND MATERIAL

PIPE AND PIPE FITTING SYMBOLS

DOUBLE LINE PIPING

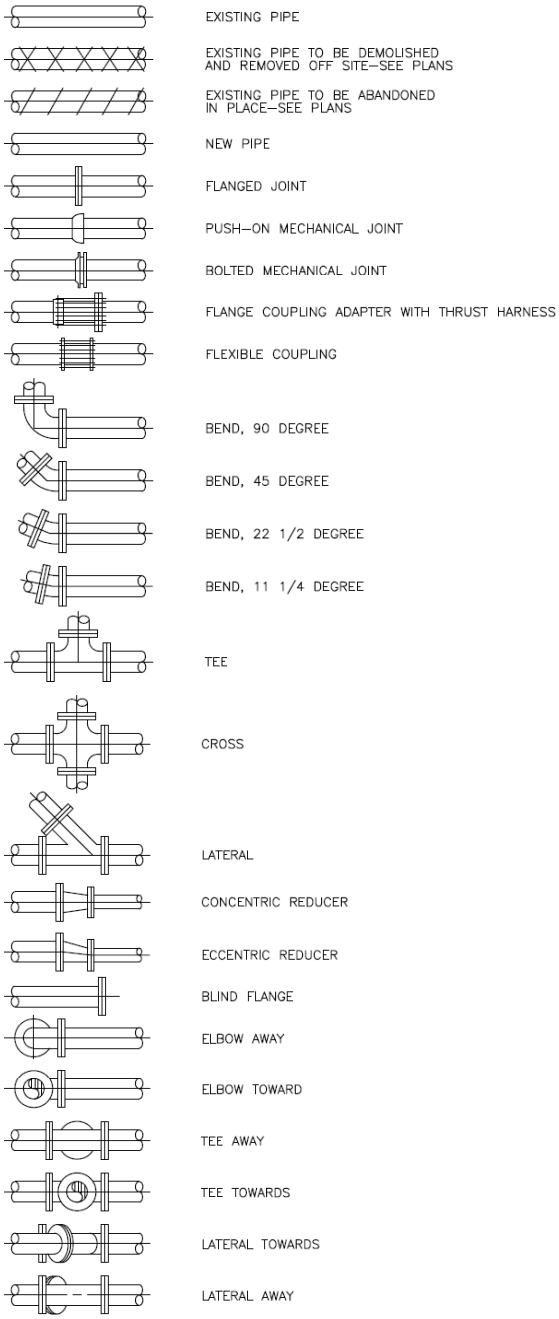

SINGLE LINE PIPING

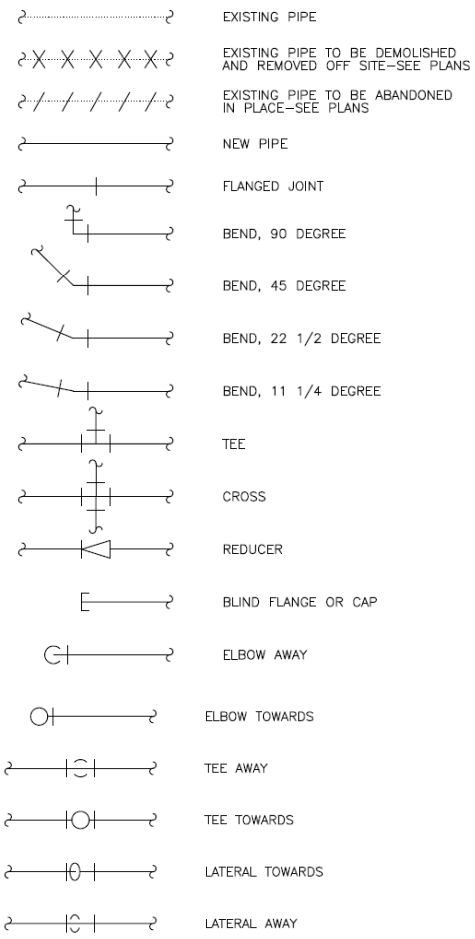

PIPING DESIGNATION

EXAMPLE:

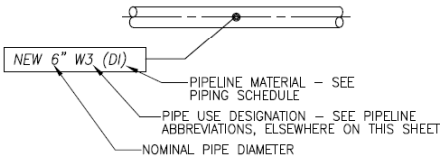

PIPE AND FITTING PATTERNS

B	BELL	MJ	MECHANICAL JOINT
F	FLANGE	PE	PLAIN END
GE	GROOVED END	S	SPIGOT

EXAMPLE:

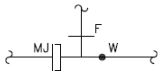

ADDENDUM, CONFORMED, RECORD, AND AS-BUILT DRAWINGS

TABLE OF CONTENTS PAGE

ADDENDUM DRAWINGS 86
CONFORMED DRAWINGS 86
RECORD DRAWINGS 86
AS-BUILT DRAWINGS 86
EXAMPLE ADENDUM DRAWING 88
EXAMPLE CONFORMED DRAWING 89
EXAMPLE RECORD DRAWING 90
EXAMPLE AS-BUILT DRAWING 91

See Cad Specifications

EXAMPLE ADDENDUM DRAWING

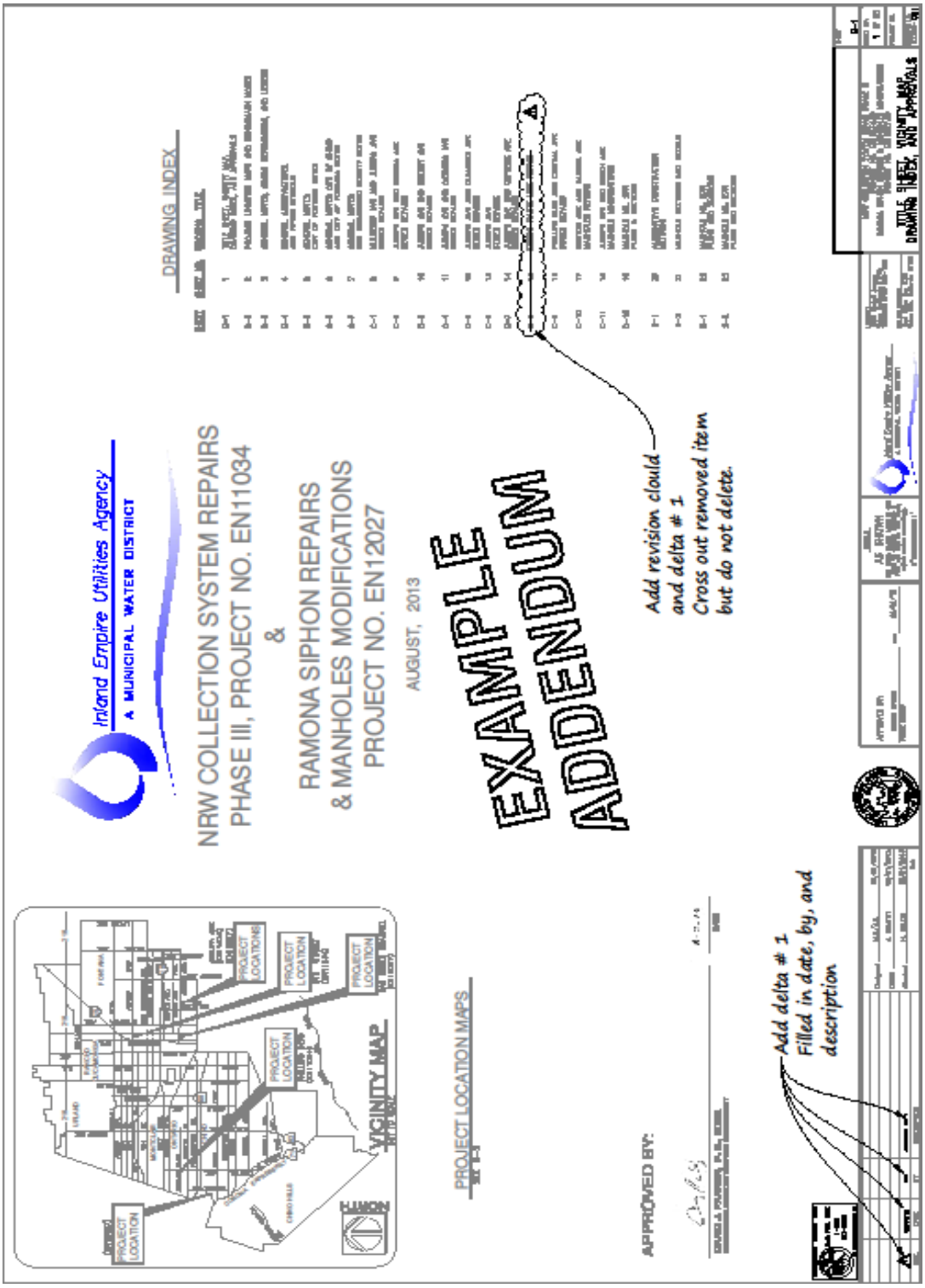

EXAMPLE CONFORMED DRAWING

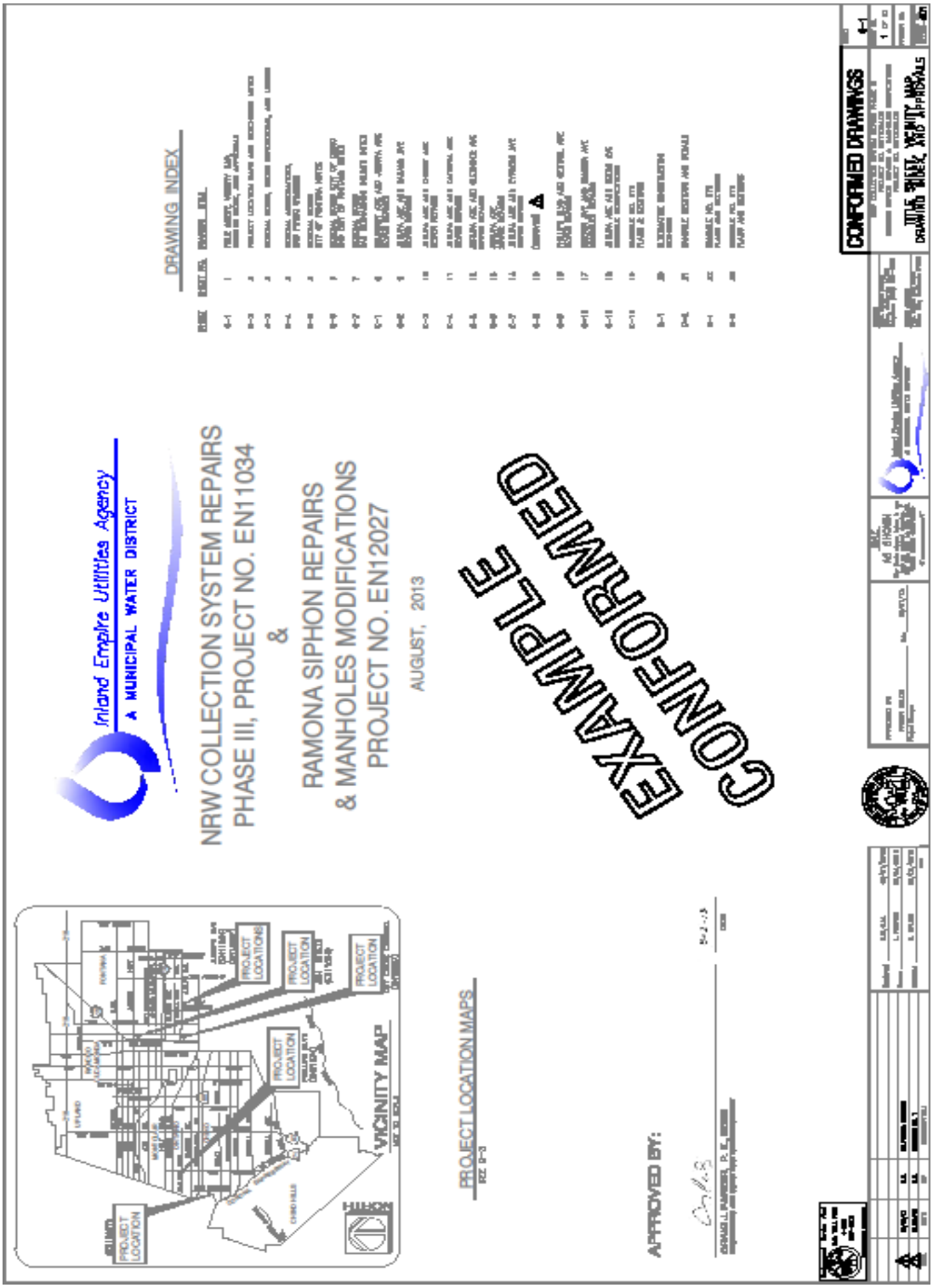

EXAMPLE AS-BUILT DRAWING

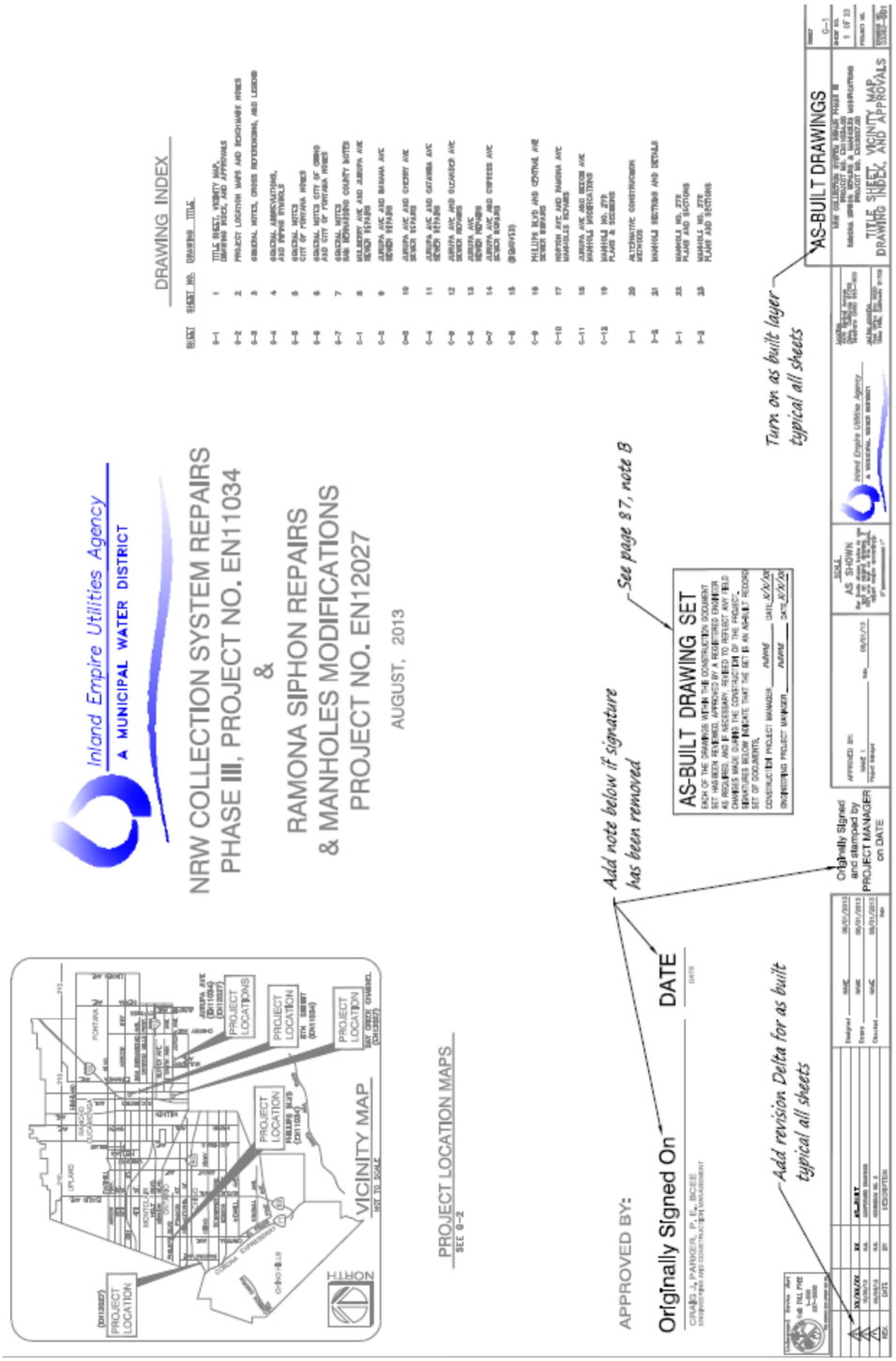

Inland Empire Utilities Agency
A MUNICIPAL WATER DISTRICT

GA.6. Unit Process Control Procedure and Standard Operating Procedure Samples

GA.6. Unit Process Control Procedure and Standard Operating Procedure Samples

Attachment No. 1

IEUA
UNIT PROCESS CONTROL PROCEDURE (UPCP))
FORMAT STANDARDIZATION

Attachment 1 includes the standardized format for preparing unit process systems and sub-system UPCP's.

The numbering protocol for each UPCP shall be as follows:

Plant Area
Plant Number **SOP Number**

SOP No: XXXX-XXX-XXX

Plant Number		**Plant Area**	
Regional Plant No. 1	**0151**	**Preliminary Treatment**	**100**
Regional Plant No.2	**0180**	**Primary Treatment**	**200**
Carbon Canyon Water Recycling Facility	**0152**	**Secondary Treatment**	**300**
Regional Plant No.5	**0154**	**Tertiary Treatment**	**400**
		Odor Control System	**500**
		Auxiliary System	**600**
		Solids Treatment	**700**
		Solids Dewatering System	**800**
		Energy Management	**900**

The format of the UPCP is intended to be simple to read, straight forward, consistent with all procedure write-ups, and have pictures or schematics for explanation. The heading is simple with the procedure type, name, and date issued. This is followed by a signature area to show that this procedure has been approved for use.

Eight headings are shown to give consistent, organized information in preparation of completing the procedure. These heading are:

- DESCRIPTION: A brief unit process or system design operational intent description, including a process flow diagram along with a table describing the individual unit process component capacities.

- PROCESS OBJECTIVE: List the unit process or system operational goals.

- PROCESS OPERATING STRATEGY: Describe the unit process or system operational methods needed to achieve the Process Objective.

- KEY CONTROL VARIABLES: List the individual unit process or system operational treatment parameters that can be manipulated to control the effectiveness of the process or system operation.

- PROCESS CONTROL PARAMETERS AND KEY PERFORMANCE INDICATORS: Identify the parameters that should be used as an indicator for the quality of unit process or system operation performance, and define their optimal operating target or range.

- PROCESS TROUBLESHOOTING: Develop general troubleshooting guidelines relative to detection of operational performance problems and measures for correction.

- REFERENCES:

INLAND EMPIRE UTILITIES AGENCY	UPCP 0153-100-001 Operation of Preliminary Treatment Rev 3.0 – Nov 23, 2009

1.0 Description

The preliminary treatment system removes large plastic and other debris from the wastewater – these are referred to as screenings, and also grit and other inorganic material prior to further treatment. Preliminary treatment at RP-4 is performed by two influent bar screens operating in a duty/standby configuration. Screenings are conveyed into a bin for disposal. Screened wastewater is then lifted into the headworks with a combination of 8 influent pumps. The headworks include two vortex grit removal systems operating in duty/duty configuration and bypass channels for the maintenance of vortex units. Grit is pumped from the two grit removal systems to grit classifiers and dewatering screws and then disposed in bins.

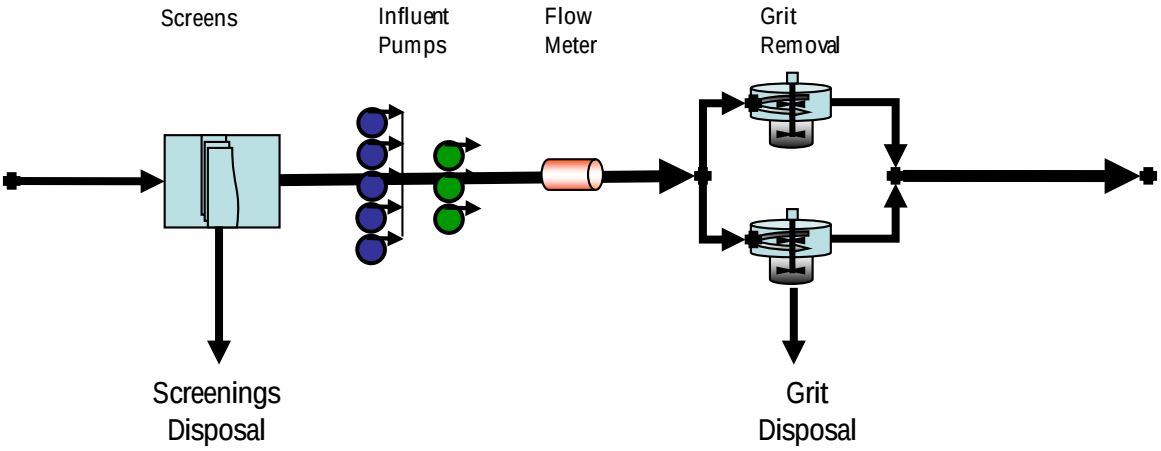

Figure 1 – Preliminary Treatment Process Schematic

Table 1 – Preliminary Treatment Components		
TAG #	**Description**	**Capacity**
SCR1	Influent Screens 1	36.2 mgd
SCR2	Influent Screens 1	36.2 mgd
CON1	Screening Conveyor	32 ft^3/hr
COM1	Screening Compactor	32 ft^3/hr
P1 – P5	Influent Pumps 1 – 5	3,275 gpm @ 38 ft TDH
P6 – P8	Influent Pumps 6 - 8	6,000 gpm @ 44 ft TDH
FIT-1101	Influent Flow Meter	0 – 32 mgd
LIT-1101	Influent Wet well Level 1	Operating Range -
LIT-1102	Influent Wet well Level 2	Operating Range -

	Grit Pumps 1, 2	250 gpm at 30' TDH
P-1240	Grit Pump 3	250 gpm at 30' TDH
	Grit Concentrator and Classifier #1	250 gpm
DWS-1270	Grit Concentration and Classifier #2	250 gpm
	Grit Basin #1	20 mgd
GRB-1210	Grit Basin #2	20 mgd

2.0 Process Objective

Successful operation of the preliminary treatment system is measured in routine removal of screenings and grit, and maintenance of the influent wet well level within the operator set point range.

3.0 Process Operating Strategy

1. Influent screens remove large objects and other debris from the influent to protect the influent pumps and downstream equipment.
2. Influent pumps are controlled to maintain a constant wet well level.
3. Influent pumps are controlled to limit flow to a maximum permitted for Title 22 compliance.
4. Grit is removed from the influent to reduce maintenance on downstream mechanical systems.

4.0 Key Control Variables

The following are key control variables for operation of the preliminary treatment system:

a) Cycle time between bar screen rake operations
b) Wet well Control Level set point elevation.
c) Influent Pump cycling order
d) Time between stopping/starting influent pump
e) Time period between the beginning of one degritting cycle and the beginning of the next cycle
f) Duration of Grit Pump operation
g) Grit basin flushing valve operation time delay
h) The grit pump time delay following opening of the flushing water valve
i) The grit classifier adjustable time delay (0-120 seconds) following shut down of the grit pump.
j) The grit pumps are interlocked to ensure both grit pumps are not operating during the same time period.

5.0 Process Control Parameters and Key Performance Indicators

Table 2 – Process Control Parameters and Key Performance Indicators

Control Parameter	Acceptable Target/Range	KPI	Comments
Influent wet well level	0 – 1.5 ft above and below the set point		Control of the wet well is critical to ensure reliable operation of the sewer collection system.

Screenings Removed	1 – 3 bins per week	3-5 bins per week = 5 ft^3/mg Typical 7[1] ft^3/mg	Screenings will vary in moisture content
Grit Removed	1 – 3 bins per week	2 bins per week = 2.5 ft^3/mg (Typical 2[2] ft^3/mg)	Grit will vary in moisture content with a minimum amount of organic material.

6.0 Process Troubleshooting (All inspections identified below must be done in the field local to the unit process or equipment item, not on the HMI)

[1] Metcalf and Eddy, 4th Edition. Wastewater Engineering. Treatment and Reuse. Pg 329

[2] Metcalf and Eddy, 4th Edition. Wastewater Engineering. Treatment and Reuse. Pg 389.

Table 3 – Removal of Screenings Process Troubleshooting		
Item #	**Description**	**Remedial Measures**
1	Screenings collection volume decreased below KPI	Visually inspect bar screen condition. If sections of screen are damaged or bent, switch to standby screen and repair. Visually inspect the bar rake in operation. The rake may not be carrying material to the discharge chute and conveyor and this would be evident by a buildup of material in the channels upstream on the screens. If this is the case then switch to standby screen and repair rake.
2	Screenings collection volume above KPI	Investigate collected screenings to establish if illegal dumping of material occurred. High screenings volume after a significant rainstorm is anticipated as sewers are flushed and should not be a cause of alarm. Screenings Volume will temporarily increase after sewer cleaning is performed. Screenings Volume may also temporarily increase after the San Bernardino pump station self-cleaning cycle is operated.

Table 4 – Wet well Level Process Troubleshooting		
Item #	**Description**	**Remedial Measures**
1	Influent Level High and pumps in AUTO and operating	- Check Influent flow (FIT 101), compare flow to pumps on-line. Ensure pumps are all in AUTO. - The maximum speed of the AFD pumps P6 and P7 can be limited through an HMI lock. Therefore if the HMI lock is in place and set at 80%, the pumps will only ramp up to 80% even though the difference between the actual and set point level would require 100% pump capacity. This may require temporary release of the HMI lock or allowing additional pumps to operate. - Open the hatch and physically check level in wet well - Check and Clean LITs if actual level not high - Inspect the pump check valves. Release if blocked. - The fixed speed influent pumps (P1 – P5) are old and have belt drives. It is possible that the HMI indicates the pumps are operating but local inspection of the pumps indicate that the drives are slipping or operate without pumping due to priming problems.
2	Influent Level Low and pumps in AUTO and operating	- Check Influent flow (FIT 101), compare flow to pumps on-line. Ensure pumps are all in AUTO - Ensure at least one variable speed pump is operating in AUTO. - Ensure that the influent screens are operating correctly and have not plugged, preventing flow from entering the wet well.

Table 5 – Removal of Grit Process Troubleshooting		
Item #	**Description**	**Remedial Measures**
1	Grit collection volume decreased.	- Check that pump is operating. - Check that control timers are set correctly - Check that flushing valve has sufficient water pressure and control valve is operating correctly - Operate flush valve for 2 minutes or more to fluidize grit in grit hopper - Start pump in hand and confirm that pump operates - If unsuccessful, close grit hopper isolation valves and clear pipeline of any debris collected - Inspect the pump check valves. Release if blocked. - Check that the cyclone separator has not blocked. Evidence of this would be local flooding. - Check that the grit classifier auger is operating - Check that the lining on the trough of the grit classifier has not worn to a degree that prevents grit transport.
2	Grit collection volume increased.	- Visually check the quality of grit removed. If significant volumes of organics and fecal matter present then grit classifier is not operating correctly and should be repaired and/or adjusted. - High grit volume after a significant rainstorm is anticipated as sewers are flushed and should not be a cause for alarm. - Higher grit volume could also be collected after mixing of the influent wet well is performed. - Continued high grit volume may indicate sewer system line damage and infiltration of soils, sand and gravels. Report continued high grit volume to Operations Supervisor.

For further troubleshooting of mechanical equipment please reference Chapter 5 of the Operations and Maintenance Manual.

7.0 REFERENCES

a) See drawings M01, M02, M03, M04, P03, P04
b) See drawings P05, M05 – M09
c) See US Filter GA13 COG Screen O&M Manual

Attachment No. 2

IEUA
STANDARD OPERATING PROCEDURE (SOP)
FORMAT STANDARDIZATION

Attachment 2 includes the standardized format for preparing unit process systems and sub-system SOP's. Visual aids may include a variety of media from tables, photos, schematics, etc. that most effectively emphasizes the written step procedures.

The numbering protocol for each SOP shall be as follows:

Plant Area
Plant Number **SOP Number**

SOP No: XXXX-XXX-XXX

Plant Number		**Plant Area**	
Regional Plant No. 1	**0151**	**Preliminary Treatment**	**100**
Regional Plant No.2	**0180**	**Primary Treatment**	**200**
Carbon Canyon Water Recycling Facility	**0152**	**Secondary Treatment**	**300**
Regional Plant No.5	**0154**	**Tertiary Treatment**	**400**
		Odor Control System	**500**
		Auxiliary System	**600**
		Solids Treatment	**700**
		Solids Dewatering System	**800**
		Energy Management	**900**

The format of the SOP is intended to be simple to read, straight forward, consistent with all procedure write-ups, and have pictures or schematics for explanation. The heading is simple with the procedure type, name, and date issued. This is followed by a signature area to show that this procedure has been approved for use.

Eight headings are shown to give consistent, organized information in preparation of completing the procedure. These heading are:

- PURPOSE: This gives a general outline of what the procedure is for.
- SAFETY CONSIDERATIONS: Safety issues specific to the procedure.

- RESPONSIBILITY: Identifies the chain of command.
- CONDITIONS: When this procedure should or should not be completed.
- STANDARDS: What is the typical operational mode of the component or process system, such as frequency of operation.
- COMPLIANCE CONSIDERATIONS: The issues for local, state, and federal compliance that may be impacted.
- EQUIPMENT: List all equipment that will be needed to complete the procedure.
- IMPACT ON ENVIRONMENT: Beyond the compliance issues, what impact will the operation have?

The procedure is then documented into five task categories:

- PRE-STARTUP
- STARTUP
- NORMAL OPERATION
- SHUTDOWN
- ABNORMAL OPERATION

Inland Empire Utilities Agency
RP-4 Preliminary Treatment

Index:
SOP#: 0153-100-003
Issue Date: March 20, 2018

Authorized for Training By: Date:
Authorized for Implementation By: Date:
Implementation Completed By: Date:

PURPOSE

The principal purpose of this document is to provide the plant operator with step-by-step instructions for a successful and consistent operation of the influent bar screens processes and auxiliary equipment. This SOP is intended for routine startup conditions. Unique conditions may require the plant operator to take action in variance with this SOP.

SAFETY CONSIDERATIONS

When working at RP4, always be aware of your surroundings and the task. Always be aware that your working environment could expose you to the following: dangerous chemicals, automatically starting machinery, high noise levels, electrical shock, confined space hazards, fall hazards, drowning and engulfment hazards. Approach any job with safety as a primary concern.

RESPONSIBILITY

Operators will work at the direction of the Senior Operator/Operations Supervisor in the request to stop and start the Influent Screens and should have the ability to complete tasks alone if necessary. Complete the following steps, using this document as a note pad to record details, warnings, notes, or any variance from this procedure. Notify Operations Supervisor of intended startup of influent screens, and record time and name of contact in the Operator's Log Book. Notify the RP-1 operator prior to the actual startup.

CONDITIONS

Starting the influent screens is the first step to receiving flow at RP-4, and therefore implies that all of the downstream treatment systems are in full operation or can be placed in full operation to receive flow. Check the Operator's Log Book for record of any maintenance performed or unusual conditions during the shutdown of the screens. Verify that any equipment taken out-of-service for maintenance is ready to be placed in-service prior to startup.

STANDARDS

RP-4 operates the bar screen system in DUTY/STANDBY. The DUTY bar screen is in AUTO locally with an ON/OFF timer system. The STANDBY bar screen is isolated and in the OFF position. The screening conveyor runs in AUTO and is programmed with a stop delay once the bar screen finishes its run cycle.

COMPLIANCE CONSIDERATIONS

Alert RP-1 that the pumps will start as the changed flow at RP-1 may impact treatment and must be done in such a manner that will ensure compliance with the NPDES permit.

EQUIPMENT

N/A

IMPACT ON ENVIRONMENT

Starting the influent screens will initiate removal of screenings from the raw wastewater. The screenings conveying system must be in operation otherwise the removed screenings will plug the conveyor and produce a screenings spill. Operation of the influent screens implies operation of the influent pumps.

PROCEDURE

TASK 1.0 Pre-startup Steps

☐ 1. Operator must be familiar with the influent screenings enclosure and screening equipment control panels.	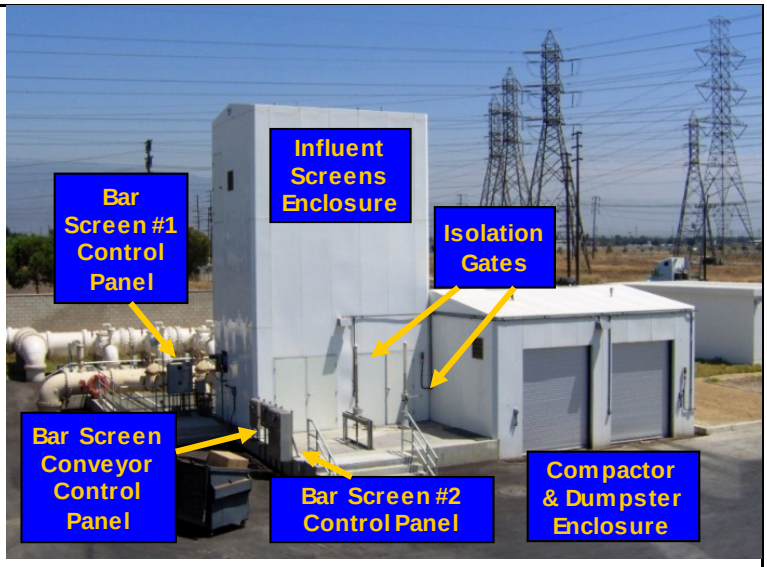 Figure 2: Influent Screen and Compactor Enclosure
☐ 2. Operator must be familiar with the influent screens and screenings conveyor.	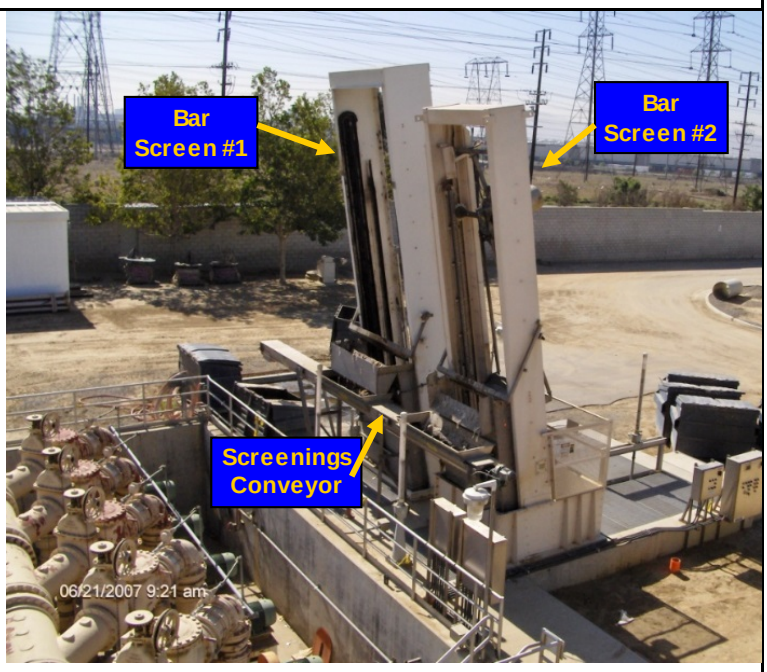 Figure 3: Influent Screen Conveyor

☐ 3. Check that a dumpster is in place at the exit of the conveyor	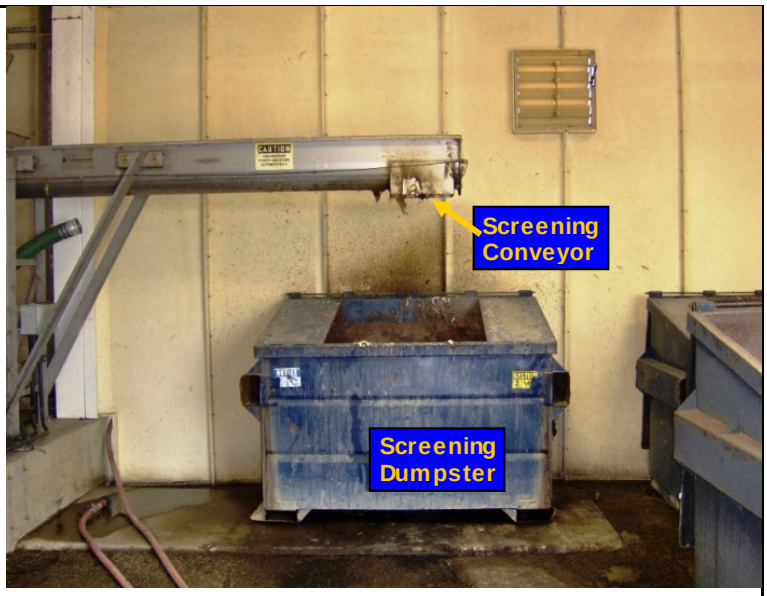 Figure 4: Screenings Conveyor Exit and Dumpster
For influent screens, check following: ☐ 4. Isolation gates are open for the Duty Screen Only	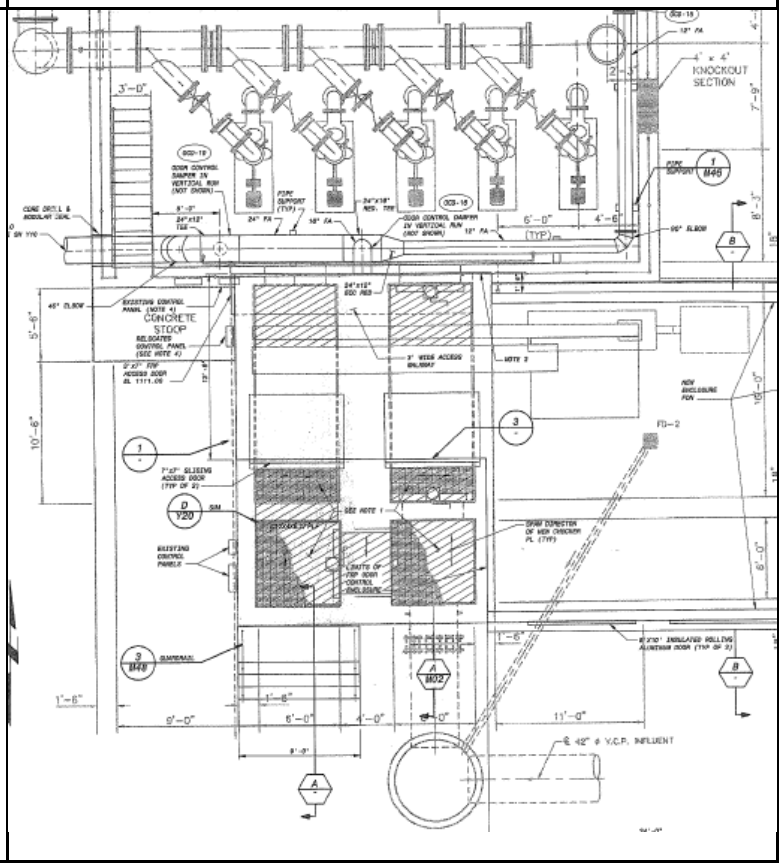

	Figure 5: Influent Screen Isolation Gates
Bar Screen No.1 ☐ 5. Operator must be familiar with the Influent Bar Screen #1 (BS1) control panel. ☐ 6. Check control panel isolator is not locked and tagged out. ☐ 7. Ensure local BS1 Main Power Stop is engaged. ☐ 8. Place the Isolation Switch to the ON position.	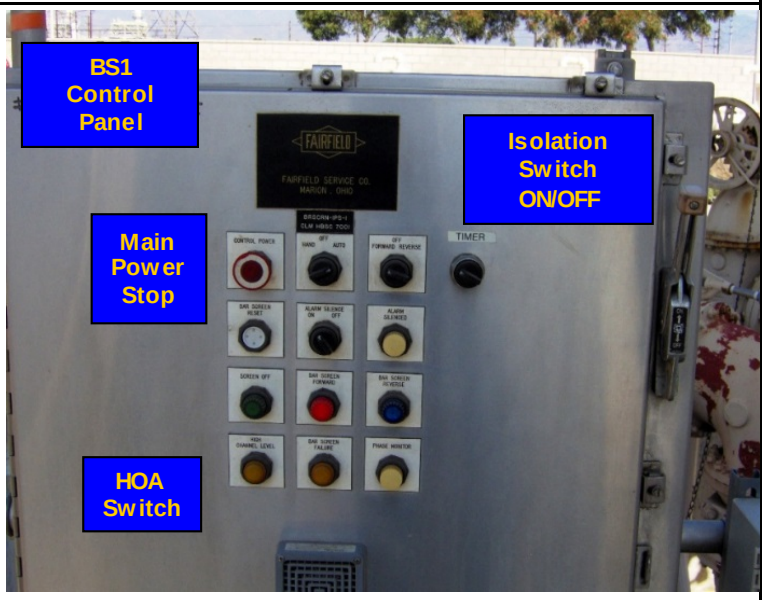 Figure 6: Influent Screen #1 Local Control Panel
Bar Screen No.2 ☐ 9. Operator must be familiar with the BS2 local control panel. ☐ 10. Check control panel isolators are not locked and tagged out. ☐ 11. Ensure local BS2 E-Stop is engaged ☐ 12. Place the Isolation Switch to the ON position. ☐ 13. Place the Power Switch to the ON position.	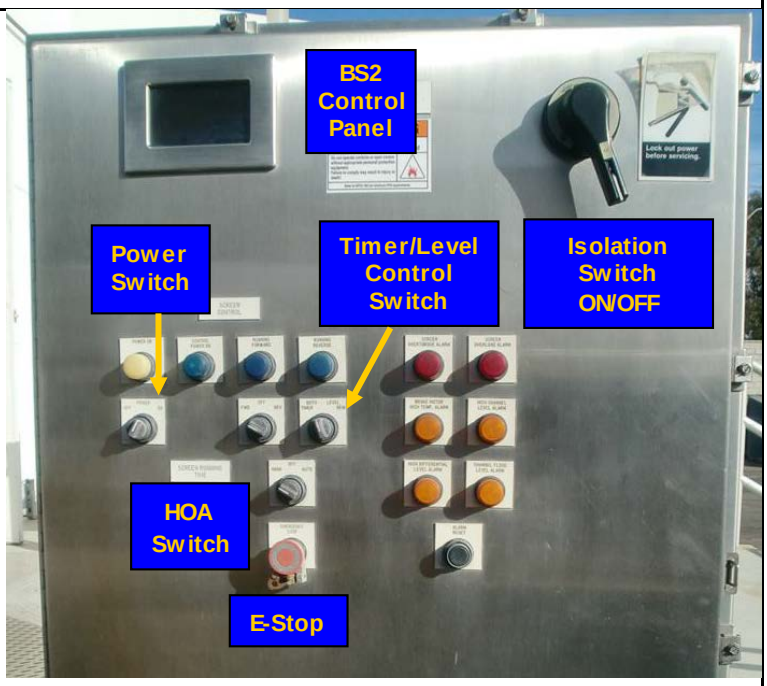 Figure 7: Influent Screen and Conveyor Control Panels

Screening Conveyor ☐ 14. Ensure that the local screening conveyor E-stop, located inside the screening enclosure, is engaged.	 **Figure 8: Influent Screen Conveyor E-Stop**
Screening Conveyor ☐ 15. Operator must be familiar with the screening conveyor local control panel. ☐ 16. Place the Isolation Switch to the ON position.	 **Figure 9: Influent Screen Conveyor Control Panel**

TASK 2.0 STARTUP
Steps

Screening Conveyor ☐ 1. Turn H-O-A selector switch to AUTO position.	 Figure 10: Conveyor Local Control Panel
Screening Conveyor ☐ 2. Disengage the Screening Conveyor E-stop, located inside the screening enclosure.	 **Figure 11: Influent Screen Conveyor E-Stop** **The conveyor will now start via a remote input signal by the local relays controlling the duty screen. Once started, the conveyor will start its run cycle. The conveyor will complete its current cycle and stop at a rest position.**

Bar Screen No.1

- ☐ 1. Confirm that the influent gates are set correctly for operation of this screen as the duty screen. Turn the Timer Switch to the left position as shown to the left.
- ☐ 2. Turn H-O-A selector switch to AUTO position.
- ☐ 3. Disengage local BS1 Main Power Stop.

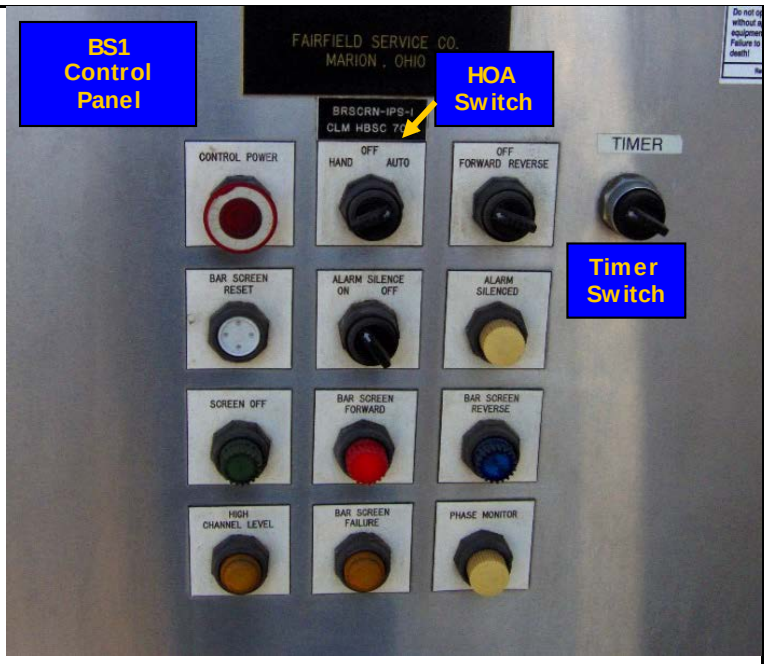

Figure 12: Influent Screen#1 Local Control Panel

The screen will now start via an electro-mechanical timing signal located in the Local Control Panel. Once started, the rake carriage will start its run cycle.

Bar Screen No.2

- ☐ 1. Confirm that the influent gates are set correctly for operation of this screen as the duty screen. Turn the T-B-L-R selector switch to the computer (T) position.
- ☐ 2. Turn the HOA selector switch to the AUTO position.
- ☐ 3. Disengage local BS2 E-Stop.

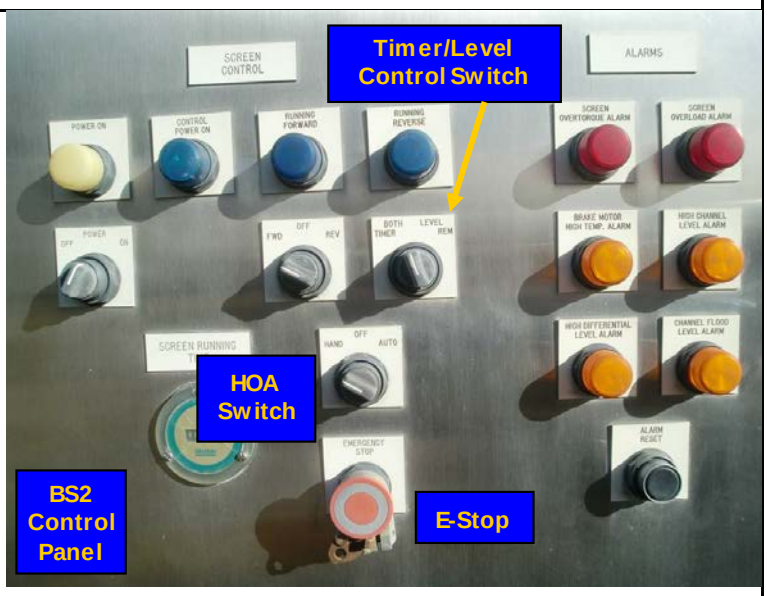

Figure 13: Influent Screen#2 Local Control Panel

The screen will now start via a timing signal from a PLC located in the Local Control Panel. Once started, the rake carriage will start its run cycle. If the initiating contact

	opens in the middle of a cycle, the rake will complete its current cycle and stop at the upper rest position. Where the park position proximity switch will open and signal the PLC to de-energize the forward screen starter, stopping the rake.

TASK 3.0 Normal Operation: Operate Influent Bar Screens in AUTO - Timer
Steps for Screening Conveyor (The normal operation for the screens is a Duty/Standby configuration. Only one bar screen operates at a time.)

<table>
<tr><td>Screening Conveyor

☐ 1. Set initial set-points for Timers and Levels as follows:</td><td>
<table>
<tr><th colspan="3">Table 6: Initial Operating Set Points</th></tr>
<tr><th>Parameter</th><th>Screen 1</th><th>Screen 2</th></tr>
<tr><td>Operating Time of conveyor after screens shutoff (minutes)</td><td>3</td><td>3</td></tr>
</table>

Conveyor will initiate individual cycles based on the duty bar screen online and will run for operator defined duration after the bar screen cycle has ended.</td></tr>
<tr><td>Bar Screen No.1 and 2

☐ 2. Set initial set-points for Timers and Levels as follows:</td><td>
<table>
<tr><th colspan="3">Table 2 – Initial Operating Set Points</th></tr>
<tr><th>Parameter</th><th>Screen 1</th><th>Screen 2</th></tr>
<tr><td>Time between rake operation (minutes)</td><td>5</td><td>5</td></tr>
<tr><td>Time between rake operation cycles (minutes)</td><td>20</td><td>20</td></tr>
</table>
</td></tr>
</table>

TASK 4.0 Shutdown Influent Screens and Conveyor – LOCAL

Steps

Bar Screen No.1

- ☐ 1. Turn H-O-A selector switch to OFF position.
- ☐ 2. Engage Main Power Stop
- ☐ 3. Place the Isolation Switch to the OFF position.
- ☐ 4. Close the influent gates for this screen **ONLY AFTER** opening gates for Bar Screen #2 as the duty screen.

Figure 14: Influent Screen #1 Local Control Panel

Bar Screen No.2

- ☐ 5. Turn H-O-A selector switch to OFF position.
- ☐ 6. Engage E-Stop
- ☐ 7. Place the Isolation Switch to the OFF position.
- ☐ 8. Close the influent gates for this screen **ONLY AFTER** opening gates for Bar Screen #1 as the duty screen.

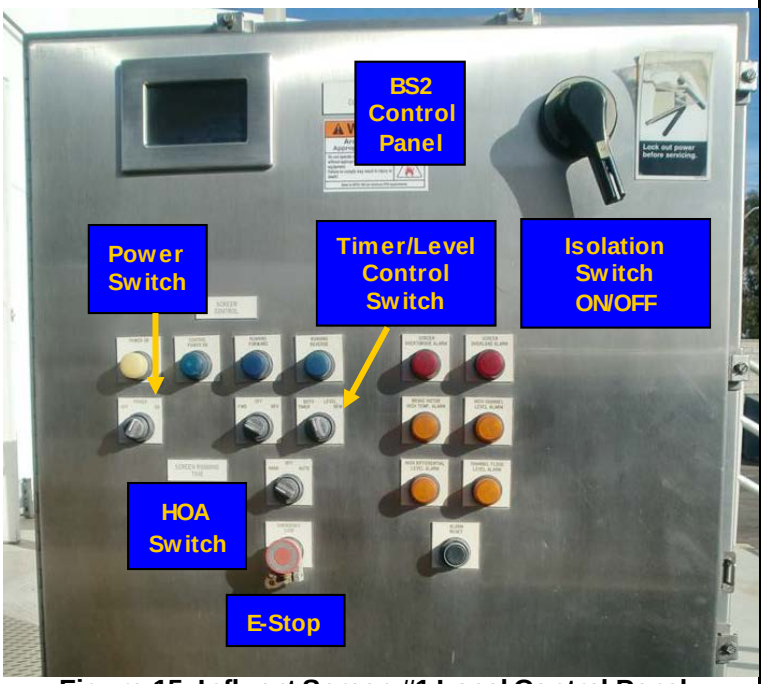

Figure 15: Influent Screen #1 Local Control Panel

Screening Conveyor ☐ 9. Engage E-Stop	 **Figure 16: Influent Screening Conveyor E-Stop**
Screening Conveyor ☐ 10. Turn H-O-A selector switch to OFF position. ☐ 11. Place the Isolation Switch to the OFF position.	 **Figure 17: Influent Screen #2 Local Control Panel**

TASK 5.0 Abnormal Conditions: Operate Influent Screens in HAND

Steps for Screen #2 (It may be necessary to operate the influent screens in HAND under certain circumstances. The common reason for having to operate the screens in HAND is if the rake blocks or requires maintenance or setting of proximity switches.)

Bar Screen No.2

- ☐ 1. Turn the H-O-A selector switch to the HAND position.
- ☐ 2. Place the Forward/Off/Reverse Switch to the Forward position.
- ☐ 3. Press the control power/reset pushbutton to energize the master control relay (MCR) and enable the PLC output power to the motor starters if the equipment does not immediately start.
- ☐ 4. Inspect for operation of the bar screen equipment.

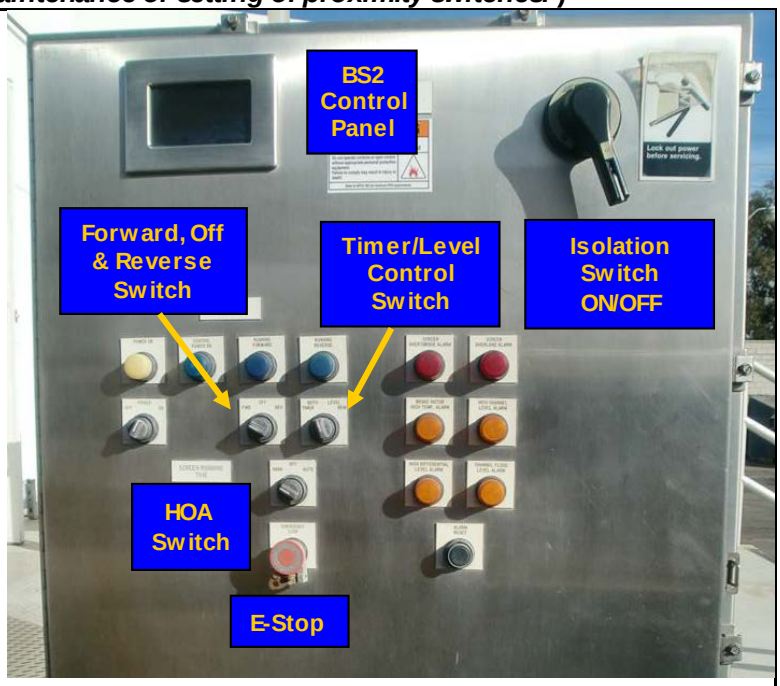

Figure 18: Influent Screen #2 Local Control Panel

Attachment No. 3

IEUA
STANDARD OPERATING PROCEDURES (S0P) &
UNIT PROCESS CONTROL PROCEDURE (UPCP)
FACILITY MATRIX

Attachment 3 includes a matrix of the facility O&M Manual SOP and UPCP documents. The attached matrix includes but is not limited to the SOPs and UPCPs provided.

IEUA - WASTEWATER FACILITY MATRIX				
FOR STANDARD OPERATING PROCEDURES (SOP) & UNIT PROCESS CONTROL PROCEDURES (UPCP) DEVELOPMENT				
O&M MANUAL			RP1	
CHAPTER	AREA	FACILITY HIERARCHY	UPCP	SOP
1.0		**Introduction**		
		Response to Public Complaint		X
		Notification Procedure for Plant Shutdown/Startup		X
		Plant Shutdown/Startup		X
		Notification of a Potential Plant Upset		X
		On Call Laptop Operation		X
		Vactor Dump Station Operation		X
		Power Failure		X
2.0	100	**Preliminary Treatment**	X	
		Bypassing Influent Flow		X
		Out of Parameter Influent Flow		X
		Influent Channel		X
		Daily Activities and Rounds		X
		Metering		X
		High Flow contingency Plan		X
		Screening		X
		Screenings Press		X
		Grit Removal System(s)		X
		Aerated Grit Chamber		X
		Vortex Grit Chamber		X
		Bypassing Grit Removal System		X
		Chemical Addition		X
		Monitoring/Sampling		X
IEUA - WASTEWATER FACILITY MATRIX				
FOR STANDARD OPERATING PROCEDURES (SOP) & UNIT PROCESS CONTROL PROCEDURES (UPCP) DEVELOPMENT				
O&M MANUAL			RP1	

CHAPTER	AREA	FACILITY HIERARCHY	UPCP	SOP
3.0	200	**Primary Treatment**	**X**	
		Primary Plant Air Systems Operation		**X**
		Daily Activities and Rounds		**X**
		Primary Settling		**X**
		Sludge Removal		**X**
		Scum Removal		**X**
		Equalization Basins		**X**
		Chemical Addition		**X**
		Monitoring/Sampling		**X**
4.0	300	**Secondary Treatment**	**X**	
		Daily Activities and Rounds		**X**
		Aeration		**X**
		Ascending Options for Handling Plant Upsets		**X**
		Anoxic Mixers		**X**
		DO or Air Flow Control		**X**
		Blower(s)		**X**
		Secondary Clarifiers		**X**
		Scum Removal		**X**
		Pumping		**X**
		RAS Pump System		**X**
		Scum Removal System		**X**
		WAS Pump System		**X**
		Intermediate Pump Station		**X**
		Storm Water Pumping System Operation		**X**
		Chemical Addition		**X**
		Monitoring/Sampling		**X**
5.0	400	**Tertiary Filtration Treatment**	**X**	
		Daily Activities and Rounds		**X**
		Filtration		**X**
		Filtration Bypass(s)		**X**
		Filter Backwash System		**X**
IEUA - WASTEWATER FACILITY MATRIX				
FOR STANDARD OPERATING PROCEDURES (SOP) & UNIT PROCESS CONTROL PROCEDURES (UPCP) DEVELOPMENT				
O&M MANUAL			**RP1**	

CHAPTER	AREA	FACILITY HIERARCHY	UPCP	SOP
		Sedimentation		
		Flocculation and Rapid Mix		X
		Old Effluent Structure		X
		New Effluent Structure		X
		Chlorination		X
		Contact Basin(s)		X
		Responding to Low CT Condition		X
		Responding to High Coliform Counts		X
		Dechlorination		X
		Dechlorination Structures		X
		Chemical Addition		X
		Monitoring/Sampling		X
		Responding to High or Low Effluent pH		X
		Responding to Low CT Condition		X
		Responding to High Effluent PO4's		X
		Responding to High Effluent Turbidity		X
6.0	500	**Odor Control System**	X	
		Daily Activities and Rounds		X
		Chemical Scrubbers		X
		Bio filters		X
		Chemical Addition		X
		Monitoring/Sampling		X
7.0	600	**Auxiliary System**	X	
		Daily Activities and Rounds		X
		Utility Water Pump Station		X
		Plant Air System(s)		X
IEUA - WASTEWATER FACILITY MATRIX				
FOR STANDARD OPERATING PROCEDURES (SOP) &				
UNIT PROCESS CONTROL PROCEDURES (UPCP) DEVELOPMENT				
O&M MANUAL			**RP1**	

CHAPTER	AREA	FACILITY HIERARCHY	UPCP	SOP
8.0	700	**Solids Treatment**	**X**	
		Daily Activities and Rounds		**X**
		Primary Sludge		**X**
		Gravity Thickener		**X**
		Thickened Sludge Pumping		**X**
		Secondary Waste Activated Sludge		**X**
		DAFT		**X**
		Pressurization System		**X**
		Thickened Sludge Pumping		**X**
		Digestion		**X**
		Parallel Operation		**X**
		Series Operation		**X**
		Acid Operation		**X**
		Meso Operation		**X**
		Thermo Operation		**X**
		Mixing System		**X**
		Flow Equalization		**X**
		PRV/J-Tube		**X**
		Pumping		**X**
		Air Injection System		**X**
		Sand Extraction System		**X**
		Iron Sponge		**X**
		Response to a Digester Venting Event		**X**
		Heating Systems		**X**
		Boiler		**X**
		Sludge Recirculation		**X**
		Heat Exchangers		**X**
9.0	800	**Solids Dewatering System**	**X**	
		Dewatering		**X**
		Centrifuge		**X**
		Belt Press		**X**
		Conveyor		**X**
		Sludge Pumps		**X**
		Hopper		**X**
		Filtrate Management		**X**
		Centrate Management		**X**
IEUA - WASTEWATER FACILITY MATRIX				
FOR STANDARD OPERATING PROCEDURES (SOP) &				
UNIT PROCESS CONTROL PROCEDURES (UPCP) DEVELOPMENT				

O&M MANUAL			RP1	
CHAPTER	**AREA**	**FACILITY HIERARCHY**	**UPCP**	**SOP**
		Loading		**X**
		Chemical Addition		**X**
		Monitoring/Sampling		**X**
10.0	900	**Energy Management System**	**X**	
		Daily Activities and Rounds		**X**
		Fuel Cell		**X**
		Cogeneration Engines		**X**
		Ancillary Systems		**X**
		Standby Generators		**X**
		Operating Stand-By Generator(s)		**X**
		Gas Handling System		**X**
		Iron Sponges		**X**
		Waste Gas Burner		**X**
		Chemical Addition		**X**
		Monitoring/Sampling		**X**

CHEMICALS USED BETWEEN ALL THE FACILITIES	
Chemical	**Purpose**
1. Aluminum Sulfate	Coagulant – Pre-filter & Filter BW Water Sed.
2. Ferric Chloride	H2S Digester Gas & PO4 Reduction
3. Sodium Hypochlorite	Chlorination, Odor Control, Solids Treatment
4. Sodium Bisulfite	Dechlorination
5. Anionic Polymer	Primary
6. Cationic Polymer	Waste Activated Solids Thickening and Solids Dewatering
7. Caustic Soda	Odor Control
8. Anti-Struvite Chemical	Solids Dewatering Filtrate/Centrate Conveyance

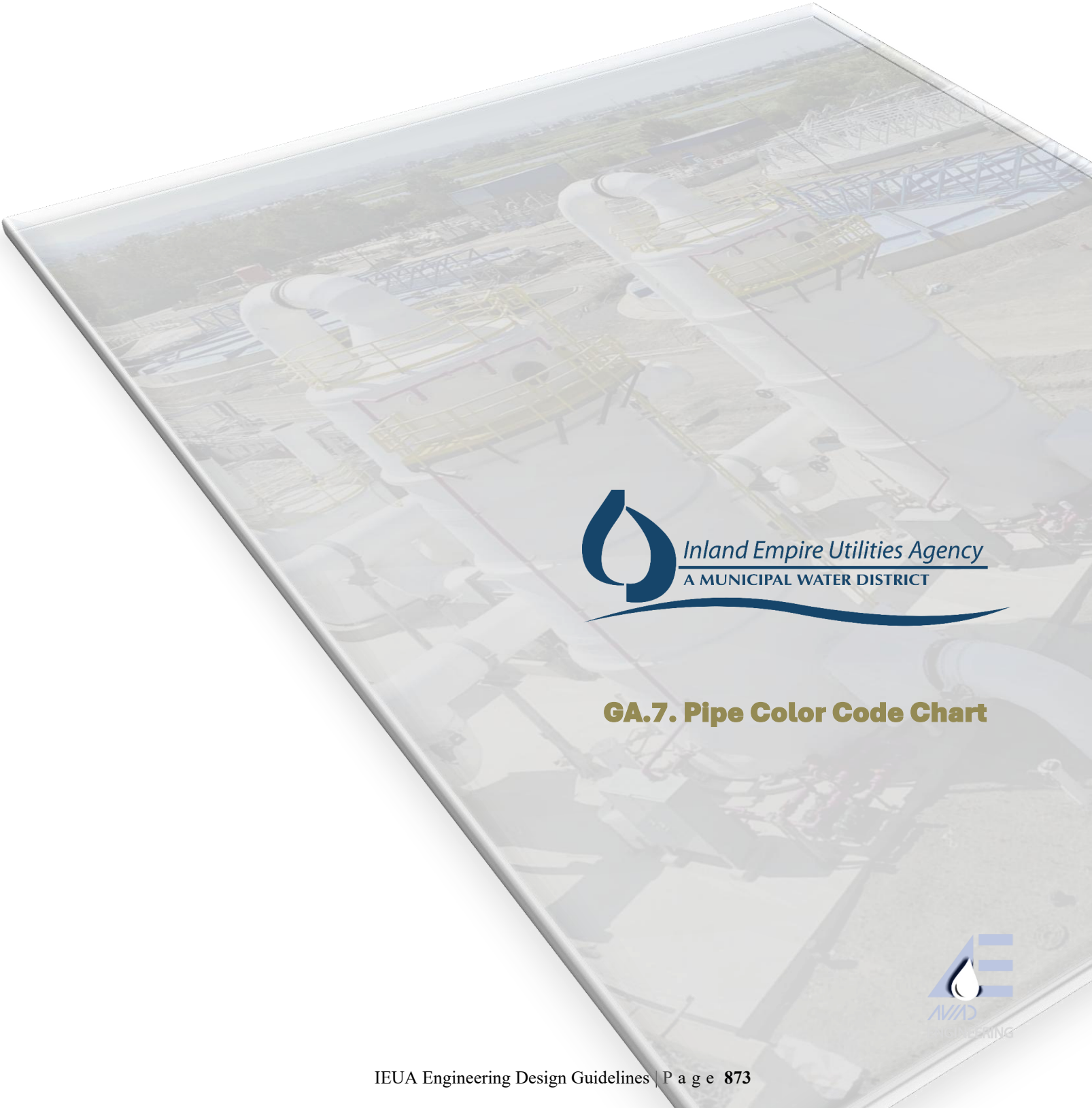

Inland Empire Utilities Agency
A MUNICIPAL WATER DISTRICT

GA.7. Pipe Color Code Chart

GA.7. Pipe Color Code Chart

Inland Empire Utilities Agency Color Chart

Service	Color	Suggested Vista Paint Number	Labeling Specifications*
Alum	Orange	7957	BLACK ON ORANGE
Ammonia	Orange	7957	BLACK ON ORANGE
Sodium Bisulfite	Florescent Orange	AC_114	BLACK ON ORANGE
Ferric Chloride	Burnt Red	AC_118	BLACK ON ORANGE
Sodium Hypochlorite	Yellow	AC_104	BLACK ON ORANGE
Sulfuric Acid	Stainless Steel	NA	BLACK ON ORANGE
Potable Water	Blue	7326	WHITE ON GREEN
Recycled/Utility Water	Purple	AC_138	WHITE ON PURPLE
Digester Gas	Yellow	AC_104	BLACK ON YELLOW
Centrate	Desert Sand	8506	WHITE ON GREEN
Polymer	Light Blue	7330	BLACK ON WHITE
Foul Air	White	00	BLACK ON WHITE
Plant Air	Green	7653	WHITE ON BLUE
Drain	Desert Sand	8506	WHITE ON GREEN
Natural Gas	Yellow	AC_104	BLACK ON YELLOW
Methane	Remove (same as natural gas)		BLACK ON YELLOW
Engine oil, etc	Tan	8530	BLACK ON WHITE
Electrical Conduit	Red	8093	BLACK ON WHITE
Fire Protection	Red	8093	WHITE ON RED
General Process	Desert Sand	8506	BLACK ON WHITE

* See Installation Guidelines for specifications on sizing, location, etc.

You created this PDF from an application that is not licensed to print to novaPDF printer (http://www.novapdf.com)

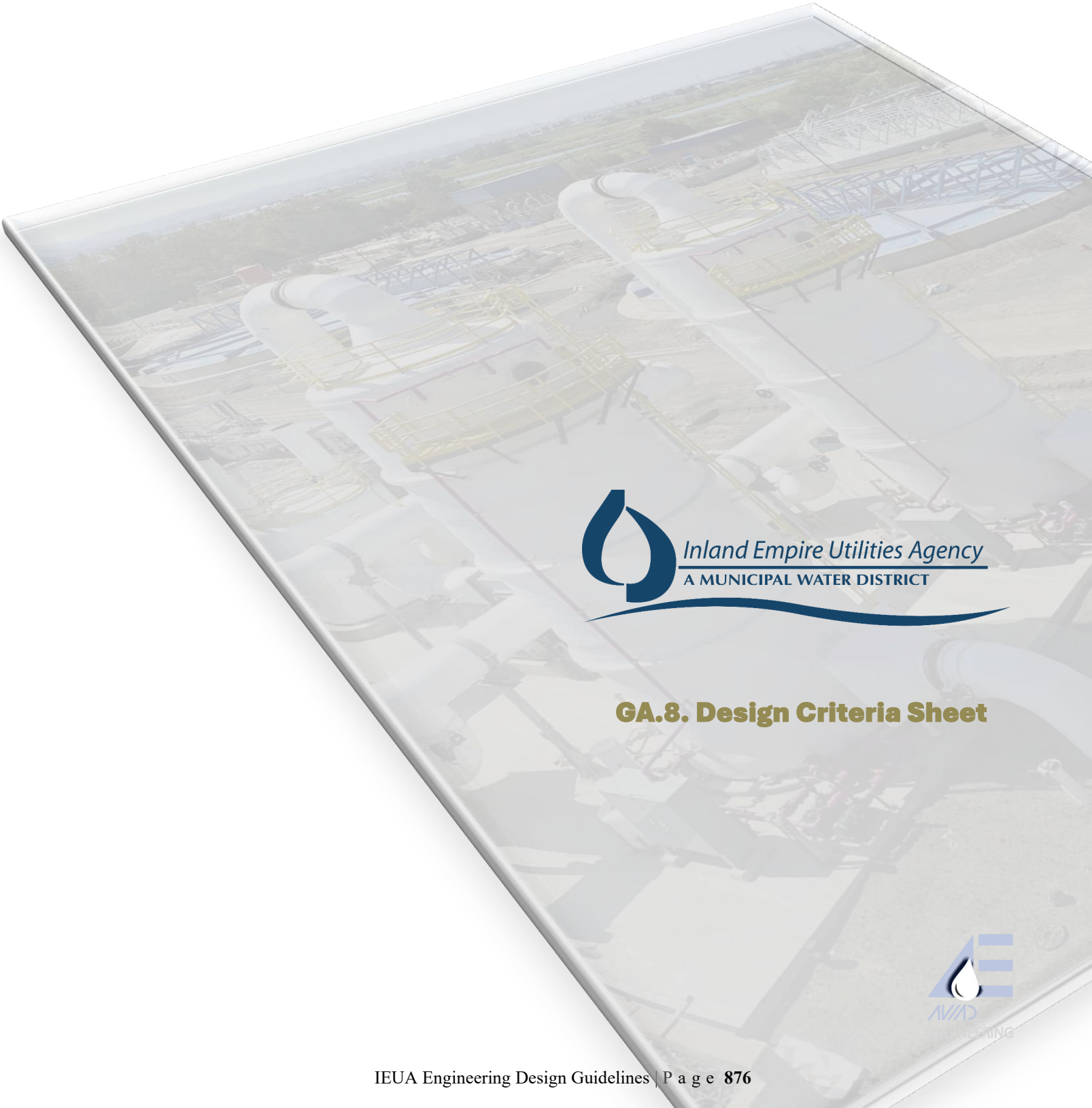

Inland Empire Utilities Agency
A MUNICIPAL WATER DISTRICT

GA.8. Design Criteria Sheet

GA.8. Design Criteria Sheet

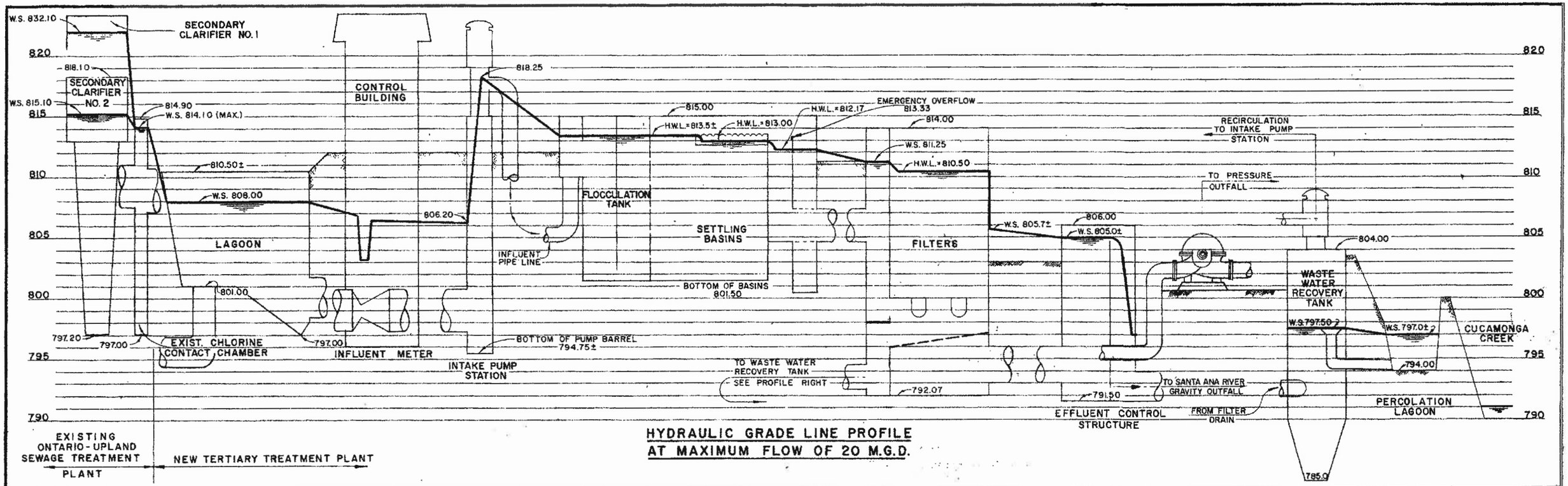

HYDRAULIC GRADE LINE PROFILE AT MAXIMUM FLOW OF 20 M.G.D.

GENERAL PLANT DESIGN CRITERIA

GENERAL	UNIT	INITIAL (STAGE 1)	ULTIMATE (STAGE 2)
PLANT CAPACITY			
NORMAL	MGD	16	32
	A-F/YR	18,000	36,000
MAXIMUM	MGD	20	40
	GPM	13,900	27,800
	CFS	31	62
FLOW METERING			
PLANT INFLUENT			
TYPE		42 IN. VENTURI TYPE	42 IN. VENTURI TYPE
RANGE	MGD	10–50	10–50
DIFFERENTIAL (MAX.)	IN.	48–60	48–60
INTAKE PUMPS			
	NUMBER	2	2
TYPE		LOW LIFT PROPELLER-TYPE	
CAPACITY	GPM	14,000 (EA.)	14,000 (EA.)
HEAD (TDH)	FEET	12	12
FLASH MIXING			
TYPE		UTILIZE THE INTAKE PROPELLER TYPE PUMP AS FLASH MIXER	

CHEMICAL DOSAGES	DOSAGE (PPM) AVERAGE	MAXIMUM	MINIMUM
COAGULANT I (8.25% Al_2O_3 SOL'N)	100	200	50
COAGULANT II (40% $FeCl_3$ SOL'N)	75	150	50
CHLORINE	8	50*	5
POLYELECTROLYTE (1)-COAGULANT AID	0.25	1	0
POLYELECTROLYTE (2)-FILTER CONDITIONING	0.05	0.1	0
POLYELECTROLYTE (3)-SLUDGE CONDITIONING	2.5	5	1
SPARE CHEMICAL			

*BREAK POINT CHLORINATION

CHEMICAL FEEDER CAPACITY	UNIT	INITIAL (STAGE 1)	ULTIMATE (STAGE 2)
COAGULANT I (8.25% Al_2O_3 SOL'N)	NO	2	3
	GAL/HR	260 (MAX)	260 (MAX)
COAGULANT II (40% $FeCl_3$ SOL'N)	NO.	2	3
	GAL/HR	260 (MAX)	260 (MAX)
CHLORINATOR (EACH)	NO.	2	3
	LB/24 HR	8,000	8,000
POLYELECTROLYTE (1) AND (3)	NO.	2	3
	GAL/HR	40 (MAX)	40 (MAX) EA
POLYELECTROLYTE (2)	NO.	2	3
	GAL/HR	20	20 (MAX) EA
SPARE CHEMICAL	NO.	SPACE	SPACE
CHEMICAL STORAGE AND DILUTION TANKS			
COAGULANT I STORAGE	NO.	1	1
(8.25% Al_2O_3 SOLUTION)	GAL.	20,000	20,000
COAGULANT II STORAGE	NO.	1	1
($FeCl_3$ SOLUTION)	GAL.	20,000	20,000
CHLORINE STORAGE	NO.	8-1 TON	8-1 TON
POLYELECTROLYTE STORAGE	NO.	1	1
	GAL.	1,000	1,000
POLYELECTROLYTE DISSOLVING TANK			
CATIONIC POLYELECTROLYTE	NO.	2	2
	GAL.	1,000	1,000
NONIONIC POLYELECTROLYTE	NO.	2	2
	GAL.	1,500	1,500
FLOCCULATION TANKS			
TANKS	NO.	2	4
DETENTION TIME (MAX FLOW)	MINUTES	20	20
VOLUME (TOTAL)	GAL	278,000	556,000
	CF	37,000	74,000
SIDEWATER DEPTH (AVE.)	FT	11.5	11.5
DIMENSIONS (EA)	FT	40 X 40	40 X 40
TANK AREA (EA)	SF	1,600	1,600
NO OF 3-HP FLOCCULATORS (EA TANK)	NO.	4	4
RANGE OF G VALUE (EA FLOC)	SEC⁻¹	100 MAX	100 MAX
TYPE FLOCCULATOR		VERTICAL SHAFT	VERTICAL SHAFT

SETTLING TANKS	UNIT	INITIAL (STAGE 1)	ULTIMATE (STAGE 2)
TYPE		HORIZONTAL FLOW	HORIZONTAL FLOW
TANKS	NO.	2	4
DETENTION TIME (MAX FLOW)	MINUTES	60	60
VOLUME (TOTAL)	GAL	833,000	1,667,000
	CF	112,000	224,000
SIDE WATER DEPTH (SWD) (AVE)	FT	12	12
DIMENSIONS (EACH)	FT	40 X 120	40 X 120
BASIN AREA (EACH)	SF	4,800	4,800
SURFACE LOADING (MAX FLOW)	GPD/SF	2,080	2,080
LENGTH OF WEIRS (EACH TANK)	FT	400	400
WEIR LOADING (MAX FLOW)	GPD/FT	25,000	25,000
MEAN HORIZONTAL VELOCITY (MAX)	FT/MIN	1.94	1.94
FILTERS			
TYPE		OPEN, DUAL MEDIA, HIGH-RATE GRAVITY TYPE	
NO. OF FILTERS	NO.	8	16
FILTRATION RATE (MAX FLOW) (ONE FILTER OFF THE LINE)	GPM/SF	6.67	6.67
RATE PER FILTER (MAX FLOW) (ONE FILTER OFF THE LINE)	GPM	2,000	2,000
MEDIA AREA PER FILTER	SF	300	300
SIZE OF EACH FILTER BED	FT	12.33 X 24.25	12.33 X 24.25
ANTHRACITE DEPTH	INCHES	20	20
EFFECTIVE SIZE	MM	1.4–1.5	1.4–1.5
UNIF. COEFF.	LESS THAN	1.5	1.5
SAND DEPTH	INCHES	10	10
EFFECTIVE SIZE	MM	[illegible]	[illegible]
UNIF. COEFF.	LESS THAN	1.5	[illegible]
GRAVEL DEPTH	INCHES	18	18
BACKWASH (MAX RATE)	IN./MIN	30	30
	GPM/SF	18.7	18.7
	GPM	5,600	5,600
FILTER UNDERDRAIN SYSTEM		PRECAST CONCRETE	
AVERAGE STATIC HEAD FOR BACKWASHING	FT	5	5

	UNIT	INITIAL (STAGE 1)	ULTIMATE (STAGE 2)
WASTEWATER RECOVERY TANK			
DESIGN FLOW	GAL/DAY	360,000	720,000
		(2.25% OF PLANT DESIGN FLOW)	
NUMBER OF HOLDING TANKS	NO.	1	2
VOLUME TOTAL	GAL.	400,000	800,000
EFFECTIVE	GAL.	91,000	182,000
TANK SIZE TOTAL		35' DIA. [illegible]	[illegible]
RECIRCULATION PUMP	NO.	1	2
CAPACITY	GPM	900 GPM AT 25' TDH	900 GPM AT 25' TDH
FILTER WASHING CYCLE (EA FILTER)	HOURS	8	8
DURATION OF WASH (MAX)	MINUTES	10	10
EMERGENCY LAGOON	NO.	1	1
CAPACITY	GAL.	574,000±	574,000±
SIZE		25,700 SF X 3 FT DEEP	25,700 SF X 3 FT. DEEP
SLUDGE HOLDING TANK			
DESIGN FLOW DAY*	GAL/DAY	32,400	64,800
(3 SLUDGE-SWEEP CYCLES PER DAY)	GPM (AVE.)	22.5	45
HOLDING TANK	NO.	1	2
EFFECTIVE VOLUME	GAL	12,000	24,000
EFFECTIVE SIZE (EACH)	FT	4 X 42 X 19	4 X 42 X 19
RECIRCULATION PUMP	NO.	1	2
CAPACITY	GPM	20–80 (22.5 AVE)	20–80 (45 AVE)
EXCESS SLUDGE WASTE PUMP	NO.	1	2
CAPACITY (TOTAL)	GPM	50	100
AERATION SYSTEM	NO.	1	2
AIR VOLUME	CFM	60	120
APPURTENANCES		6 INCH OVERFLOW AND 6 INCH DRAIN PIPING. FOR EACH TANK 1-SLUDGE DENSITY METER AND 1-MAGNETIC FLOW METER	

*0.2% OF PLANT DESIGN FLOW

AS BUILT DRAWING

REV	DATE	BY	DESCRIPTION

SCALE: NO SCALE

DESIGNED S. KAWAMURA
DRAWN W. YATOMI
CHECKED J. SMITH

SUBMITTED Brian E. Stone, PROJECT ENGINEER, R.C.E. NO. 12334, DATE 3/31/71
RECOMMENDED [illegible], JAMES M. MONTGOMERY CONSULTING ENGINEERS, INC., R.C.E. NO. 10670, DATE 4-23-70

JAMES M. MONTGOMERY CONSULTING ENGINEERS, INC.
555 EAST WALNUT STREET PASADENA, CALIFORNIA 91101
PASADENA COSTA MESA FORT LAUDERDALE LAFAYETTE LA JOLLA LAS VEGAS VENTURA

APPROVED [illegible], MANAGER, C.B.M.W.D, DATE 3/31/71
APPROVED _____ DATE

CHINO BASIN MUNICIPAL WATER DISTRICT
TERTIARY TREATMENT PLANT NO. 1
DESIGN CRITERIA AND HYDRAULIC PROFILE

SHEET G-2 OF 73 SHEETS

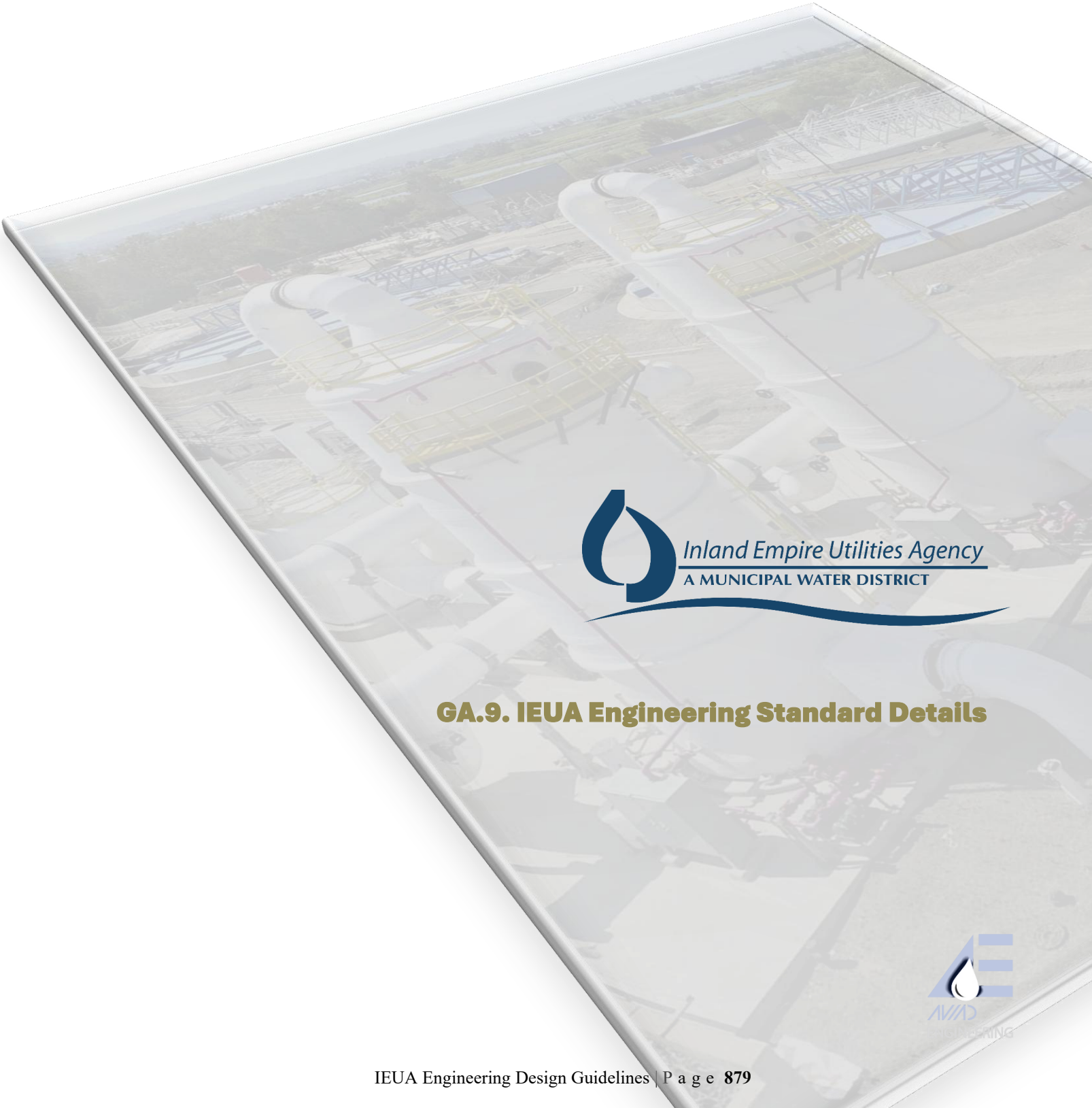

Inland Empire Utilities Agency
A MUNICIPAL WATER DISTRICT

GA.9. IEUA Engineering Standard Details

GA.9. IEUA Engineering Standard Details

LEGEND

- INITIAL BACKFILL
- SIDE BACKFILL
- TRENCH BACKFILL
- MAIN BACKFILL
- BEDDING
- AGGREGATE BASE
- SAND BACKFILL
- AC PAVEMENT
- FINAL BACKFILL
- EXISTING GROUND
- CONCRETE

SCALE: NOT TO SCALE

Inland Empire Utilities Agency
A MUNICIPAL WATER DISTRICT

APPROVED BY:

JASON MARSEILLES, P.E. — JULY 2025
MANAGER OF ENGINEERING — DATE

DESIGN BY: GHD, INC.

APPROVED BY:
CHRIS BARTLEMAN, P.E. — JULY 2025
C81075 — DATE

Inland Empire Utilities Agency

LEGEND
AND SYMBOLS

REVISION			
NO.	BY	DATE	APPROVED

C-EW-000

SHEET 1 OF 1

\\ghdnet\ghd\US\Irvine\Projects\111\11181240 IEUA On Call Engineering Serv\Phase 08 - IEUA Standard Details\4- Delivery Documents\1- CAD\Sheets\Civil Standard Details\C-EW-000.dwg May 30, 2025 - 2:28pm

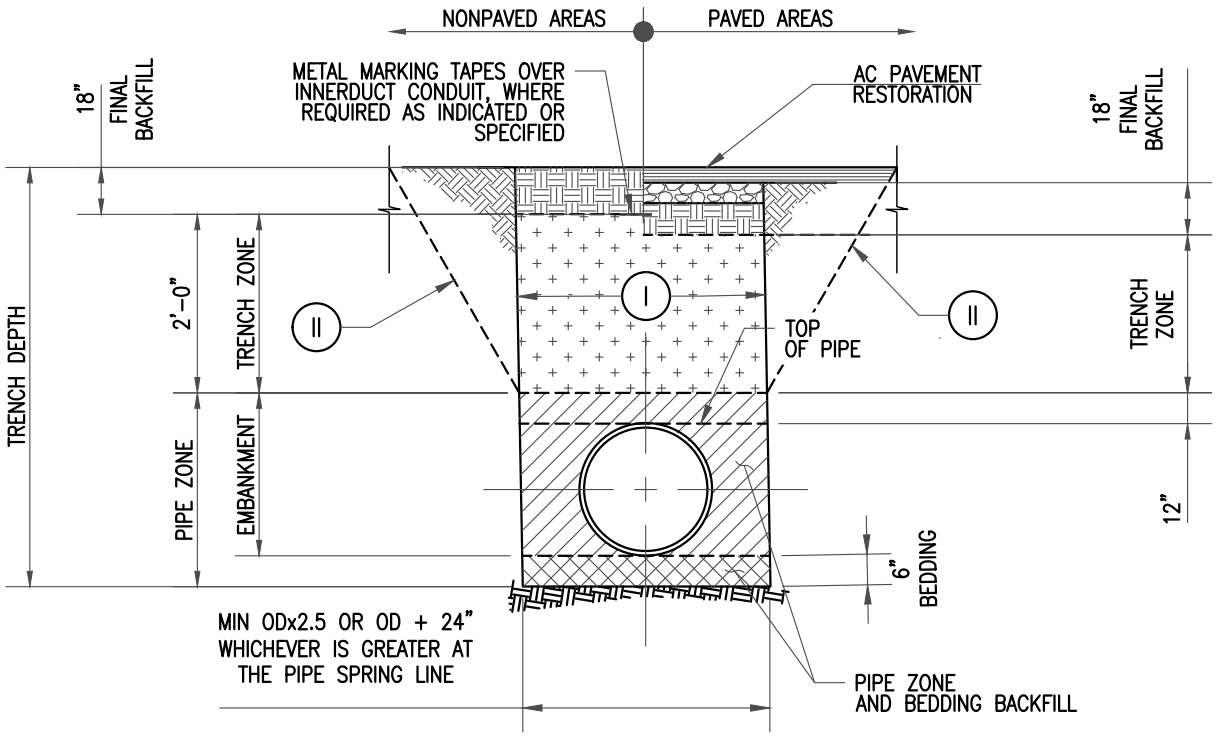

FLEXIBLE PIPE

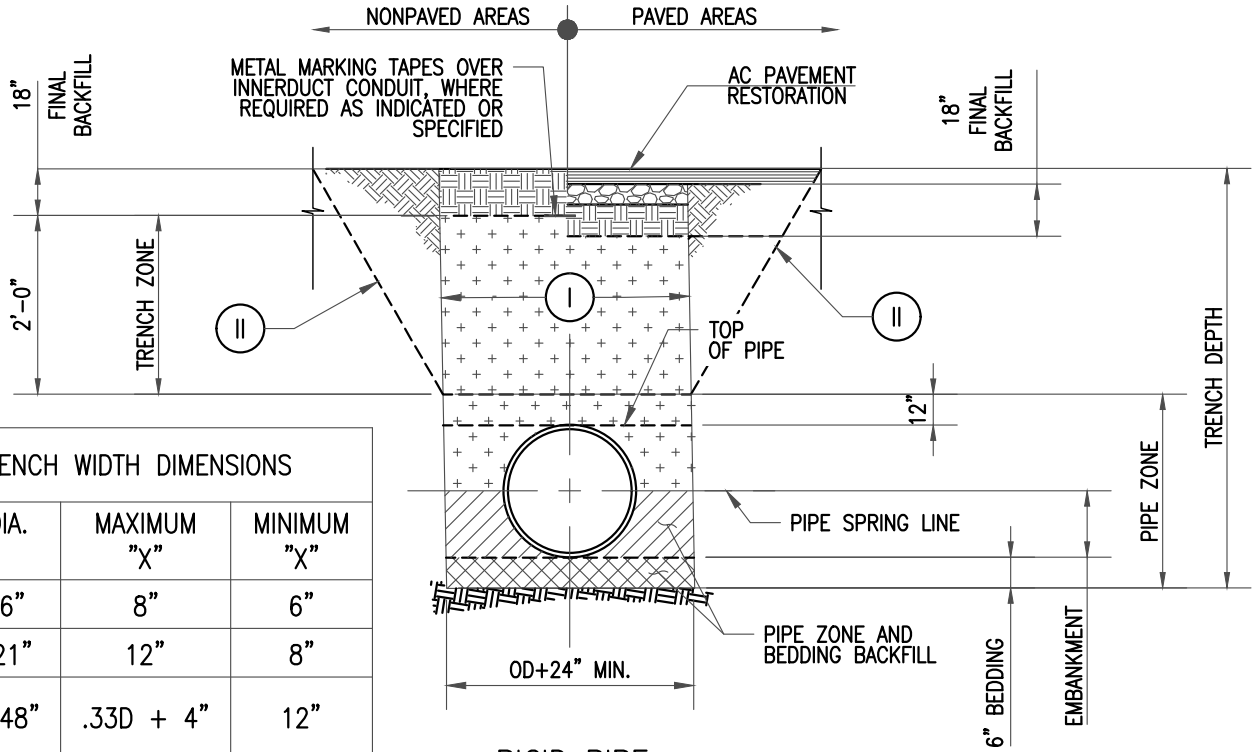

RIGID PIPE

TRENCH WIDTH DIMENSIONS		
PIPE DIA. "D"	MAXIMUM "X"	MINIMUM "X"
4" – 6"	8"	6"
8" – 21"	12"	8"
24" – 48"	.33D + 4"	12"
> 48"	20"	12"

SCALE: NOT TO SCALE

Inland Empire Utilities Agency
A MUNICIPAL WATER DISTRICT

APPROVED BY:
JASON MARSEILLES, P.E. — JULY 2025
MANAGER OF ENGINEERING — DATE

DESIGN BY: GHD, INC.
APPROVED BY:
CHRIS BARTLEMAN, P.E. — JULY 2025
C81075 — DATE

Inland Empire Utilities Agency

TYPICAL TRENCH DETAIL
FLEXIBLE AND RIGID PIPE

REVISION			
NO.	BY	DATE	APPROVED

C-EW-001

SHEET 1 OF 2

\\ghdnet\ghd\US\Irvine\Projects\111\11181240 IEUA On Call Engineering Serv\Phase 08 - IEUA Standard Details\4- Delivery Documents\1- CAD\Sheets\Civil Standard Details\C-EW-001.dwg May 30, 2025 - 2:28pm

NOTES:

1. FLEXIBLE PIPE REFERS TO ALL STEEL, DUCTILE IRON, AND PLASTIC PIPES. RIGID PIPE REFERS TO ALL TYPES OF REINFORCED AND NON-REINFORCED CONCRETE PIPE AND CLAY PIPE.
2. DEFINITIONS OF FINAL BACKFILL, BEDDING, EMBEDMENT, PIPE AND TRENCH ZONES AND PIPE AND UTILITY BACKFILL REQUIREMENTS SHALL BE IN ACCORDANCE WITH THE SPECIFICATIONS AND GEOTECHNICAL REPORT.
3. TYPICAL TRENCH SECTIONS, (I) VERTICAL TRENCH WALLS, (II) COMBINATION OF VERTICAL AND SLOPING TRENCH WALLS.
4. TRENCH SECTIONS OTHER THAN THE TYPICAL SECTIONS SHOWN MAY BE UTILIZED PROVIDED THAT THEY COMPLY WITH APPLICABLE LOCAL, STATE (CAL-OSHA), AND FEDERAL (OSHA) SAFETY STANDARDS AND REGULATIONS. DOCUMENTATION SUPPORTING THIS COMPLIANCE AND THE PIPE DESIGN CALCULATIONS PREPARED BY A PROFESSIONAL ENGINEER SHALL BE SUBMITTED TO THE ENGINEER.
5. THE NEED FOR TRENCH PROTECTIVE SYSTEMS SHALL BE DETERMINED IN CONSIDERATION OF APPLICABLE LOCAL, (CAL-OSHA), AND FEDERAL (OSHA) SAFETY STANDARDS AND REGULATIONS AND GEOTECHNICAL ENGINEER'S RECOMMENDATIONS.
6. UNSUPPORTED VERTICAL AND/OR SLOPING TRENCH WALLS SHALL NOT BE STEEPER THAN ALLOWED BY APPLICABLE LOCAL, (CAL-OSHA), AND FEDERAL (OSHA) SAFETY STANDARDS AND REGULATIONS UNLESS SUPPORTING DOCUMENTATION IS SUBMITTED ACCORDING TO AFOREMENTIONED SAFETY STANDARDS.
7. PROTECTION SYSTEMS SHALL BE DESIGNED AND CONSTRUCTED IN ACCORDANCE WITH THE APPLICABLE LOCAL, (CAL-OSHA), AND FEDERAL (OSHA) SAFETY STANDARDS AND REGULATIONS. SUPPORTING DOCUMENTATION SHALL BE SUBMITTED TO THE ENGINEER REGARDING THE DESIGN OF SHORING, BRACING, SLOPING OF OTHER PROTECTION SYSTEMS AND THEIR COMPLIANCE WITH APPLICABLE LOCAL, (CAL-OSHA), AND FEDERAL (OSHA) SAFETY STANDARDS.
8. A STAIRWAY, LADDER, RAMP OR OTHER SAFE MEANS OF EGRESS SHALL BE LOCATED IN TRENCH EXCAVATIONS 4.0 FEET OR MORE IN DEPTH SO AS TO REQUIRE NO MORE THAN 25 FEET OF LATERAL TRAVEL FOR EMPLOYEES/WORKERS PER CCR, TITLE 8 SECTION 1541.
9. VOIDS LEFT WHEN REMOVING SHEETING AND SHORING SHALL BE FILLED WITH CONTROLLED LOW STRENGTH MATERIAL IN ACCORDANCE WITH THE SPECIFICATIONS.
10. DETECTABLE METALLIC LOCATING TAPE SHALL BE PLACED ABOVE ALL BURIED PLASTIC PIPELINES AND OTHER PIPELINES THAT ARE NOT COMPRISED AT LEAST IN PART OF MAGNETIC COMPONENTS IN ACCORDANCE WITH THE EARTHWORK AND RESPECTIVE PIPING SECTIONS OF THE SPECIFICATIONS.
11. IF OVER-EXCAVATION DUE TO POOR FOUNDATION MATERIAL IS ORDERED BY THE ENGINEER, THE BACKFILL MATERIAL SHALL BE PROVIDED IN ACCORDANCE WITH THE EARTHWORK SECTION OF THE SPECIFICATIONS.
12. IF DURING CONSTRUCTION, THE WATER TABLE IS DISCOVERED TO BE ABOVE THE TRENCH BOTTOM, THE ENGINEER SHALL BE NOTIFIED, AND APPROPRIATE DEWATERING SHALL BE IMPLEMENTED TO LOWER THE WATER LEVEL BELOW THE TRENCH BOTTOM IN ACCORDANCE WITH THE DEWATERING REQUIREMENTS PROVIDED IN THE SPECIFICATIONS. BACKFILL MATERIAL SHALL BE PROVIDED IN ACCORDANCE WITH THE EARTHWORK SECTION OF THE SPECIFICATIONS OR AS ORDERED BY THE ENGINEER.
13. TRENCH SHALL BE BACKFILLED AT 90% RELATIVE COMPACTION FOR PIPE ZONE AND AT 95% RELATIVE COMPACTION FOR TRENCH ZONE, UNLESS APPROVED BY IEUA.
14. IN PUBLIC RIGHT-OF-WAY, FINAL BACKFILL SHALL COMPLY WITH LOCAL JURISDICTION REQUIREMENTS UNLESS OTHERWISE NOTED BY IEUA.

SCALE: NOT TO SCALE

Inland Empire Utilities Agency
A MUNICIPAL WATER DISTRICT

APPROVED BY:
JASON MARSEILLES, P.E. — JULY 2025
MANAGER OF ENGINEERING — DATE

DESIGN BY: GHD, INC.
APPROVED BY:
CHRIS BARTLEMAN, P.E. — JULY 2025
C81075 — DATE

Inland Empire Utilities Agency

TYPICAL TRENCH DETAIL
FLEXIBLE AND RIGID PIPE

REVISION			
NO.	BY	DATE	APPROVED

C-EW-001

SHEET 2 OF 2

\\ghdnet\ghd\US\Irvine\Projects\111\11181240 IEUA On Call Engineering Serv\Phase 08 - IEUA Standard Details\4- Delivery Documents\1- CAD\Sheets\Civil Standard Details\C-EW-001.dwg May 30, 2025 - 2:29pm

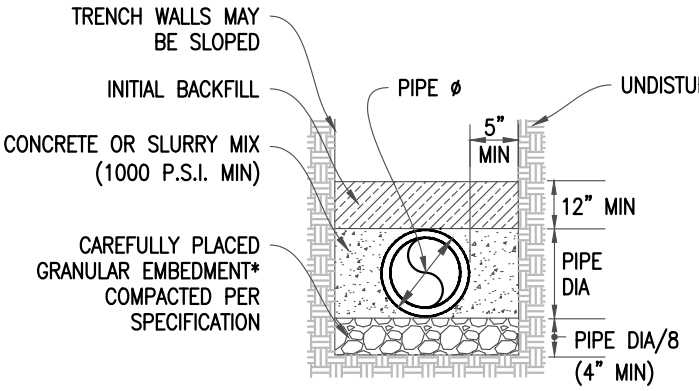

NOTE: THIS TYPE OF CONSTRUCTION REQUIRES THE CONCRETE TO EXTEND FROM THE PIPE TO THE TRENCH WALL.

CAUTION: NOT RECOMMENDED WHERE NATIVE SOILS ARE EXPANSIVE.

LOAD FACTOR: 2.7

CLASS A–III – SIDECRADLING

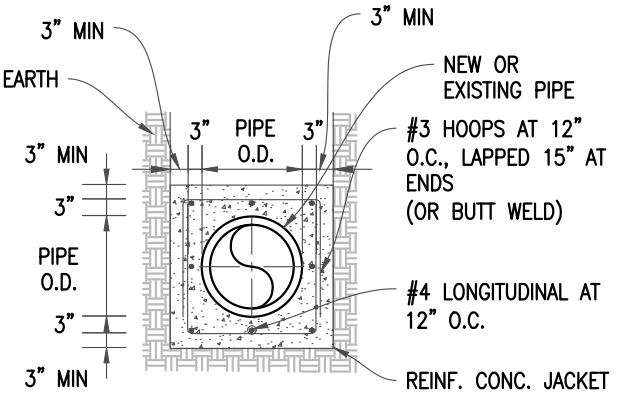

NOTE: DETAIL SHALL BE USED FOR MINIMUM DIMENSIONS ONLY. TOTAL SIZE OF CONCRETE ENCASEMENT IS DEPENDENT ON PIPE SIZE (WEIGHT) AND SOIL BEARING PRESSURE PER PROJECT GEOTECHNICAL REPORT.

LOAD FACTOR: 4.5

CLASS A–IV – CONCRETE ENCASEMENT

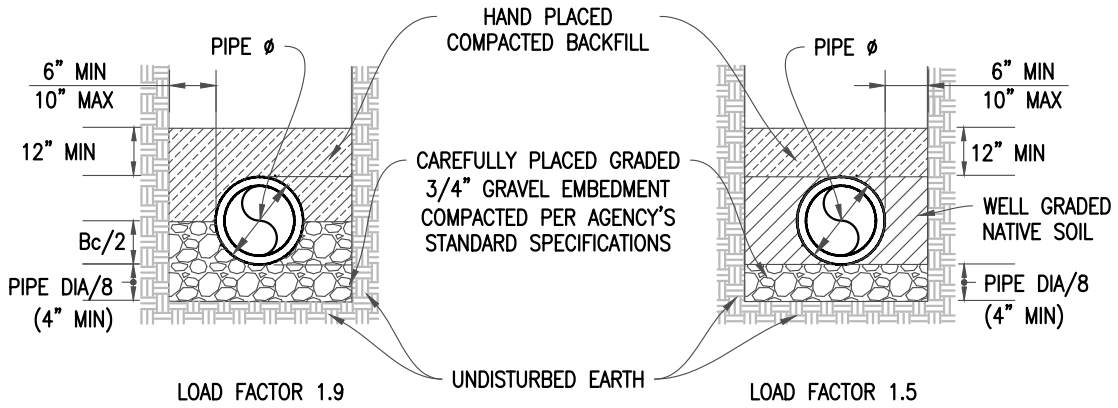

LOAD FACTOR 1.9

CLASS B

LOAD FACTOR 1.5

CLASS C

*GRANULAR EMBEDMENT:

COARSE GRAINED NATIVE SOILS OR IMPORTED SAND WITH A MINIMUM SAND EQUIVALENCE OF 30 AND OF SUCH SIZE THAT 90 TO 100 PERCENT WILL PASS A NO.4 SIEVE AND NO MORE THAN 5 PERCENT WILL PASS A NO. 200 SIEVE.

1. SLAG, PEA GRAVEL, OR OTHER ALTERNATIVE MATERIALS WILL NOT BE ACCEPTABLE IN LIEU OF GRANULAR EMBEDMENT.
2. TRENCH SHORING & TRENCH WALL SLOPING SHALL BE IN CONFORMANCE WITH C–EW–001.
3. MATERIALS, EMBEDMENT, PLACEMENT AND COMPACTION OF GRANULAR EMBEDMENT* AND COMPACTED BACKFILL WILL CONFORM TO THE AGENCY'S STANDARD SPECIFICATION FOR PIPE BEDDING AND TRENCH BACKFILL.
4. CAREFULLY PLACED PIPE BEDDING MATERIAL SHALL BE VIBRATED.

SCALE: NOT TO SCALE

Inland Empire Utilities Agency
A MUNICIPAL WATER DISTRICT

APPROVED BY:
JASON MARSEILLES, P.E. — JULY 2025
MANAGER OF ENGINEERING — DATE

DESIGN BY: GHD, INC.
APPROVED BY:
CHRIS BARTLEMAN, P.E. — JULY 2025
C81075 — DATE

Inland Empire Utilities Agency

ALTERNATIVE PIPE BEDDING DETAILS

REVISION			
NO.	BY	DATE	APPROVED

C–EW–006

SHEET 1 OF 1

\\ghdnet\ghd\US\Irvine\Projects\111\11181240 IEUA On Call Engineering Serv\Phase 08 – IEUA Standard Details\4– Delivery Documents\1– CAD\Sheets\Civil Standard Details\C–EW–006.dwg May 30, 2025 – 2:29pm

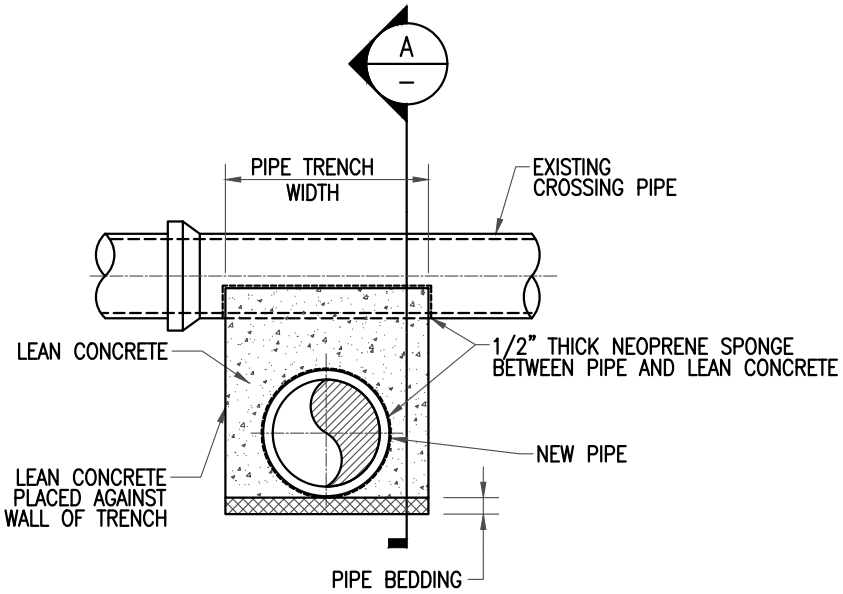

SECTION THRU NEW PIPE TRENCH

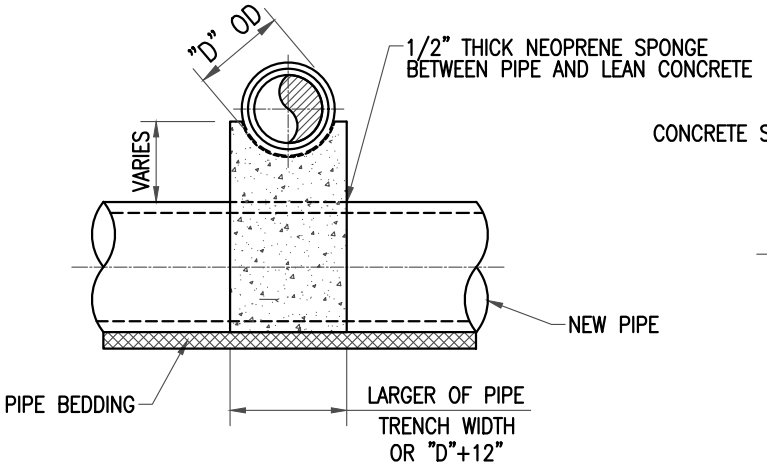

EXISTING PIPE CROSSING SECTION

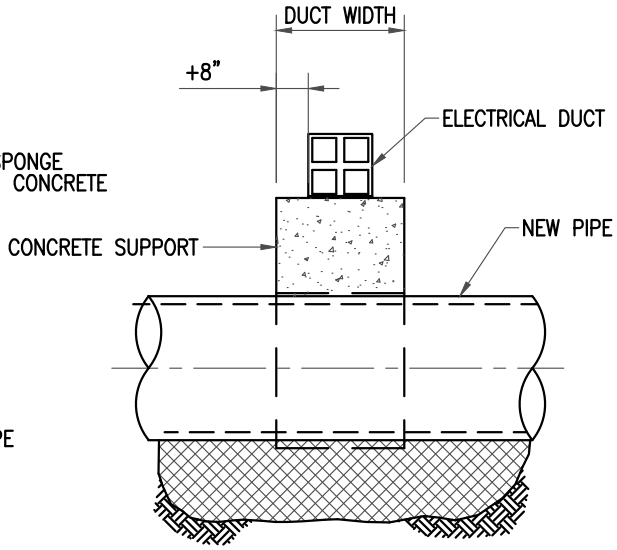

ALTERNATIVE ELECTRICAL DUCT CROSSING SECTION

NOTES:

1. UNDERGROUND UTILITY SUPPORTS SHALL BE PROVIDED WHEN MINIMUM CLEARANCE OF 12 INCHES CANNOT BE PROVIDED.
2. EXISTING PIPE OR DUCT SHALL BE FIRMLY SUPPORTED DURING INSTALLATION OF NEW PIPE AND SUPPORT.

SCALE: NOT TO SCALE

Inland Empire Utilities Agency
A MUNICIPAL WATER DISTRICT

APPROVED BY:
JASON MARSEILLES, P.E. — JULY 2025
MANAGER OF ENGINEERING — DATE

DESIGN BY: GHD, INC.
APPROVED BY:
CHRIS BARTLEMAN, P.E. — JULY 2025
C81075 — DATE

Inland Empire Utilities Agency

UNDERGROUND UTILITY SUPPORT ACROSS TRENCH

REVISION			
NO.	BY	DATE	APPROVED

C-EW-007

SHEET 1 OF 1

\\ghdnet\ghd\US\Irvine\Projects\111\11181240 IEUA On Call Engineering Serv\Phase 08 - IEUA Standard Details\4- Delivery Documents\1- CAD\Sheets\Civil Standard Details\C-EW-007.dwg May 30, 2025 - 2:30pm

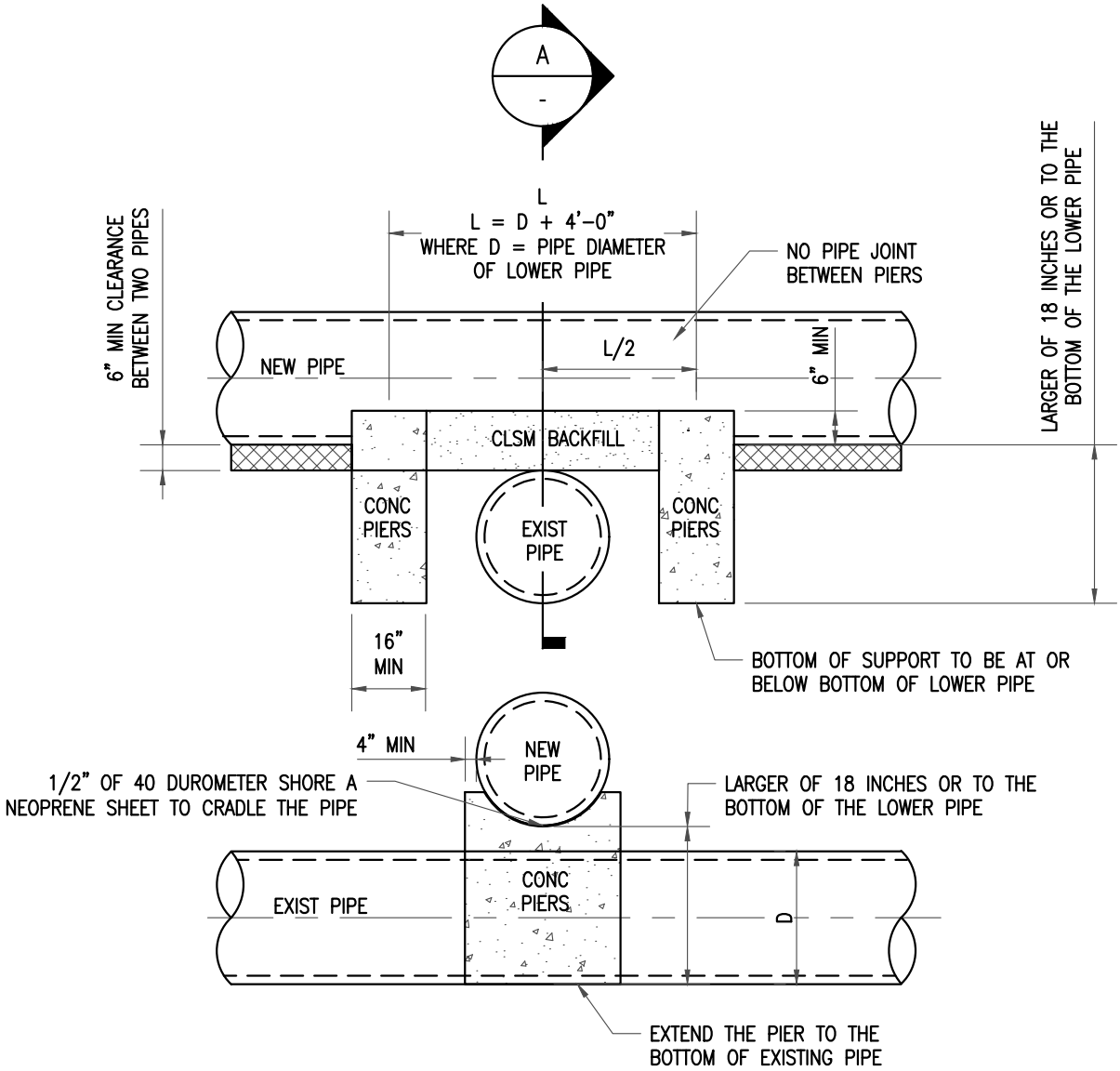

SECTION A

NOTES:

1. PROVIDE PIERS ONLY WHEN LARGE DIAMETER PIPE (15" OR LARGER) CROSSES OVER EXISTING PIPELINE WITH VERTICAL CLEARANCE LESS THAN 12".
2. PIERS SHALL BE CONSTRUCTED ON UNDISTURBED EARTH. CONCRETE SHALL BE LEAN CONCRETE PER ENGINEERING DESIGN GUIDELINES.

SCALE: NOT TO SCALE

Inland Empire Utilities Agency
A MUNICIPAL WATER DISTRICT

APPROVED BY:
JASON MARSEILLES, P.E. — JULY 2025
MANAGER OF ENGINEERING — DATE

DESIGN BY: GHD, INC.
APPROVED BY:
CHRIS BARTLEMAN, P.E. — JULY 2025
C81075 — DATE

Inland Empire Utilities Agency

UNDERGROUND UTILITY SUPPORT
CONCRETE PIERS

REVISION			
NO.	BY	DATE	APPROVED

C-EW-008

SHEET 1 OF 1

\\ghdnet\ghd\US\Irvine\Projects\111\11181240 IEUA On Call Engineering Serv\Phase 08 - IEUA Standard Details\4- Delivery Documents\1- CAD\Sheets\Civil Standard Details\C-EW-008.dwg May 30, 2025 - 2:30pm

MANHOLE DIMENSIONAL DATA		
MANHOLE DIAMETER	TYPE	MAX PIPE OUTSIDE DIAMETER
48"	PRECAST CONCRETE	22"
60"	PRECAST CONCRETE	32"
72"	PRECAST CONCRETE	38"
84"	PRECAST CONCRETE	44"
96"	PRECAST CONCRETE	50"

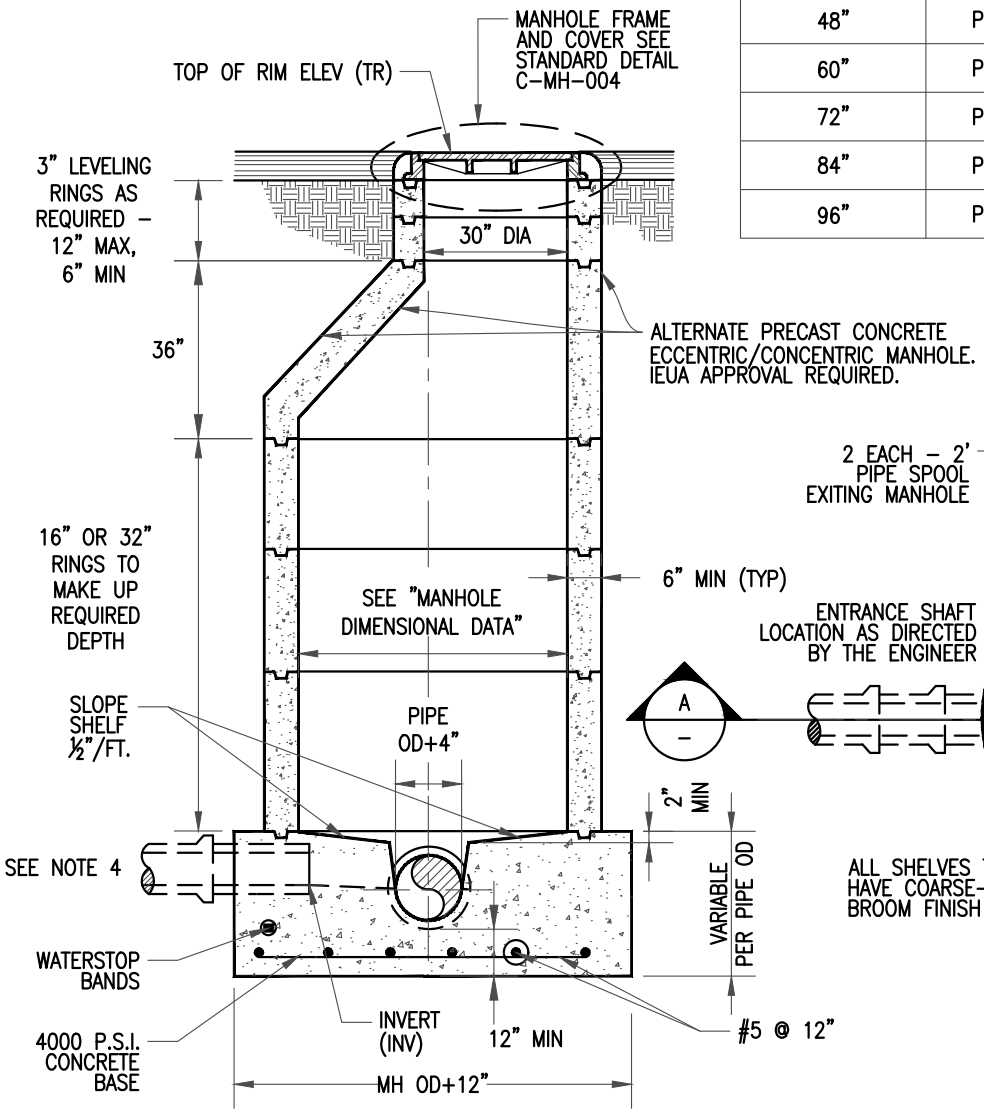

SECTION A–A

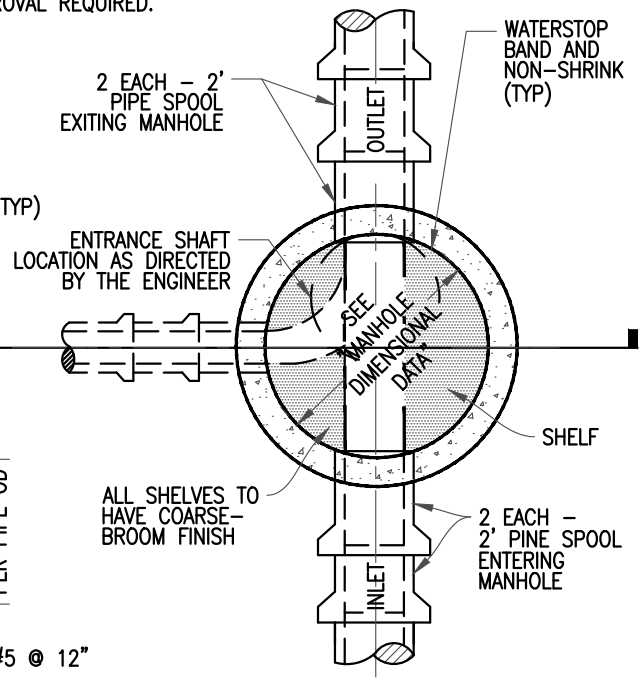

PLAN

NOTES:

1. PRECAST MANHOLE SHALL CONFORM TO THE REQUIREMENTS OF AASHTO MINIMUM H–20 LOADING, OR AS DIRECTED BY IEUA.
2. MATERIALS, EMBEDMENT, PLACEMENT, AND COMPACTION OF GRANULAR EMBEDMENT AND COMPACTED BACKFILL WILL CONFORM TO THE AGENCY'S STANDARD SPECIFICATIONS FOR PIPE BEDDING AND TRENCH BACKFILL.
3. LINE INTERIOR SURFACES OF MANHOLE AND MANHOLE BASE WITH POLYURETHANE (RAVEN 405 OR APPROVED EQUAL). APPLY NON–SKID SURFACE ON TOTAL SHELF AREA.
4. SOFFIT OF INCOMING PIPE SHALL MATCH OUTLET PIPE SOFFIT.
5. IEUA APPROVAL REQUIRED PRIOR TO CONNECTING AT MANHOLE.

SCALE: NOT TO SCALE

Inland Empire Utilities Agency
A MUNICIPAL WATER DISTRICT

APPROVED BY:
JASON MARSEILLES, P.E. — JULY 2025
MANAGER OF ENGINEERING — DATE

DESIGN BY: GHD, INC.
APPROVED BY:
CHRIS BARTLEMAN, P.E. — JULY 2025
C81075 — DATE

Inland Empire Utilities Agency

TYPICAL SEWER MANHOLE DETAIL

REVISION			
NO.	BY	DATE	APPROVED

C-MH-001

SHEET 1 OF 1

\\ghdnet\ghd\US\Irvine\Projects\111\11181240 IEUA On Call Engineering Serv\Phase 08 – IEUA Standard Details\4– Delivery Documents\1– CAD\Sheets\Civil Standard Details\C-MH-001.dwg May 30, 2025 – 2:31pm

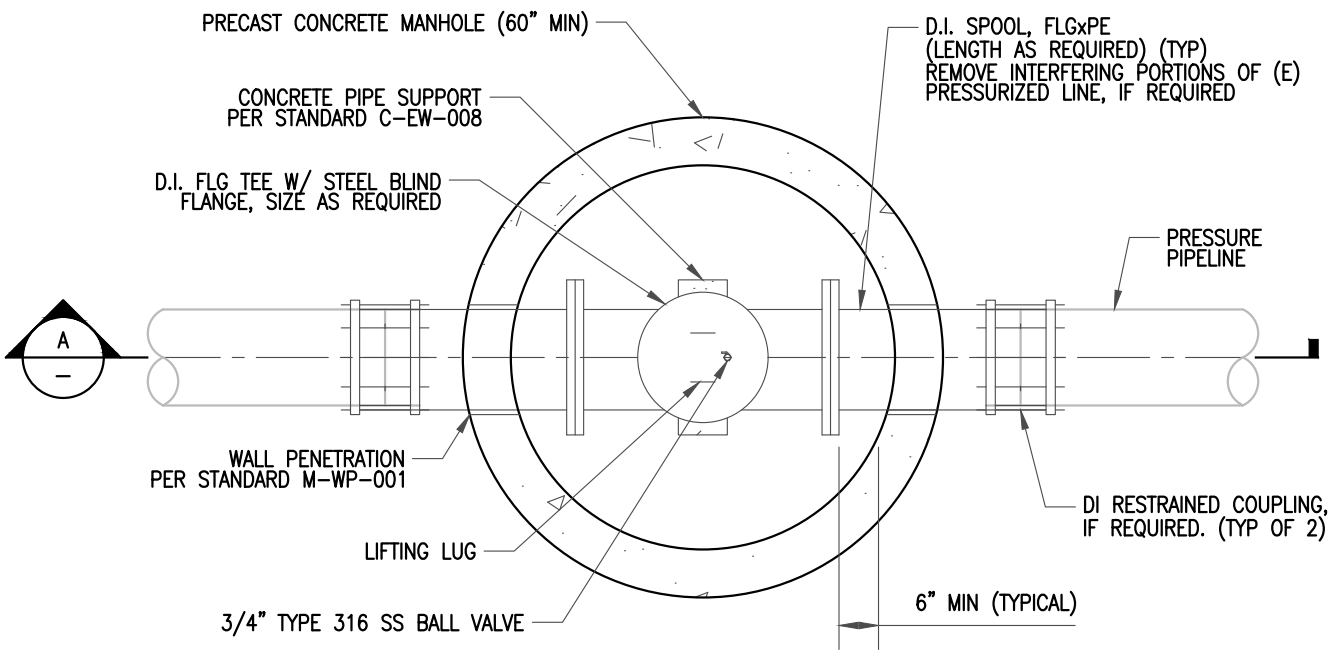

PLAN

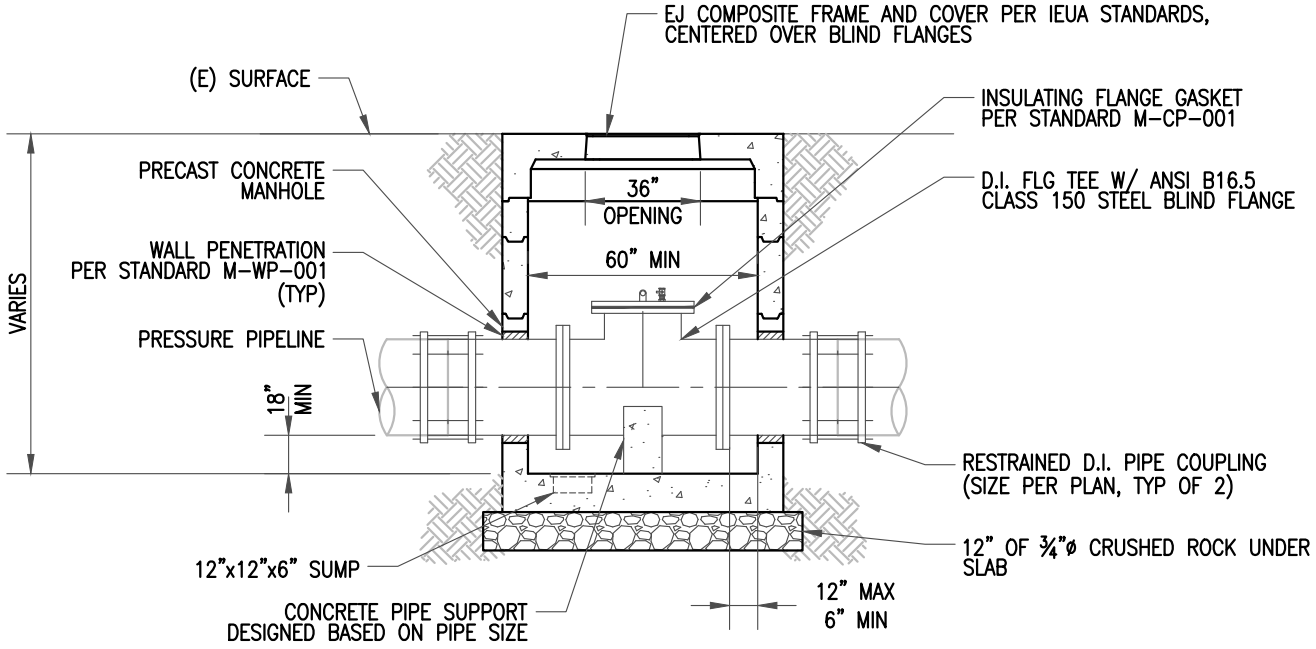

ACCESS VAULT

SECTION A

SCALE: NOT TO SCALE

Inland Empire Utilities Agency
A MUNICIPAL WATER DISTRICT

APPROVED BY:

JASON MARSEILLES, P.E. — JULY 2025
MANAGER OF ENGINEERING — DATE

DESIGN BY: GHD, INC.

APPROVED BY:

CHRIS BARTLEMAN, P.E. — JULY 2025
C81075 — DATE

Inland Empire Utilities Agency

PRESSURE PIPE ACCESS DETAIL

REVISION			
NO.	BY	DATE	APPROVED

C-MH-002

SHEET 1 OF 2

\\ghdnet\ghd\US\Irvine\Projects\111\11181240 IEUA On Call Engineering Serv\Phase 08 - IEUA Standard Details\4- Delivery Documents\1- CAD\Sheets\Civil Standard Details\C-MH-002.dwg May 30, 2025 - 2:31pm

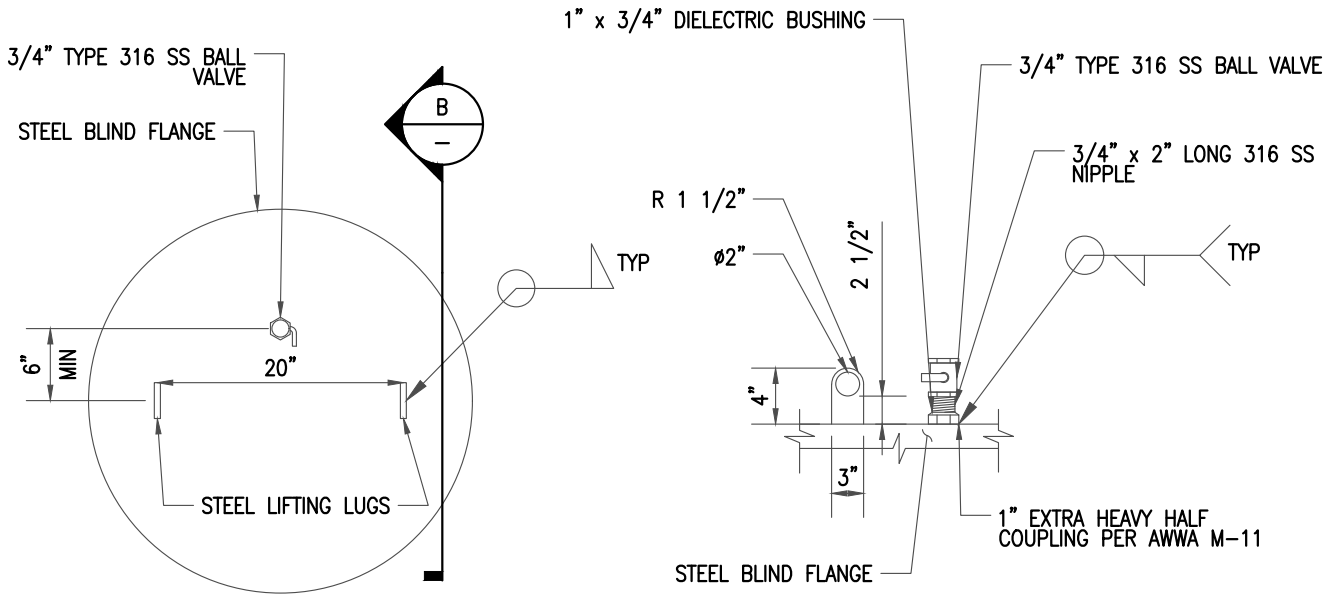

PLAN

SECTION B

LIFTING LUG AND PRESSURE GAUGE DETAIL

NOTES:

1. ALL DI PIPING SHALL BE THICKNESS CLASS 52 OR PRESSURE CLASS 250, UNLESS NOTED OTHERWISE BY IEUA, AND SHALL BE LINED WITH PROTECTO 401 AND COATED.
2. DI FLANGES SHALL ANSI B16.1 CLASS 125.
3. COVER ON PLAN VIEW NOT SHOWN FOR CLARITY.
4. SLOPE CONCRETE FLOOR 0.50% TO SUMP.
5. FRAME AND COVER SHALL BE TRAFFIC-RATED TO AASHTO H-20 AND H-25 LOADING.

SCALE: NOT TO SCALE

Inland Empire Utilities Agency
A MUNICIPAL WATER DISTRICT

APPROVED BY:
JASON MARSEILLES, P.E. — JULY 2025
MANAGER OF ENGINEERING — DATE

DESIGN BY: GHD, INC.
APPROVED BY:
CHRIS BARTLEMAN, P.E. — JULY 2025
C81075 — DATE

Inland Empire Utilities Agency

PRESSURE PIPE ACCESS DETAIL

REVISION			
NO.	BY	DATE	APPROVED

C-MH-002

SHEET 2 OF 2

\\ghdnet\ghd\US\Irvine\Projects\111\11181240 IEUA On Call Engineering Serv\Phase 08 - IEUA Standard Details\4- Delivery Documents\1- CAD\Sheets\Civil Standard Details\C-MH-002.dwg May 30, 2025 - 2:31pm

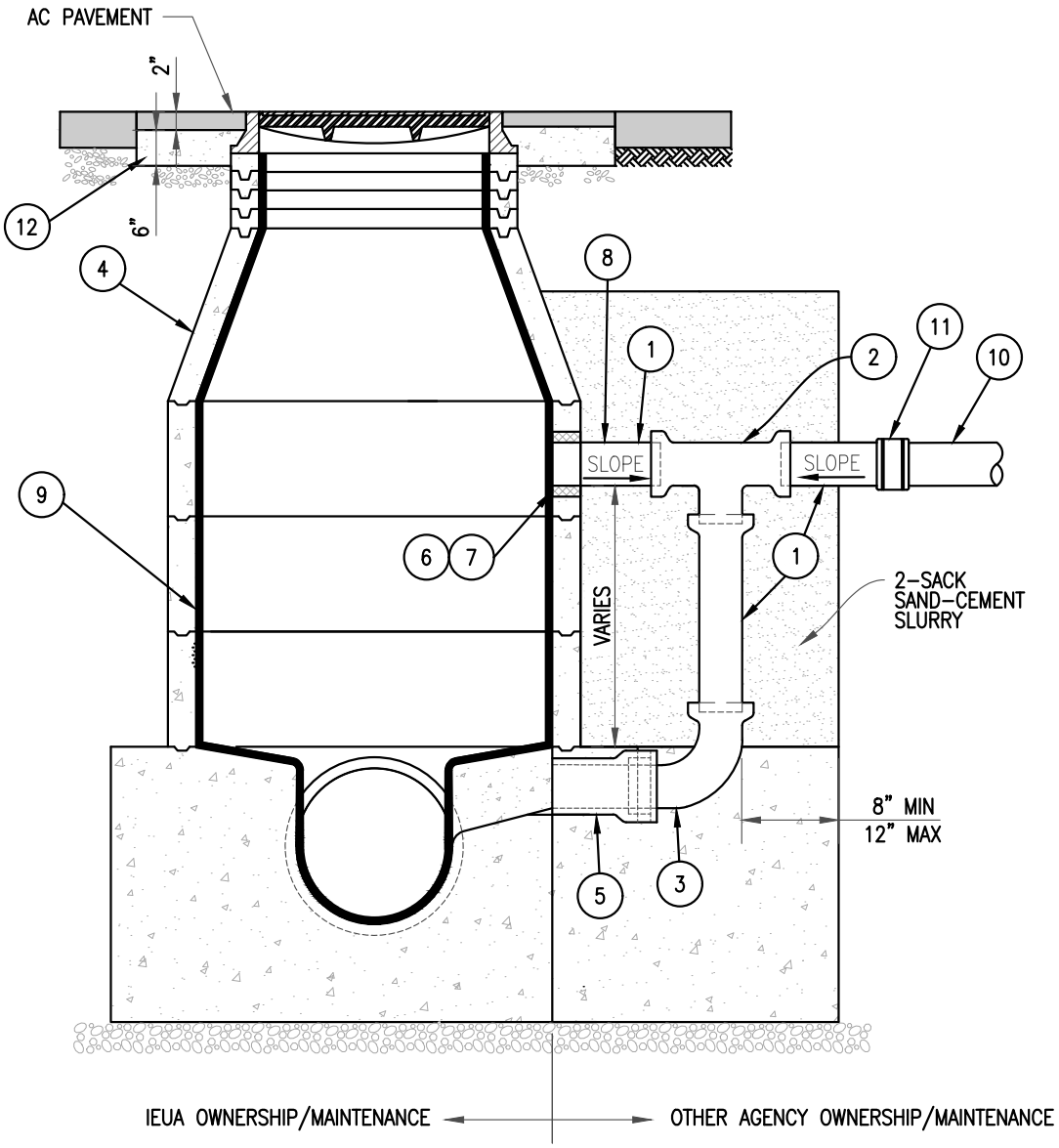

SCALE: NOT TO SCALE

Inland Empire Utilities Agency
A MUNICIPAL WATER DISTRICT

APPROVED BY:

JASON MARSEILLES, P.E. — JULY 2025
MANAGER OF ENGINEERING — DATE

DESIGN BY: GHD, INC.

APPROVED BY:
CHRIS BARTLEMAN, P.E. — JULY 2025
C81075 — DATE

Inland Empire Utilities Agency

DROP
MANHOLE

REVISION			
NO.	BY	DATE	APPROVED

C-MH-003

SHEET 1 OF 2

\\ghdnet\ghd\US\Irvine\Projects\111\11181240 IEUA On Call Engineering Serv\Phase 08 - IEUA Standard Details\4- Delivery Documents\1- CAD\Sheets\Civil Standard Details\C-MH-003.dwg May 30, 2025 - 2:32pm

ITEM	MATERIALS
1	SDR-26 PVC PIPE. SIZE AS REQUIRED.
2	SDR-26 PVC TEE, BELL X BELL. SIZE AS REQUIRED.
3	SDR-26 PVC LONG RADIUS 90-DEGREE BEND BELL x SPIGOT END. SIZE AS REQUIRED.
4	STANDARD MANHOLE PER IEUA STANDARD C-MH-001.
5	INSTALL SDR-26 PVC PIPE CONNECTION TO MANHOLE BASE PER IEUA STANDARD C-MH-001.
6	CORE DRILL MANHOLE SHAFT. FILL ANNULAR SPACE WITH DRY PACK GROUT.
7	REPAIR MANHOLE LINING TO THE SATISFACTION OF IEUA.
8	SLOPE PIPE TO FALL 1/2" TOWARD TEE.
9	LINE INTERIOR SURFACES OF MANHOLE AND MANHOLE BASE WITH POLYURETHANE (RAVEN 405 OR APPROVED EQUAL). APPLY NON-SKID SURFACE ON TOTAL SHELF AREA.
10	EXTRA-STRENGTH VCP
11	TRANSITION BAND SEAL COUPLING.
12	560-C-3250 CONCRETE COLLAR (ROUND). SEE NOTE 5.

NOTES:

1. DROP MANHOLE SHALL BE APPROVED BY IEUA WHEN JUSTIFICATION IS PROVIDED SHOWING NO ALTERNATIVES ARE AVAILABLE.
2. FOR MANHOLE CONSTRUCTION NOTES AND DETAILS NOT SHOWN, SEE IEUA STANDARD C-MH-001.
3. CONSTRUCT CLEANOUTS OF THE SAME DIAMETER (4", 6" OR 8") AND MATERIAL AS THE SEWER LATERAL.
4. USE SDR 35 PIPE AND FITTINGS WHERE COVER OVER PIPE EXCEEDS 5-FT AND SDR 26 WHERE COVER IS 5-FT OR LESS.
5. IF LOCATED IN CONCRETE PAVEMENT, CONSTRUCT 6" THICK ROUND COLLAR FLUSH WITH PAVEMENT.
6. PIPE CONNECTIONS USED FOR DROP MANHOLES INTO IEUA FACILITIES SHALL BE MAINTAINED BY THE CONNECTING AGENCY. IEUA DOES NOT TAKE OWNERSHIP OR MAINTENANCE RESPONSIBILITY OUTSIDE OF THE MANHOLE.

SCALE: NOT TO SCALE

Inland Empire Utilities Agency
A MUNICIPAL WATER DISTRICT

APPROVED BY:
JASON MARSEILLES, P.E. — JULY 2025
MANAGER OF ENGINEERING — DATE

DESIGN BY: GHD, INC.
APPROVED BY:
CHRIS BARTLEMAN, P.E. — JULY 2025
C81075 — DATE

Inland Empire Utilities Agency

DROP MANHOLE

REVISION			
NO.	BY	DATE	APPROVED

C-MH-003

SHEET 2 OF 2

\\ghdnet\ghd\US\Irvine\Projects\111\11181240 IEUA On Call Engineering Serv\Phase 08 - IEUA Standard Details\4- Delivery Documents\1- CAD\Sheets\Civil Standard Details\C-MH-003.dwg May 30, 2025 - 2:32pm

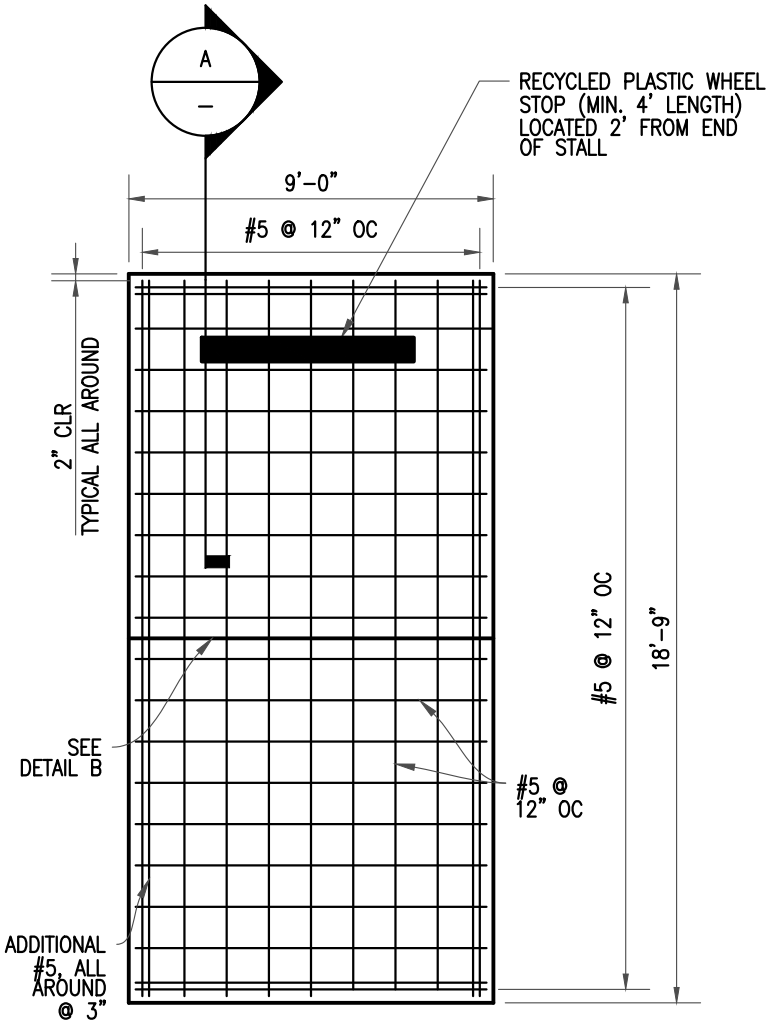

PLAN – 1 STALL

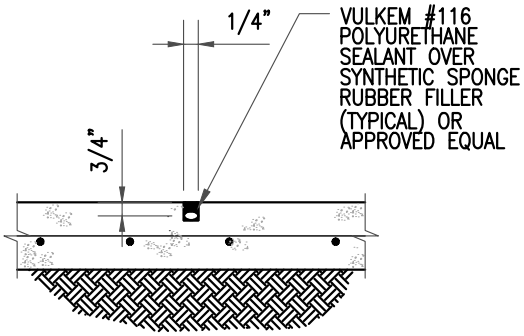

CONTROL JOINT

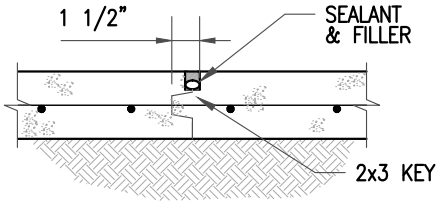

CONSTRUCTION JOINT

NOTES:

1. PROVIDE CONSTRUCTION OR CONTROL JOINT @ 13'–6" O.C. MAX. CONSTRUCTION JOINTS SHALL BE INSTALLED AS INDICATED.

JOINTS IN REINFORCED CONCRETE EXTERIOR PAVEMENTS & SIDEWALKS

DETAIL B

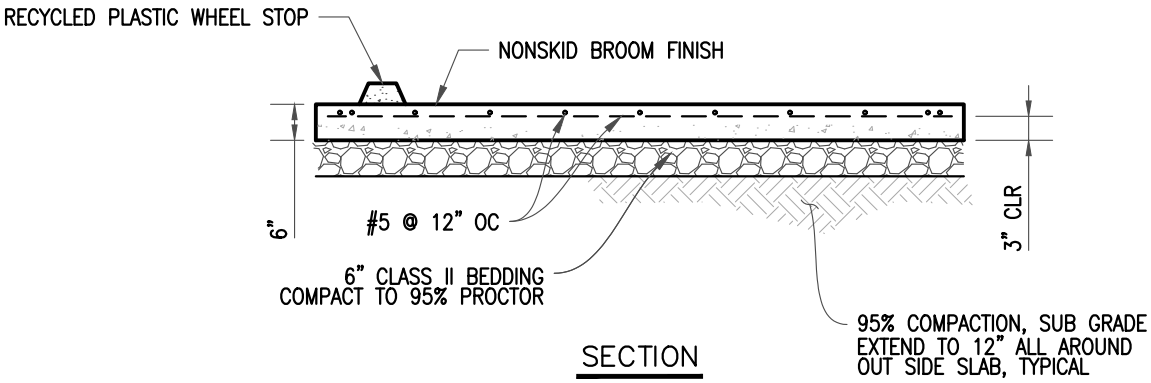

SECTION

DETAIL A

SCALE: NOT TO SCALE

Inland Empire Utilities Agency
A MUNICIPAL WATER DISTRICT

APPROVED BY:
JASON MARSEILLES, P.E. — JULY 2025
MANAGER OF ENGINEERING — DATE

DESIGN BY: GHD, INC.
APPROVED BY:
CHRIS BARTLEMAN, P.E. — JULY 2025
C81075 — DATE

Inland Empire Utilities Agency

PARKING STALL AND SLAB

REVISION			
NO.	BY	DATE	APPROVED

C-PS-001

SHEET 1 OF 3

\\ghdnet\ghd\US\Irvine\Projects\111\11181240 IEUA On Call Engineering Serv\Phase 08 – IEUA Standard Details\4– Delivery Documents\1– CAD\Sheets\Civil Standard Details\C-PS-001.dwg May 30, 2025 – 2:33pm

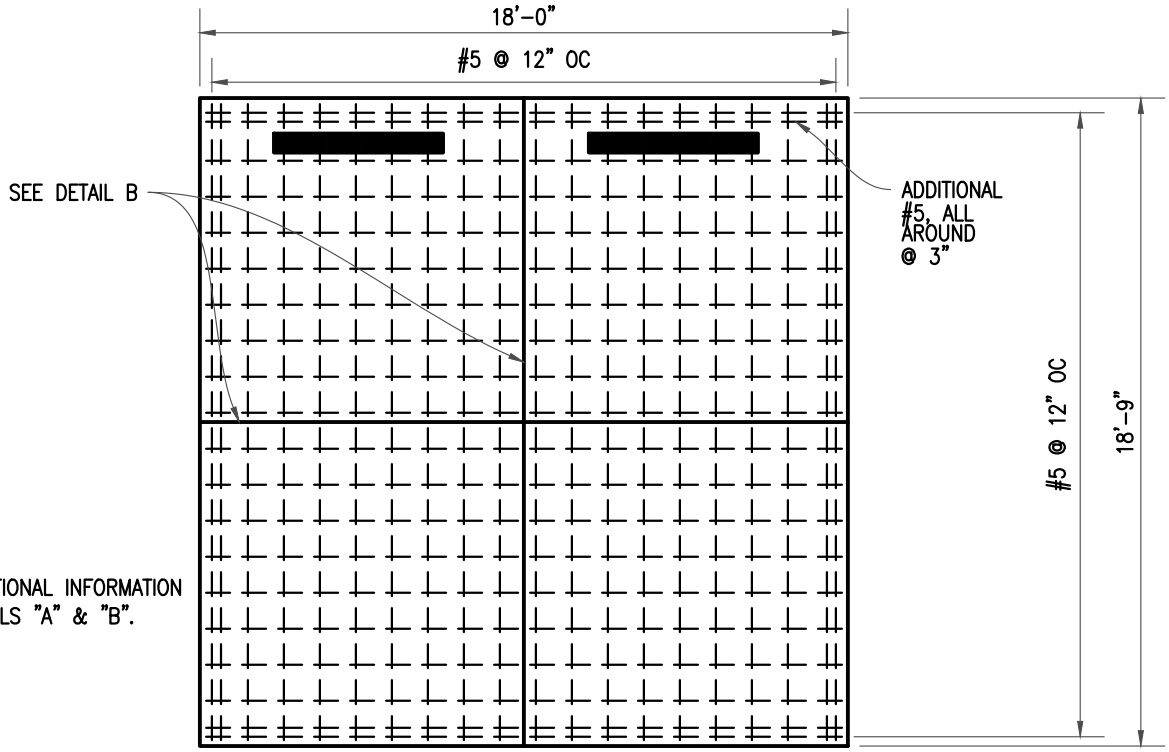

NOTES:

1. FOR ADDITIONAL INFORMATION SEE DETAILS "A" & "B".

PLAN – 2 STALL

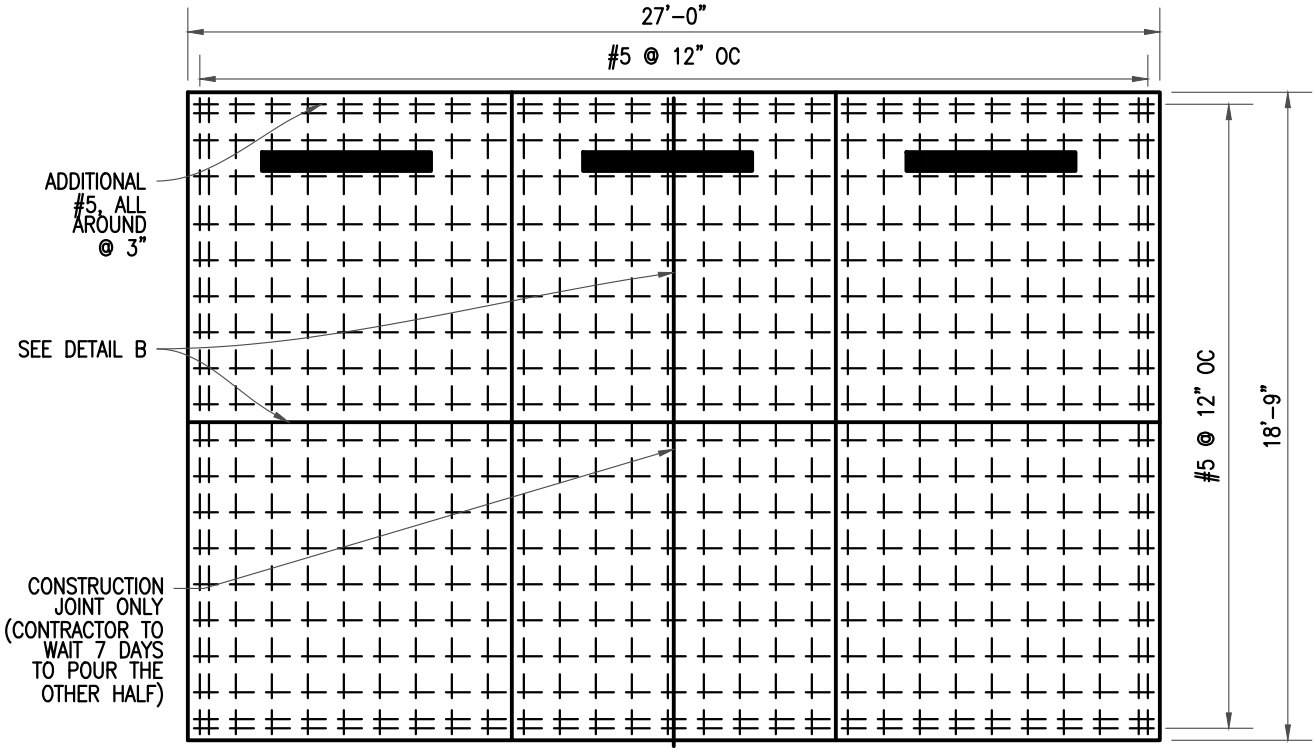

PLAN – 3 STALL

SCALE: NOT TO SCALE

Inland Empire Utilities Agency
A MUNICIPAL WATER DISTRICT

APPROVED BY:

JASON MARSEILLES, P.E. — JULY 2025
MANAGER OF ENGINEERING — DATE

DESIGN BY: GHD, INC.

APPROVED BY:

CHRIS BARTLEMAN, P.E. — JULY 2025
C81075 — DATE

Inland Empire Utilities Agency

PARKING STALL AND SLAB

REVISION			
NO.	BY	DATE	APPROVED

C-PS-001

SHEET 2 OF 3

\\ghdnet\ghd\US\Irvine\Projects\111\11181240 IEUA On Call Engineering Serv\Phase 08 - IEUA Standard Details\4- Delivery Documents\1- CAD\Sheets\Civil Standard Details\C-PS-001.dwg May 30, 2025 - 2:33pm

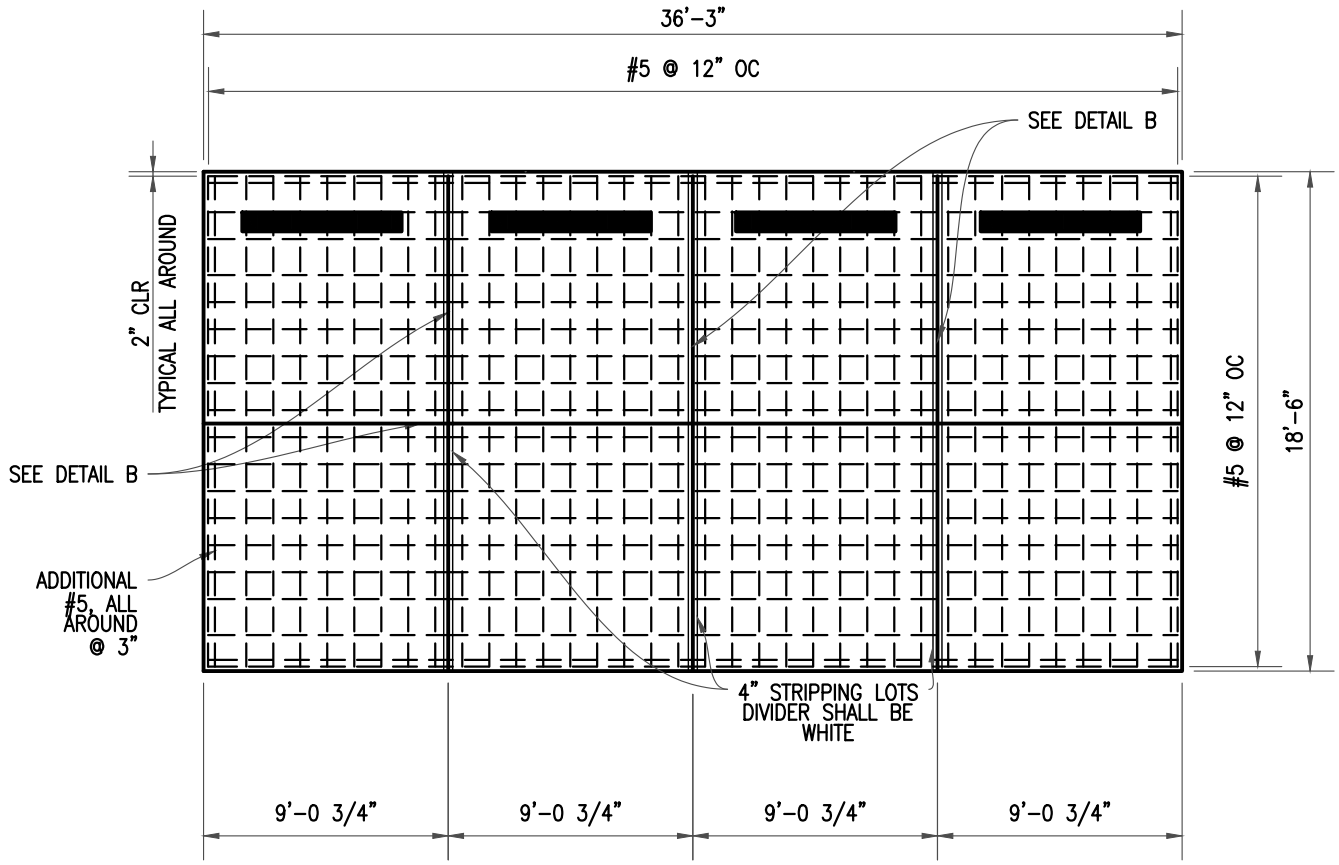

PLAN – 4 STALL

NOTES:

1. DATE STAMP EACH CONCRETE SLAB, TO MATCH SIZE/STYLE OF EXISTING.
2. STRIPE PARKING STALL USING WHITE WITH REFLECTIVE GLASS BEADS PAINT. PER SECTION 214 OF THE STANDARD SPECIFICATIONS FOR PUBLIC WORKS CONSTRUCTION AND PROJECT SPECIFICATIONS.
3. REMOVE AND REINSTALL WHEEL STOPS. COORDINATE INSTALLATION WITH AGENCY.
4. CONTRACTOR SHALL REMOVE TREE ROOTS (12" CLEARANCE FROM SLAB) THAT MAY EXIST IN THE AREA AND ADD ROOT BARRIERS.

SCALE: NOT TO SCALE

Inland Empire Utilities Agency
A MUNICIPAL WATER DISTRICT

APPROVED BY:
JASON MARSEILLES, P.E. — JULY 2025
MANAGER OF ENGINEERING — DATE

DESIGN BY: GHD, INC.
APPROVED BY:
CHRIS BARTLEMAN, P.E. — JULY 2025
C81075 — DATE

Inland Empire Utilities Agency

PARKING STALL AND SLAB

REVISION			
NO.	BY	DATE	APPROVED

C-PS-001

SHEET 1 OF 3

\\ghdnet\ghd\US\Irvine\Projects\111\11181240 IEUA On Call Engineering Serv\Phase 08 - IEUA Standard Details\4- Delivery Documents\1- CAD\Sheets\Civil Standard Details\C-PS-001.dwg May 30, 2025 - 2:33pm

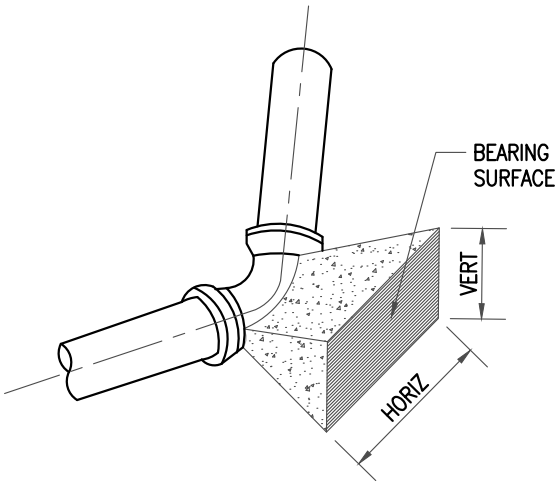

TYPICAL BEARING SURFACE

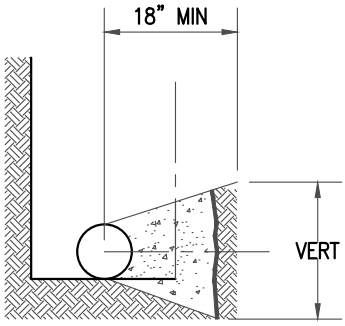

TYPICAL PROFILE

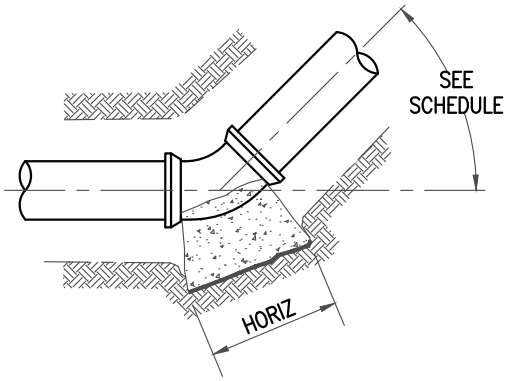

TYPICAL BEND

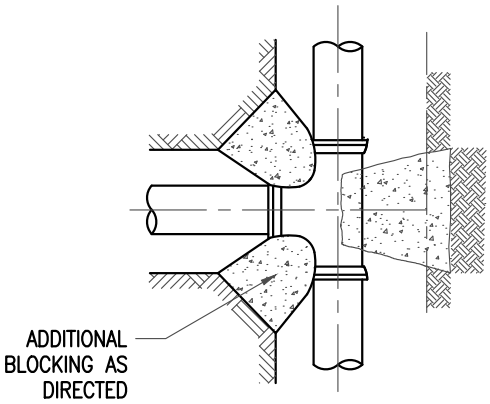

TEE OR VALVE

FOR MINIMUM SIZE OF THRUST BLOCK BEARING SURFACE AND ADDITIONAL NOTES – SEE SHEET 3

SCALE: NOT TO SCALE

Inland Empire Utilities Agency
A MUNICIPAL WATER DISTRICT

APPROVED BY:
JASON MARSEILLES, P.E. — JULY 2025
MANAGER OF ENGINEERING — DATE

DESIGN BY: GHD, INC.
APPROVED BY:
CHRIS BARTLEMAN, P.E. — JULY 2025
C81075 — DATE

Inland Empire Utilities Agency

THRUST BLOCK DETAILS

REVISION			
NO.	BY	DATE	APPROVED

C-RS-001

SHEET 1 OF 4

\\ghdnet\ghd\US\Irvine\Projects\111\11181240 IEUA On Call Engineering Serv\Phase 08 - IEUA Standard Details\4- Delivery Documents\1- CAD\Sheets\Civil Standard Details\C-RS-001.dwg May 30, 2025 - 2:33pm

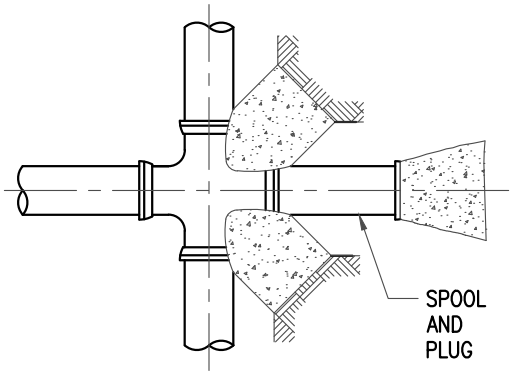

CROSS

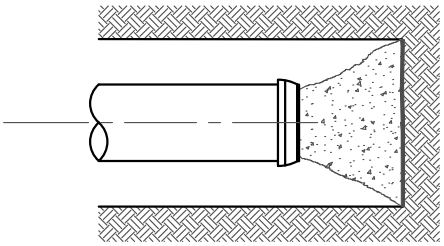

END CAP

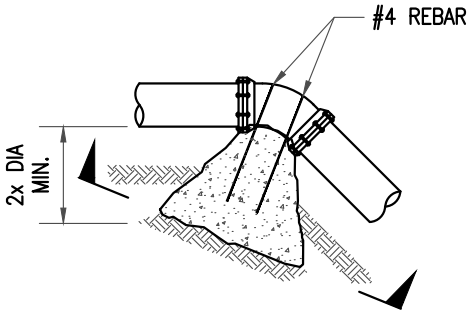

ELEVATION

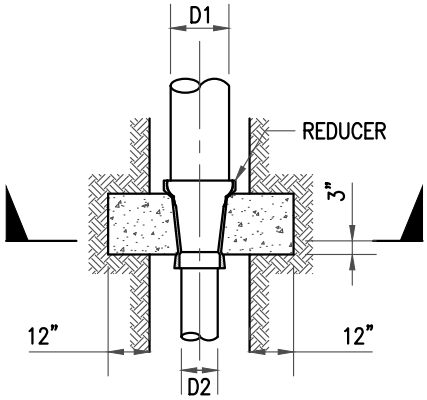

PLAN

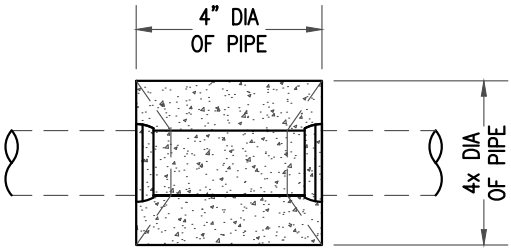

SECTION

VERTICAL BEND

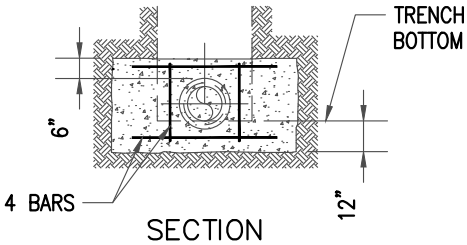

SECTION

REDUCER

FOR MINIMUM SIZE OF THRUST BLOCK BEARING SURFACE AND ADDITIONAL NOTES – SEE SHEET 3

SCALE: NOT TO SCALE

Inland Empire Utilities Agency
A MUNICIPAL WATER DISTRICT

APPROVED BY:

JASON MARSEILLES, P.E. — JULY 2025
MANAGER OF ENGINEERING — DATE

DESIGN BY: GHD, INC.

APPROVED BY:
CHRIS BARTLEMAN, P.E. — JULY 2025
C81075 — DATE

Inland Empire Utilities Agency

THRUST BLOCK DETAILS

REVISION			
NO.	BY	DATE	APPROVED

C-RS-001

SHEET 2 OF 4

\\ghdnet\ghd\US\Irvine\Projects\111\11181240 IEUA On Call Engineering Serv\Phase 08 - IEUA Standard Details\4- Delivery Documents\1- CAD\Sheets\Civil Standard Details\C-RS-001.dwg May 30, 2025 - 2:34pm

NOTES:

1. THRUST BLOCK BEARING AREA BASED ON ALLOWABLE SOIL BEARING VALUE OF 1500 psf AND 225 psi LINE PRESSURE WITH 3'-0" COVER MINIMUM.
   FOR SOIL BEARING VALUE = 1000 psf, 1.5 X AREA SHOWN
   FOR SOIL BEARING VALUE = 500 psf, 3.0 X AREA SHOWN
2. ALL THRUST BLOCKS SHALL BE CLASS "B" CONCRETE AND PLACED AGAINST UNDISTURBED SOIL. DESIGN ENGINEER SHALL DETERMINE SIZES NOT SHOWN.
3. THRUST BLOCKS ON CROSSES SHALL BE USED ONLY WHEN THERE IS A STUB-OUT ON ONE OR MORE SIDES.
4. REINFORCING STEEL SHALL CONFORM TO ASTM A15 AND A305 INTERMEDIATE GRADE.
5. CONCRETE SHALL NOT EXTEND ONTO FLANGE OR ADJOINING PIPE.
6. REBAR TIES AROUND PIPE SHALL BE EPOXY COATED.
7. PIPE SIZES LARGER THAN 16" SHALL REQUIRE ENGINEERING CALCULATIONS.
8. H = HORIZONTAL
   V = VERTICAL

MINIMUM SIZE OF THRUST BLOCK BEARING SURFACE

PIPE SIZE	11 1/4" BEND		22 1/2" BEND		45° BEND		90° BEND		TEE AND PLUGGED END	
	H	V	H	V	H	V	H	V	H	V
4"	1'-1"	0'-9"	1'-7"	1'-0"	2'-2"	1'-5"	3'-0"	1'-11"	2'-6"	1'-7"
6"	1'-7"	1'-0"	2'-3"	1'-5"	3'-2"	2'-0"	4'-4"	2'-9"	3'-8"	2'-4"
8"	2'-1"	1'-4"	3'-0"	1'-11"	4'-2"	2'-8"	5'-8"	3'-7"	4'-9"	3'-1"
10"	2'-7"	1'-8"	3'-8"	2'-4"	5'-1"	3'-3"	6'-11"	4'-5"	5'-10"	3'-9"
12"	3'-1"	2'-0"	4'-4"	2'-9"	6'-1"	3'-11"	8'-3"	5'-3"	6'-11"	4'-5"
16"	4'-1"	2'-7"	5'-9"	3'-8"	8'-0"	5'-1"	10'-10"	7'-0"	9'-2"	5'-10"

SCALE: NOT TO SCALE

Inland Empire Utilities Agency
A MUNICIPAL WATER DISTRICT

APPROVED BY:
JASON MARSEILLES, P.E. — JULY 2025
MANAGER OF ENGINEERING — DATE

DESIGN BY: GHD, INC.
APPROVED BY:
CHRIS BARTLEMAN, P.E. — JULY 2025
C81075 — DATE

Inland Empire Utilities Agency

THRUST BLOCK DETAILS

REVISION			
NO.	BY	DATE	APPROVED

C-RS-001

SHEET 3 OF 4

\\ghdnet\ghd\US\Irvine\Projects\111\11181240 IEUA On Call Engineering Serv\Phase 08 - IEUA Standard Details\4- Delivery Documents\1- CAD\Sheets\Civil Standard Details\C-RS-001.dwg May 30, 2025 - 2:34pm

MINIMUM SIZE OF THRUST BLOCK BEARING SURFACE

D1 x D2 (IN)	TRENCH WIDTH* (IN)	H (IN)	V (IN)	MIN. BEARING AREA (FT^2)
6x4	24	27	41	4.3
8x4	24	37	55	10.4
8x6	24	31	46	6.1
10x4	30	47	70	17.7
10x6	30	42	63	13.4
10x8	30	34	52	7.3
12x4	30	56	83	26.7
12x6	30	52	77	22.4
12x8	30	46	69	16.3
12x10	30	37	56	9.0
16x8	36	67	100	39.0
16x10	36	61	92	31.7
16x12	36	54	81	22.7

*IF A DIFFERENT TRENCH WIDTH IS USED, THE THRUST BLOCK SHALL MAINTAIN THE MINIMUM BEARING AREA SHOWN.

SCALE: NOT TO SCALE

Inland Empire Utilities Agency
A MUNICIPAL WATER DISTRICT

APPROVED BY:
JASON MARSEILLES, P.E. — JULY 2025
MANAGER OF ENGINEERING — DATE

DESIGN BY: GHD, INC.
APPROVED BY:
CHRIS BARTLEMAN, P.E. — JULY 2025
C81075 — DATE

Inland Empire Utilities Agency

THRUST BLOCK DETAILS

REVISION			
NO.	BY	DATE	APPROVED

C-RS-001

SHEET 4 OF 4

\\ghdnet\ghd\US\Irvine\Projects\111\11181240 IEUA On Call Engineering Serv\Phase 08 - IEUA Standard Details\4- Delivery Documents\1- CAD\Sheets\Civil Standard Details\C-RS-001.dwg May 30, 2025 - 2:34pm

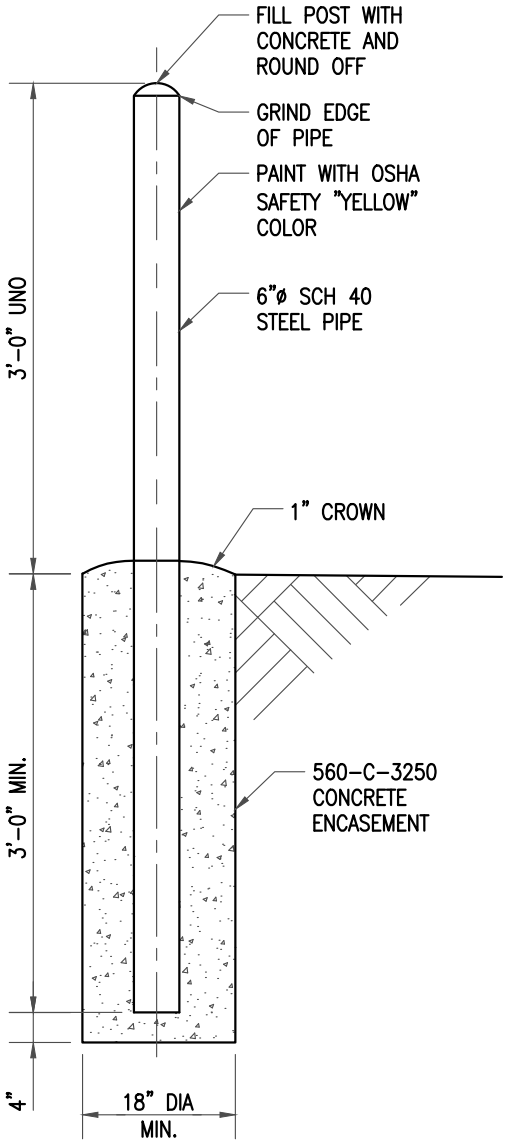

TYPE A:

PERMANENT

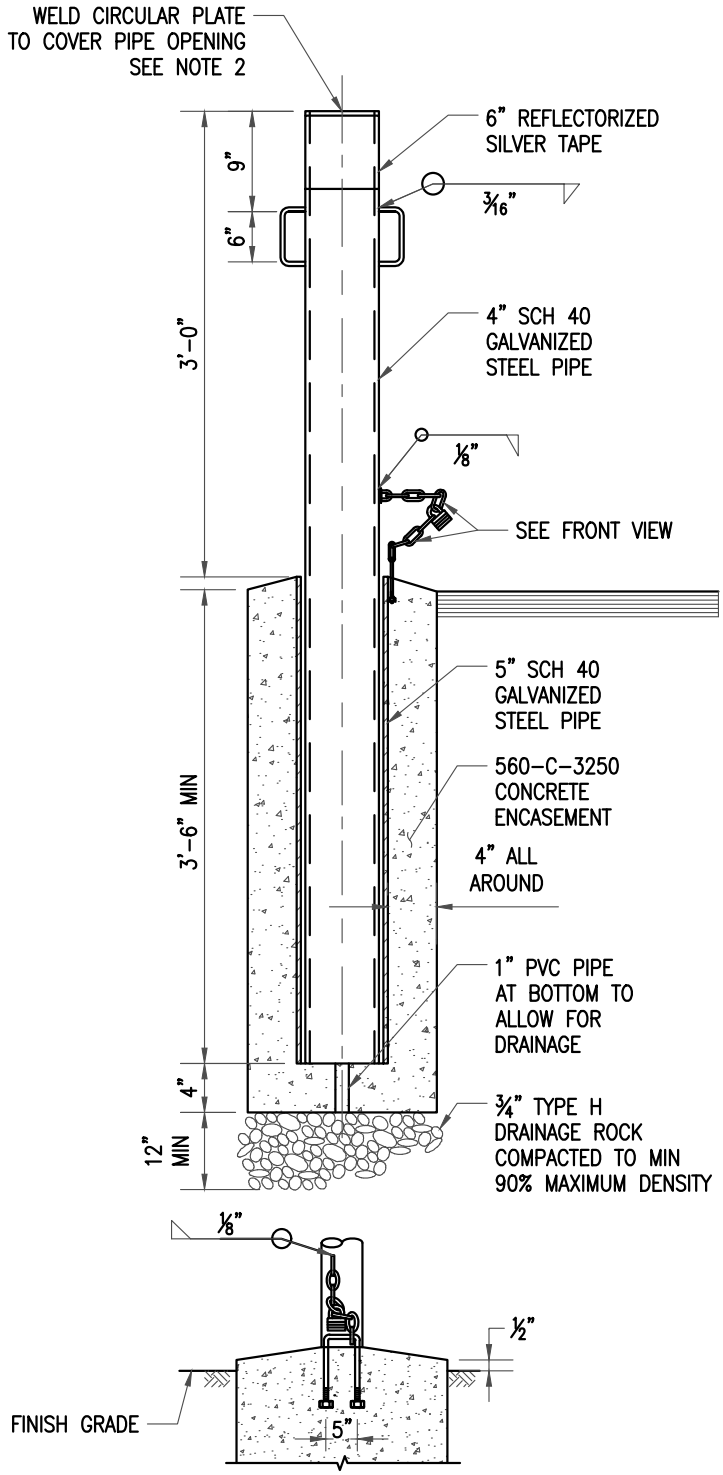

FRONT VIEW

TYPE B:

REMOVABLE

NOTES:

1. PROVIDE TYPE "A" PERMANENT GUARD POST UNLESS OTHERWISE INDICATED.
2. WELD PLATE TO COVER TOP OF PIPE OPENING BEFORE GALVANIZING.

SCALE: NOT TO SCALE

Inland Empire Utilities Agency
A MUNICIPAL WATER DISTRICT

APPROVED BY:

JASON MARSEILLES, P.E. — JULY 2025
MANAGER OF ENGINEERING — DATE

DESIGN BY: GHD, INC.

APPROVED BY:

CHRIS BARTLEMAN, P.E. — JULY 2025
C81075 — DATE

Inland Empire Utilities Agency

GUARD POST DETAIL

REVISION			
NO.	BY	DATE	APPROVED

C-SW-001

SHEET 1 OF 1

\\ghdnet\ghd\US\Irvine\Projects\111\11181240 IEUA On Call Engineering Serv\Phase 08 - IEUA Standard Details\4- Delivery Documents\1- CAD\Sheets\Civil Standard Details\C-SW-001.dwg May 30, 2025 - 2:34pm

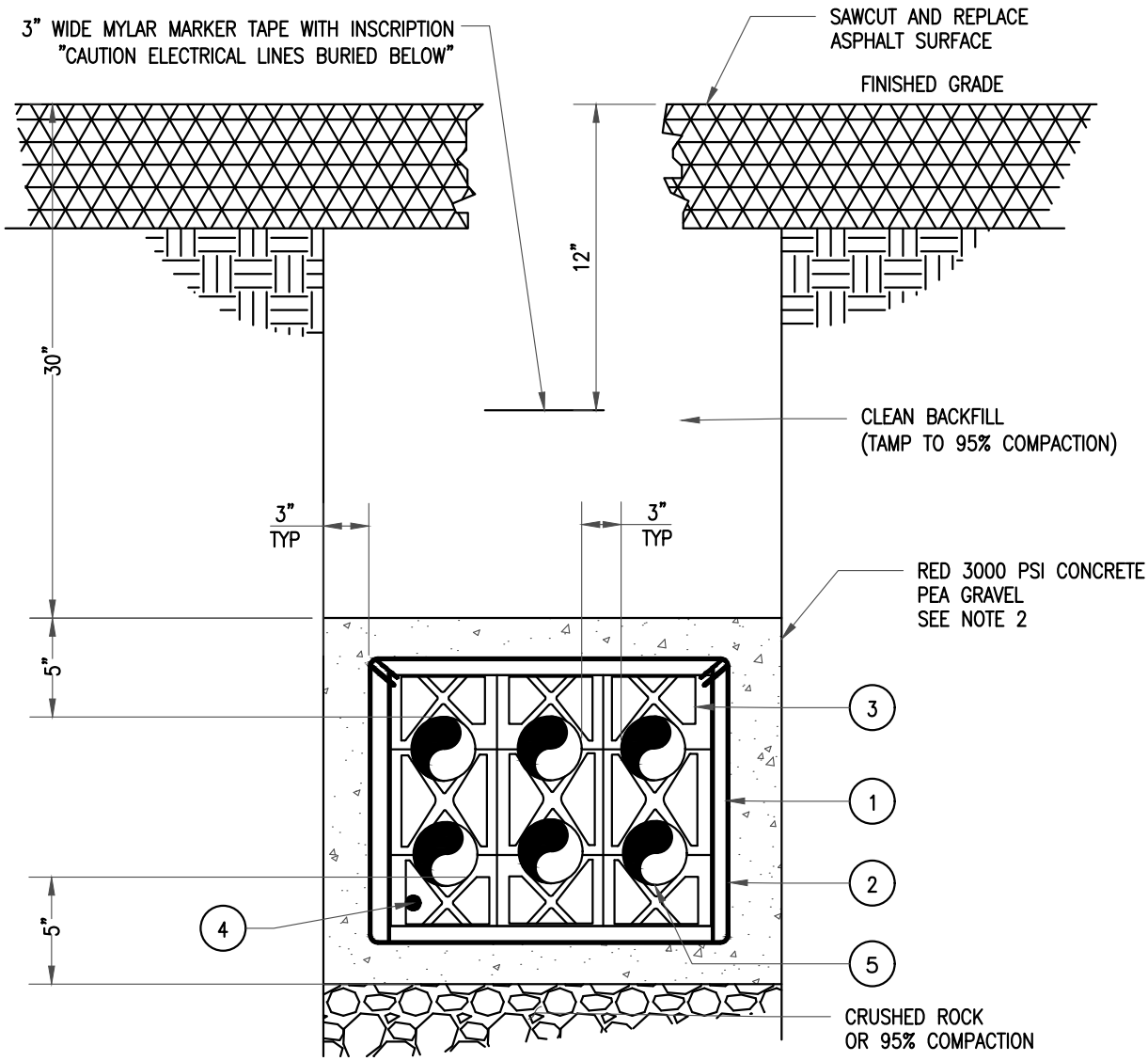

NOTES:

1. DIMENSIONS SHOWN ARE MINIMUM.
2. RED CONCRETE COLOR ADDITIVE SHALL BE: BRICK RED "COLORFUL" BY OWL MFG., ARCADIA, CA OR CORAL RED "CHROMIX C-22" BY L.M. SCOFIELD CO, LOS ANGELES, CA OR APPROVED EQUAL.

KEY NOTES:

1. CONSULTANT SHALL CONFIRM THAT REINFORCEMENT REQUIREMENTS SATISFY PROJECT CONDITIONS. PROVIDE MINIMUM #4 REINFORCING STEEL 12" MAXIMUM ON CENTER AROUND ENTIRE PERIMETER OF DUCT BANK (MIN. 12" OVERLAP).
2. #4 REINFORCING STEEL HOOPS 36" MAXIMUM ON CENTER ALONG LENGTH OF DUCT BANK (MIN. 12" OVERLAP).
3. PVC CONDUIT SPACERS ON 5' CENTERS (MAXIMUM) LOCATE 12" FROM HOOPS.
4. GROUND CONDUCTOR SHALL RUN CONTINUOUSLY THROUGH MANHOLES AND SHALL CONTINUE FROM DUCT BANK INTO SWITCHGEAR OR BUILDING GROUNDING SYSTEM AND SHALL BE BONDED TO EACH RIGID METAL CONDUIT. SIZE TO BE #2/0 MINIMUM.
5. REFER TO DUCT BANK AND CONDUIT SCHEDULES FOR CONDUIT REQUIREMENTS.

SCALE: NOT TO SCALE

Inland Empire Utilities Agency
A MUNICIPAL WATER DISTRICT

APPROVED BY:
JASON MARSEILLES, P.E. — JULY 2025
MANAGER OF ENGINEERING — DATE

DESIGN BY: GHD, INC.
APPROVED BY:
CHRIS BARTLEMAN, P.E. — JULY 2025
C81075 — DATE

Inland Empire Utilities Agency

ELECTRICAL DUCT BANK
CONCRETE ENCASED AND REINFORCED

REVISION			
NO.	BY	DATE	APPROVED

E-DB-001

SHEET 1 OF 1

\\ghdnet\ghd\US\Irvine\Projects\111\11181240 IEUA On Call Engineering Serv\Phase 08 - IEUA Standard Details\4- Delivery Documents\1- CAD\Sheets\Electrical Standard Details\E-DB-001-002.dwg May 30, 2025 - 2:35pm

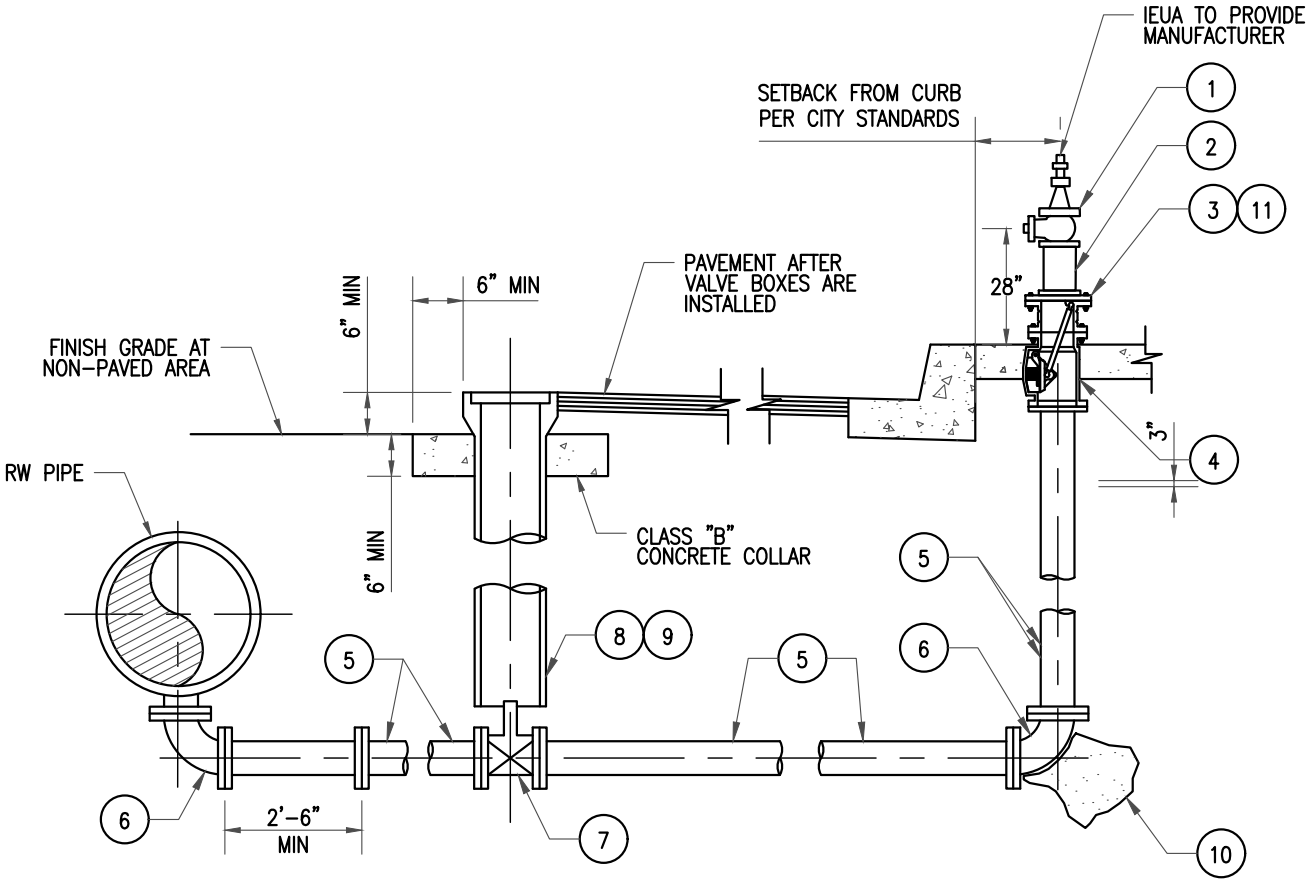

NOTES:

1. HYDRANT TO BE LOCATED DIRECTLY BEHIND CURB CLOSEST TO THE REGIONAL MANHOLE.
2. PROVIDE VALVE STEM EXTENSION IF DEPTH TO VALVE NUT EXCEEDS 4 FEET.
3. PIPING AND FITTINGS SHALL BE FLANGED.
4. HYDRANT SHALL BE MARKED "IEUA RW" OR PAINTED PURPLE LABEL "IEUA".
5. BACKFILL CLASS SHALL BE EQUAL TO THE ADJACENT RECYCLED WATER PIPELINE UNLESS OTHERWISE SHOWN.
6. ALL BURIED BOLTS SHALL BE 316 STAINLESS STEEL. COAT WITH WAX TAPE. THE WAX TAPE COATING SHALL CONSIST OF THREE PARTS: SURFACE PRIMER, WAX TAPE AND OUTER COVERING. THE PRIMER SHALL BE A BLEND OF PETROLEUM, PLASTICIZER AND CORROSION INHIBITORS THAT IS EASILY FORMABLE OVER IRREGULAR SURFACES SUCH AS TRENTON #1 WAX-TAPE OR APPROVED EQUAL. THE OUTER COVERING SHALL BE A PLASTIC WRAPPER CONSISTING OF THREE (3), EACH 50 GAUGE, CLEAR PVC, HIGH CLING MEMBRANES WOUND TOGETHER AS A SINGLE SHEET SUCH AS TRENTON POLY-PLY OR APPROVED EQUAL.

SCALE: NOT TO SCALE

Inland Empire Utilities Agency
A MUNICIPAL WATER DISTRICT

APPROVED BY:
JASON MARSEILLES, P.E. — JULY 2025
MANAGER OF ENGINEERING — DATE

DESIGN BY: GHD, INC.
APPROVED BY:
CHRIS BARTLEMAN, P.E. — JULY 2025
C81075 — DATE

Inland Empire Utilities Agency

6" BLOW-OFF ASSEMBLY

REVISION			
NO.	BY	DATE	APPROVED

RW-BO-002

SHEET 1 OF 2

\\ghdnet\ghd\US\Irvine\Projects\111\11181240 IEUA On Call Engineering Serv\Phase 08 - IEUA Standard Details\4- Delivery Documents\1- CAD\Sheets\Civil Standard Details\RW-BO-002.dwg May 30, 2025 - 2:35pm

CONSTRUCTION ITEMS / MATERIALS LIST

ITEM NO.	SIZE AND DESCRIPTION
1	4" X 2 1/2" BRONZE WHARF HEAD HYDRANT. (JONES MODEL NO.J-344 H.P. OR APPROVED EQUAL)
2	4" NIPPLE
3	6" X 4" COMPANION FLANGE.
4	BREAK OFF CHECK VALVE (LONG BEACH IRON WORKS LB400 OR APPROVED EQUAL)
5	6" STEEL SCH. 40 PIPE, CML & CMC
6	6" STEEL 90° ELBOW, CML & CMC (LONG RADIUS)
7	6" GATE VALVE FLANGED
8	VALVE BOX ASSEMBLY PER DRAWING RW-VB-001
9	VALVE STEM EXTENSION IF REQUIRED PER DRAWING RW-VE-001
10	CONCRETE THRUST BLOCK PER DRAWING C-RS-001
11	BREAK AWAY BOLTS

SCALE: NOT TO SCALE

Inland Empire Utilities Agency
A MUNICIPAL WATER DISTRICT

APPROVED BY:
JASON MARSEILLES, P.E. — JULY 2025
MANAGER OF ENGINEERING — DATE

DESIGN BY: GHD, INC.
APPROVED BY:
CHRIS BARTLEMAN, P.E. — JULY 2025
C81075 — DATE

Inland Empire Utilities Agency

6" BLOW-OFF ASSEMBLY

REVISION			
NO.	BY	DATE	APPROVED

RW-BO-002

SHEET 2 OF 2

\\ghdnet\ghd\US\Irvine\Projects\111\11181240 IEUA On Call Engineering Serv\Phase 08 - IEUA Standard Details\4- Delivery Documents\1- CAD\Sheets\Civil Standard Details\RW-BO-002.dwg May 30, 2025 - 2:35pm

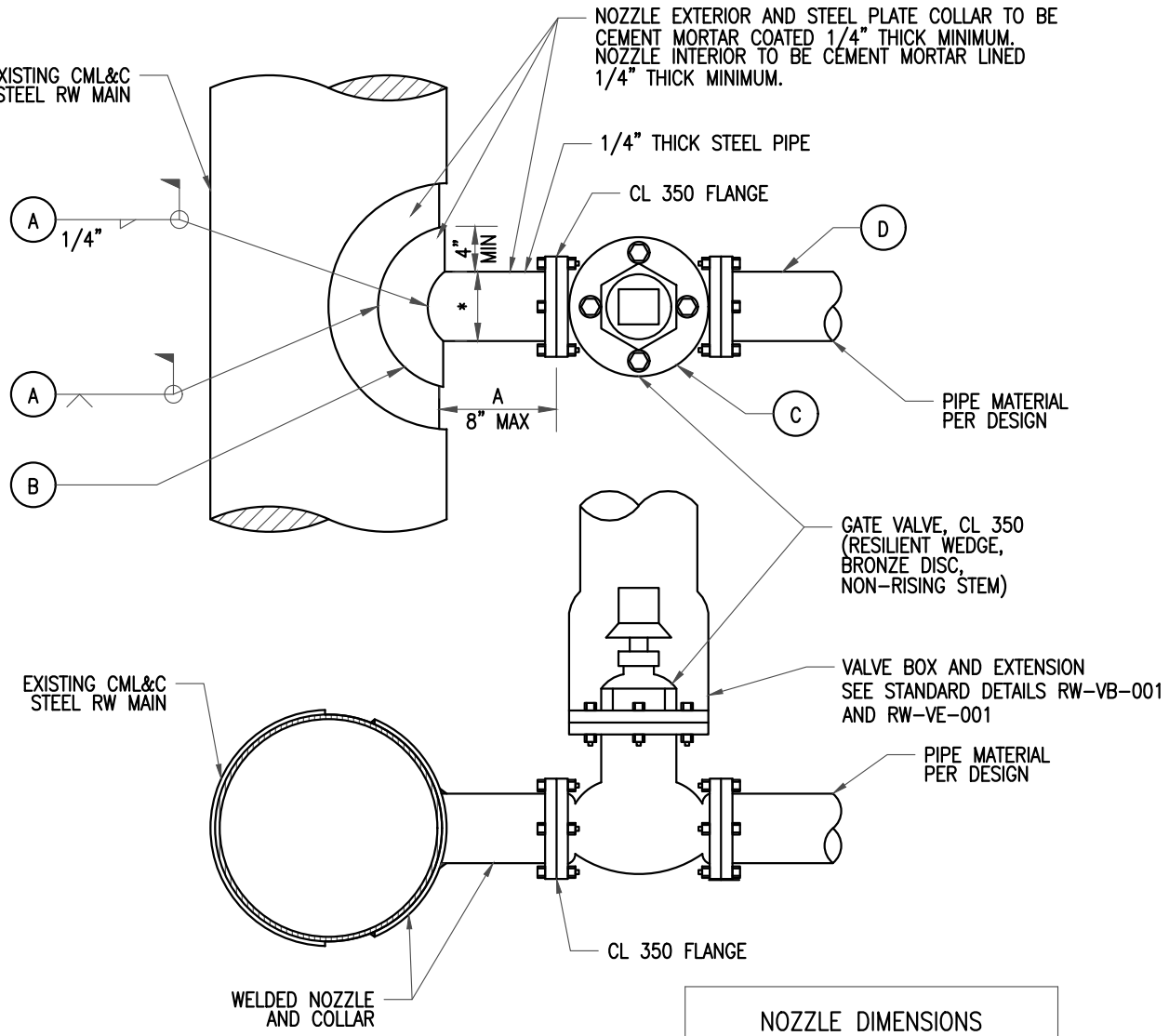

NOZZLE DIMENSIONS	
* TAP SIZE	DIMENSION "A"
4 IN	5 3/4 IN
6 IN	6 IN
8 IN	6 3/4 IN
10 IN	7 IN
12 IN	7 1/2 IN

CONSTRUCTION NOTES:

- (A) FILLET WELD NOZZLE AND COLLAR TO PIPE WALL
- (B) AIR TEST NOZZLE AND COLLAR
- (C) INSTALL VALVE
- (D) INSTALL PIPE

CML&C STEEL PIPE CONNECTION

SCALE: NOT TO SCALE

REGISTERED PROFESSIONAL ENGINEER
JERRY BURKE
No. C52114
CIVIL
STATE OF CALIFORNIA

APPROVED BY:

MANAGER OF ENGINEERING DATE

Inland Empire Utilities Agency

LATERAL CONNECTION OF 4" AND LARGER

REVISION				
NO.	BY	DATE	APPROVED	

RW-LC-001

SHEET 1 OF 2

KEYWORDS:

RECYCLED WATER SERVICE, LATERAL CONNECTION

\\ghdnet\ghd\US\Irvine\Projects\111\11181240 IEUA On Call Engineering Serv\Phase 08 - IEUA Standard Details\4- Delivery Documents\1- CAD\Sheets\Civil Standard Details\RW-LC-001.dwg May 30, 2025 - 2:35pm

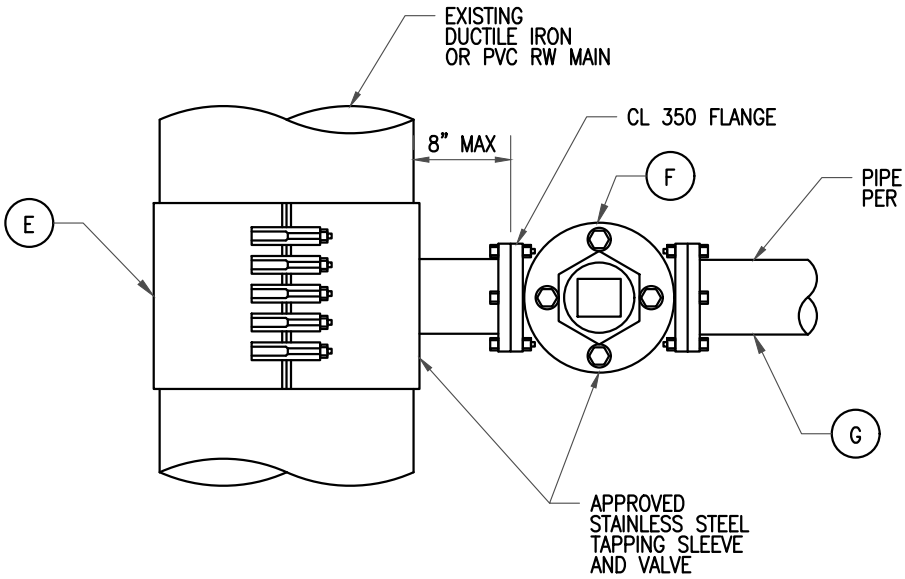

CONSTRUCTION NOTES:

- (E) INSTALL TAPPING SLEEVE
- (F) INSTALL TAPPING VALVE
- (G) INSTALL PIPE

DUCTILE IRON OR PVC PIPE CONNECTION

GENERAL NOTES:

1. "HOT-TAPS" LESS THAN 1/2 THE SIZE OF THE TRANSMISSION MAIN REQUIRE A STAINLESS STEEL TAPPING SLEEVE AND VALVE ON A DIP/PVC PIPE OR A WELDED STEEL OUTLET AND COLLAR ON STEEL PIPE. THE STEEL COLLAR PLATE AND OUTLET PIPE THICKNESS SHALL BE 1/4" MINIMUM OR AS DETERMINED BY IEUA.
2. FILLET WELDS SHALL BE PER AWWA C-206, "FIELD WELDING OF STEEL WATER PIPE."
3. CONNECTIONS LARGER THAN 1/2 SIZE OF THE MAIN LINES REQUIRE THE INSTALLATION OF A TEE AND VALVE ASSEMBLY OF THE SAME MATERIAL AS THE MAIN. THE CONNECTION SIZE MAY BE EXCEPTIONALLY INCREASED TO MAXIMUM 3/4 SIZE OF THE MAIN LINE, BY SPECIAL APPROVAL OF IEUA.
4. CONNECTIONS SMALLER THAN 4" REQUIRE THE REVIEW AND APPROVAL BY IEUA.

SCALE: NOT TO SCALE

Inland Empire Utilities Agency
A MUNICIPAL WATER DISTRICT

APPROVED BY:
JASON MARSEILLES, P.E. — JULY 2025
MANAGER OF ENGINEERING — DATE

DESIGN BY: GHD, INC.
APPROVED BY:
CHRIS BARTLEMAN, P.E. — JULY 2025
C81075 — DATE

Inland Empire Utilities Agency

LATERAL CONNECTION OF 4" AND LARGER

REVISION			
NO.	BY	DATE	APPROVED

RW-LC-001

SHEET 2 OF 2

\\ghdnet\ghd\US\Irvine\Projects\111\11181240 IEUA On Call Engineering Serv\Phase 08 - IEUA Standard Details\4- Delivery Documents\1- CAD\Sheets\Civil Standard Details\RW-LC-001.dwg May 30, 2025 - 2:35pm

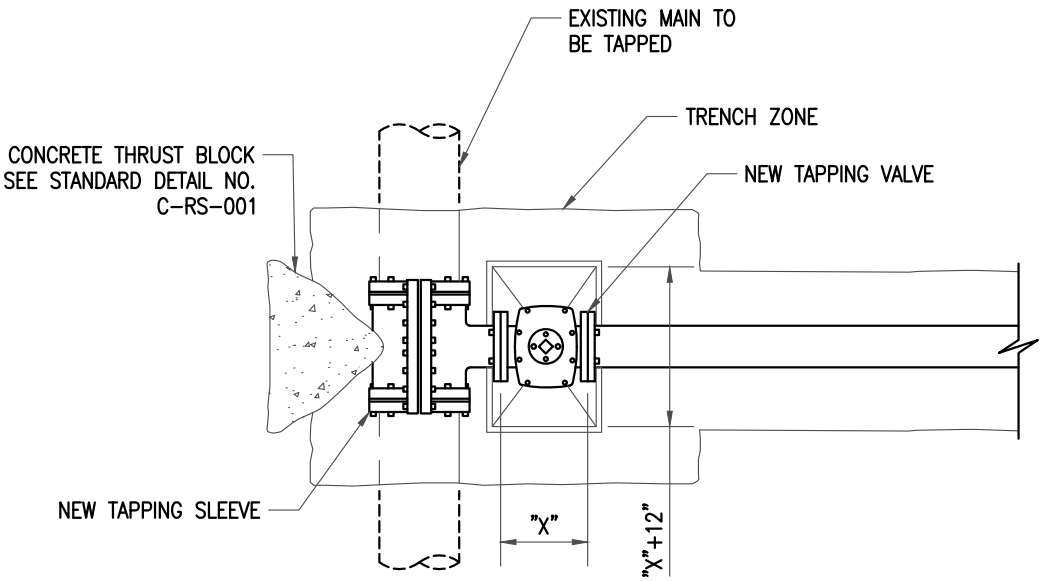

PLAN

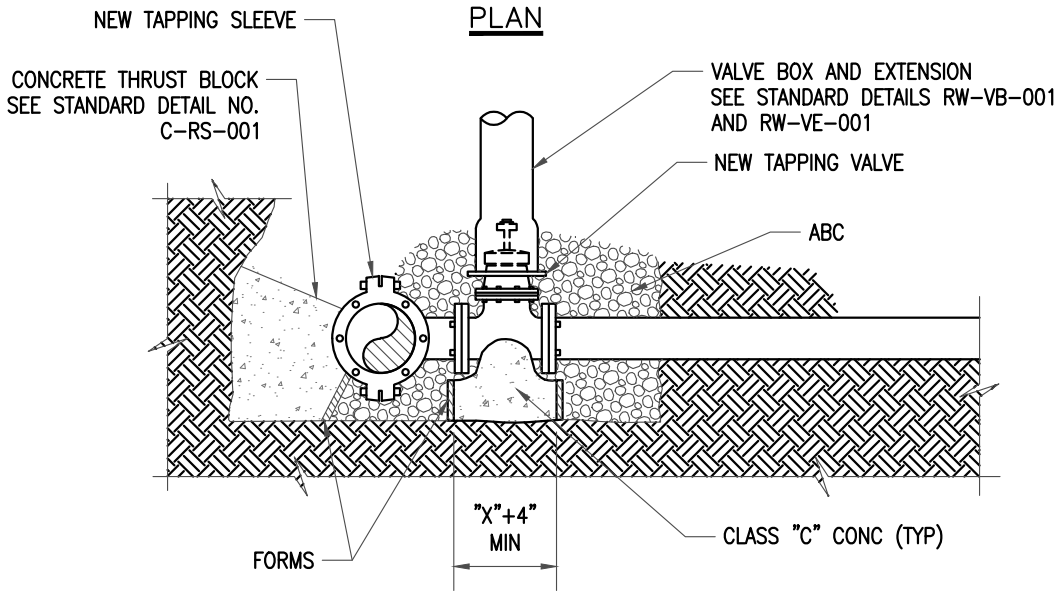

ELEVATION

NOTES:

1. INSTALL PERMANENT THRUST BLOCKING UNDER VALVE BEFORE TAP IS MADE. JOINTS AND BOLTS SHALL BE CLEAR OF CONCRETE.
2. TAPPING SLEEVE TO BE PLACED 18" MIN FROM ANY BELL, COUPLING, VALVE, OR FITTING.

SCALE: NOT TO SCALE

Inland Empire Utilities Agency
A MUNICIPAL WATER DISTRICT

APPROVED BY:
JASON MARSEILLES, P.E. — JULY 2025
MANAGER OF ENGINEERING — DATE

DESIGN BY: GHD, INC.
APPROVED BY:
CHRIS BARTLEMAN, P.E. — JULY 2025
C81075 — DATE

Inland Empire Utilities Agency

TAPPING SLEEVE

REVISION			
NO.	BY	DATE	APPROVED

RW-TS-001

SHEET 1 OF 1

\\ghdnet\ghd\US\Irvine\Projects\111\11181240 IEUA On Call Engineering Serv\Phase 08 - IEUA Standard Details\4- Delivery Documents\1- CAD\Sheets\Civil Standard Details\RW-TS-001.dwg May 30, 2025 - 2:36pm

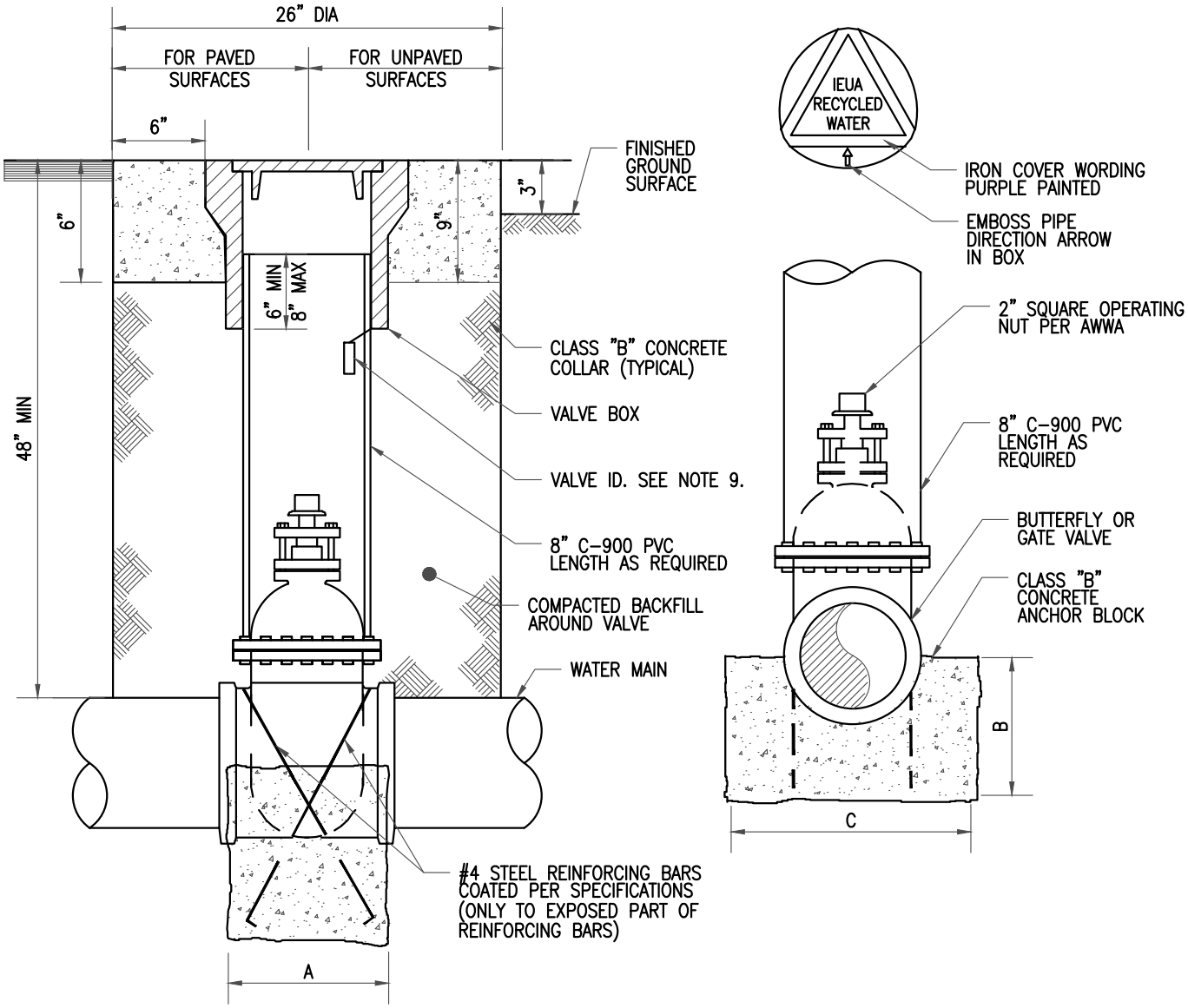

VALVE BOX DETAIL

SCALE: NOT TO SCALE

Inland Empire Utilities Agency
A MUNICIPAL WATER DISTRICT

APPROVED BY:

JASON MARSEILLES, P.E. — JULY 2025
MANAGER OF ENGINEERING — DATE

DESIGN BY: GHD, INC.

APPROVED BY:
CHRIS BARTLEMAN, P.E. — JULY 2025
C81075 — DATE

Inland Empire Utilities Agency

VALVE BOX DETAIL

REVISION			
NO.	BY	DATE	APPROVED

RW-VB-001

SHEET 1 OF 2

\\ghdnet\ghd\US\Irvine\Projects\111\11181240 IEUA On Call Engineering Serv\Phase 08 - IEUA Standard Details\4- Delivery Documents\1- CAD\Sheets\Civil Standard Details\RW-VB-001.dwg May 30, 2025 - 2:36pm

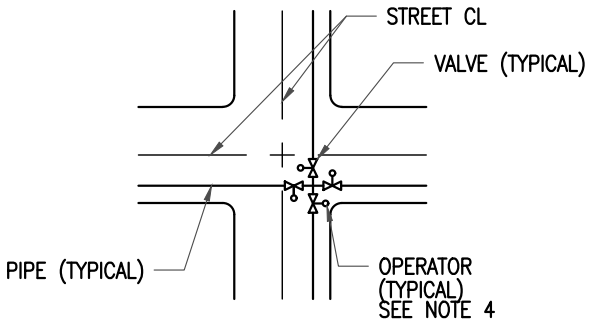

TYPICAL BUTTERFLY VALVE
OPERATOR POSITION

VALVE SIZE	DIMENSION A	DIMENSION B
6" OR SMALLER	12"	12"
8"	13"	14"
10"	14"	16"
12"	14"	18"
18"	22"	24"
30"	34"	36"

DIMENSION "C"= TRENCH WIDTH PLUS 2X PIPE DIAMETER

NOTES:

1. PROVIDE VALVE STEM EXTENSION IF DEPTH TO VALVE NUT EXCEEDS 4 FEET.
2. BUTTERFLY VALVE OPERATORS SHALL BE LOCATED ON THE LEFT-HAND SIDE OF THE VALVE (AT THE TEE OR CROSS), LOOKING THROUGH THE VALVE TOWARD THE PIPE END.
3. VALVES TO BE LOCATED ADJACENT TO FITTINGS WHEREVER POSSIBLE.
4. VALVES BOLTED TO FITTINGS WILL NOT REQUIRE ANCHOR BLOCKS.
5. PROVIDE HEAVY DUTY CAST-IRON VALVE CAP, MARKED AS INDICATED, PAINTED PURPLE. VALVE LID SHALL BE TRIANGULAR SHAPED, TRAFFIC RATED VALVE BOX COVER SHALL HAVE A CIRCULAR ADAPTER CHRISTY CONCRETE PRODUCTS G4 BOX/G4C OR APPROVED EQUAL.
6. STAMP INTERIOR OF VALVE LID SKIRT WITH VALVE SIZE AND TYPE (G.V. FOR GATE VALVES, B.F.V. FOR BUTTERFLY VALVES). LETTERING SHALL BE BLACK AND A MINIMUM OF 3" IN HEIGHT.
7. STAMP CONCRETE COLLAR WITH DIRECTION ARROW, VALVE TYPE (SEE NOTE 6), RW, VALVE SIZE AND DEPTH.
8. PROVIDE VALVE STEM EXTENSIONS TO 18" BELOW GRADE AND BONNET DUST COVERS.
9. VALVE NUMBER PER STANDARD RW-VI-001. VALVE NUMBER SHALL BE PLACED ON THE PVC STEM.

SCALE: NOT TO SCALE

Inland Empire Utilities Agency
A MUNICIPAL WATER DISTRICT

APPROVED BY:
JASON MARSEILLES, P.E. — JULY 2025
MANAGER OF ENGINEERING — DATE

DESIGN BY: GHD, INC.
APPROVED BY:
CHRIS BARTLEMAN, P.E. — JULY 2025
C81075 — DATE

Inland Empire Utilities Agency

VALVE BOX DETAIL

REVISION NO.	BY	DATE	APPROVED

RW-VB-001

SHEET 2 OF 2

\\ghdnet\ghd\US\Irvine\Projects\111\11181240 IEUA On Call Engineering Serv\Phase 08 - IEUA Standard Details\4- Delivery Documents\1- CAD\Sheets\Civil Standard Details\RW-VB-001.dwg May 30, 2025 - 2:36pm

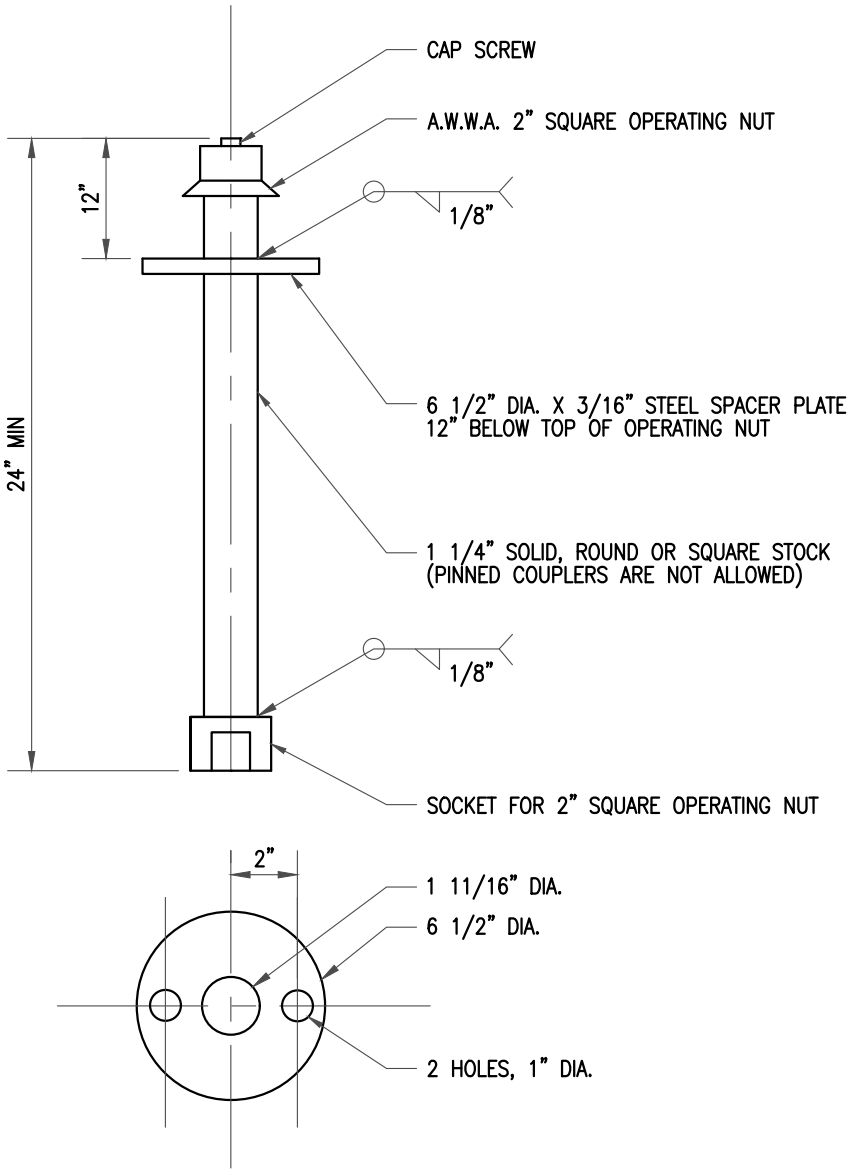

SPACER PLATE

PLAN

NOTES:

1. PROVIDE VALVE STEM EXTENSION WHEN DEPTH TO OPERATING NUT EXCEEDS 48" (FABRICATE EXTENSION TO FIELD MEASUREMENT – SEE NOTE 2.
2. NO VALVE STEM EXTENSION SHALL BE LESS THAN 2 FEET IN LENGTH. TERMINATE EXTENSION 24" FROM FINISHED GRADE.
3. PROVIDE ADDITIONAL SPACER PLATE WHEN DISTANCE TO BOTTOM SOCKET EXCEEDS 5 FEET.

SCALE: NOT TO SCALE

Inland Empire Utilities Agency
A MUNICIPAL WATER DISTRICT

APPROVED BY:
JASON MARSEILLES, P.E. — JULY 2025
MANAGER OF ENGINEERING — DATE

DESIGN BY: GHD, INC.
APPROVED BY:
CHRIS BARTLEMAN, P.E. — JULY 2025
C81075 — DATE

Inland Empire Utilities Agency

VALVE
STEM EXTENSION

REVISION			
NO.	BY	DATE	APPROVED

RW-VE-001

SHEET 1 OF 1

\\ghdnet\ghd\US\Irvine\Projects\111\11181240 IEUA On Call Engineering Serv\Phase 08 - IEUA Standard Details\4- Delivery Documents\1- CAD\Sheets\Civil Standard Details\RW-VE-001.dwg May 30, 2025 - 2:37pm

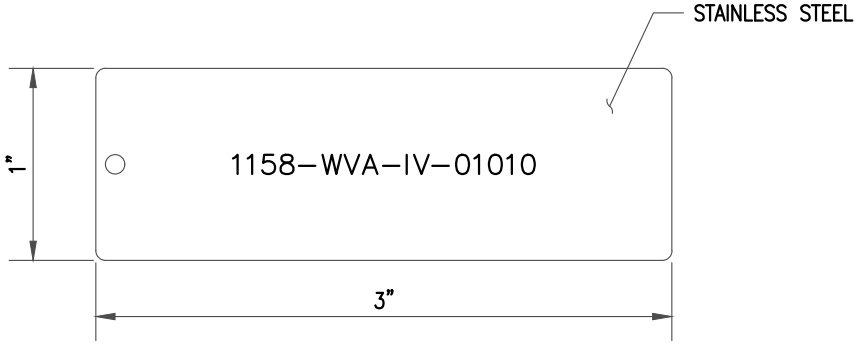

PLAN

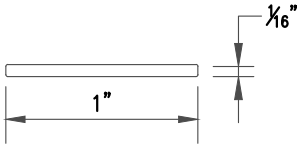

ELEVATION

NAMING CONVENTION EXAMPLE

1158–WVA–AR–00000
1158–WVA–BO–00000
1158–WVA–CP–00000
1158–WVA–MW–00000
1158–WVA–IV–00000
1158–WVA–MV–00000
1158–WVA–LV–00000
1158–WVA–PV–00000

(1) (2) (3) (4)

1158–WVA–IV–00000
A B C

NOTES:

(1) 1158 IDENTIFIES PRESSURE ZONE

(2) WVA WINEVILLE PIPELINE SEGMENT A OR B

(3) ASSET/APPURTENANCE IDENTIFICATION

(4) (A) IDENTIFIES WHAT PAGE THE ASSET CAN BE FOUND IN
(B) WHAT NUMBER THE ASSET IS IN SEQUENTIAL ORDER
(C) USED FOR FUTURE IF NEEDED

SCALE: NOT TO SCALE

Inland Empire Utilities Agency
A MUNICIPAL WATER DISTRICT

APPROVED BY:
JASON MARSEILLES, P.E. — JULY 2025
MANAGER OF ENGINEERING — DATE

DESIGN BY: GHD, INC.
APPROVED BY:
CHRIS BARTLEMAN, P.E. — JULY 2025
C81075 — DATE

Inland Empire Utilities Agency

STAINLESS STEEL
VALVE ID TAGS

REVISION			
NO.	BY	DATE	APPROVED

RW–VI–001

SHEET 1 OF 1

\\ghdnet\ghd\US\Irvine\Projects\111\11181240 IEUA On Call Engineering Serv\Phase 08 – IEUA Standard Details\4– Delivery Documents\1– CAD\Sheets\Civil Standard Details\RW–VI–001.dwg May 30, 2025 – 2:37pm

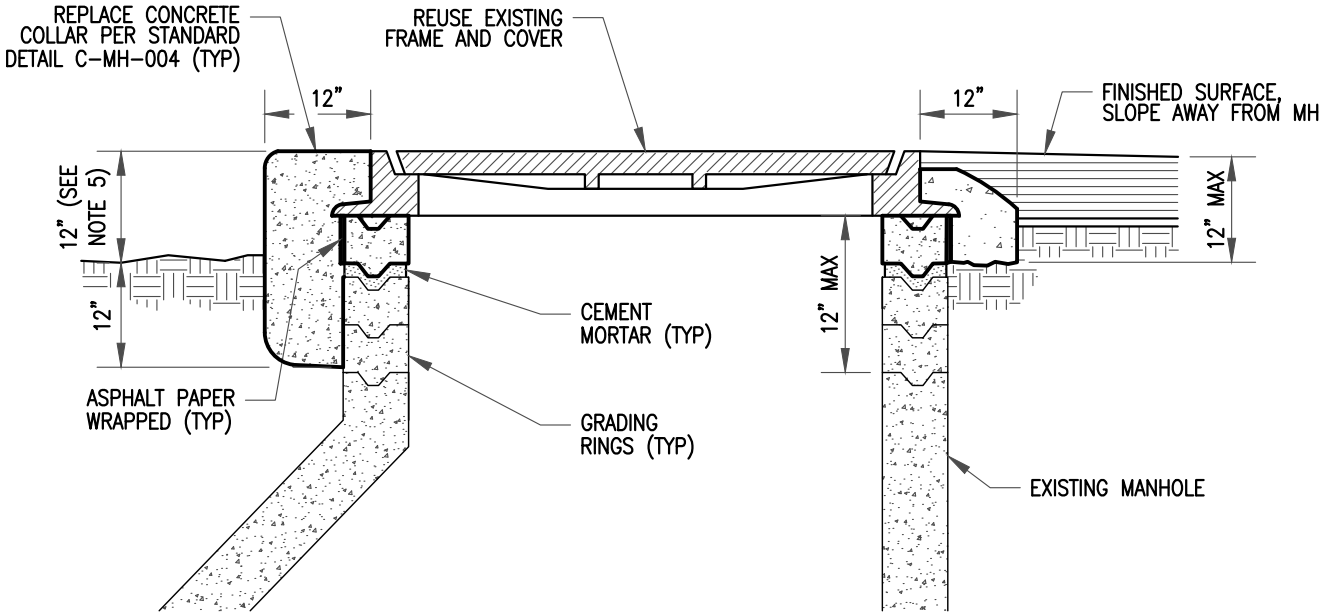

NOTES:

1. SALVAGE EXISTING FRAME AND COVER FOR REUSE IF COMPOSITE. IF NOT COMPOSITE, REPLACE PER STANDARD DETAIL C-MH-004.

2. PROVIDE ADDITIONAL GRADE RINGS AS REQUIRED, NOT EXCEEDING 12" HIGH PER STANDARD DETAIL C-MH-001. WHERE GRADE ADJUSTMENT EXCEEDS THE 12" MAX GRADE RING HEIGHT, THE EXISTING GRADE RINGS AND CONE SHALL BE REPLACED WITH NEW BARRELS, CONE, AND GRADE RINGS AS REQUIRED TO ACHIEVE THE NEW GRADE, OR AS DIRECTED BY IEUA.

3. WHEN ADDITIONAL GRADE RINGS ARE USED, CHIP OUT LEVELING MORTAR ON EXISTING GRADE RING WHERE PRESENT AND RESET WITH FLEXIBLE JOINT SEALANT. CEMENT MORTAR GROUT NEW UPPER GRADE RING AS REQUIRED TO LEVEL FRAME AND COVER WITH FINISH SURFACE GRADE PER STANDARD DETAIL C-MH-004.

4. 3000 P.S.I. CAST-IN-PLACE CONCRETE MAY BE USED IN LIEU OF THE UPPER GRADE RING WHEN AN ADDITIONAL GRADE RING WILL NOT FIT. THE MINIMUM CAST-IN-PLACE GRADE RING HEIGHT SHALL BE 1 INCH. WHEN A CAST-IN-PLACE GRADE RING IS USED IT SHALL BE POURED MONOLITHICALLY WITH THE CONCRETE COLLAR.

5. IF WITHIN A PLANTER, 12" DIMENSION CAN BE REDUCED TO 6".

SCALE: NOT TO SCALE

Inland Empire Utilities Agency
A MUNICIPAL WATER DISTRICT

APPROVED BY:
JASON MARSEILLES, P.E. — JULY 2025
MANAGER OF ENGINEERING — DATE

DESIGN BY: GHD, INC.
APPROVED BY:
CHRIS BARTLEMAN, P.E. — JULY 2025
C81075 — DATE

Inland Empire Utilities Agency

MANHOLE ADJUSTMENT TO GRADE

REVISION			
NO.	BY	DATE	APPROVED

C-MH-005

SHEET 1 OF 1

\\ghdnet\ghd\US\Irvine\Projects\111\11181240 IEUA On Call Engineering Serv\Phase 08 - IEUA Standard Details\4- Delivery Documents\1- CAD\Sheets\Civil Standard Details\C-MH-005.dwg May 30, 2025 - 2:45pm

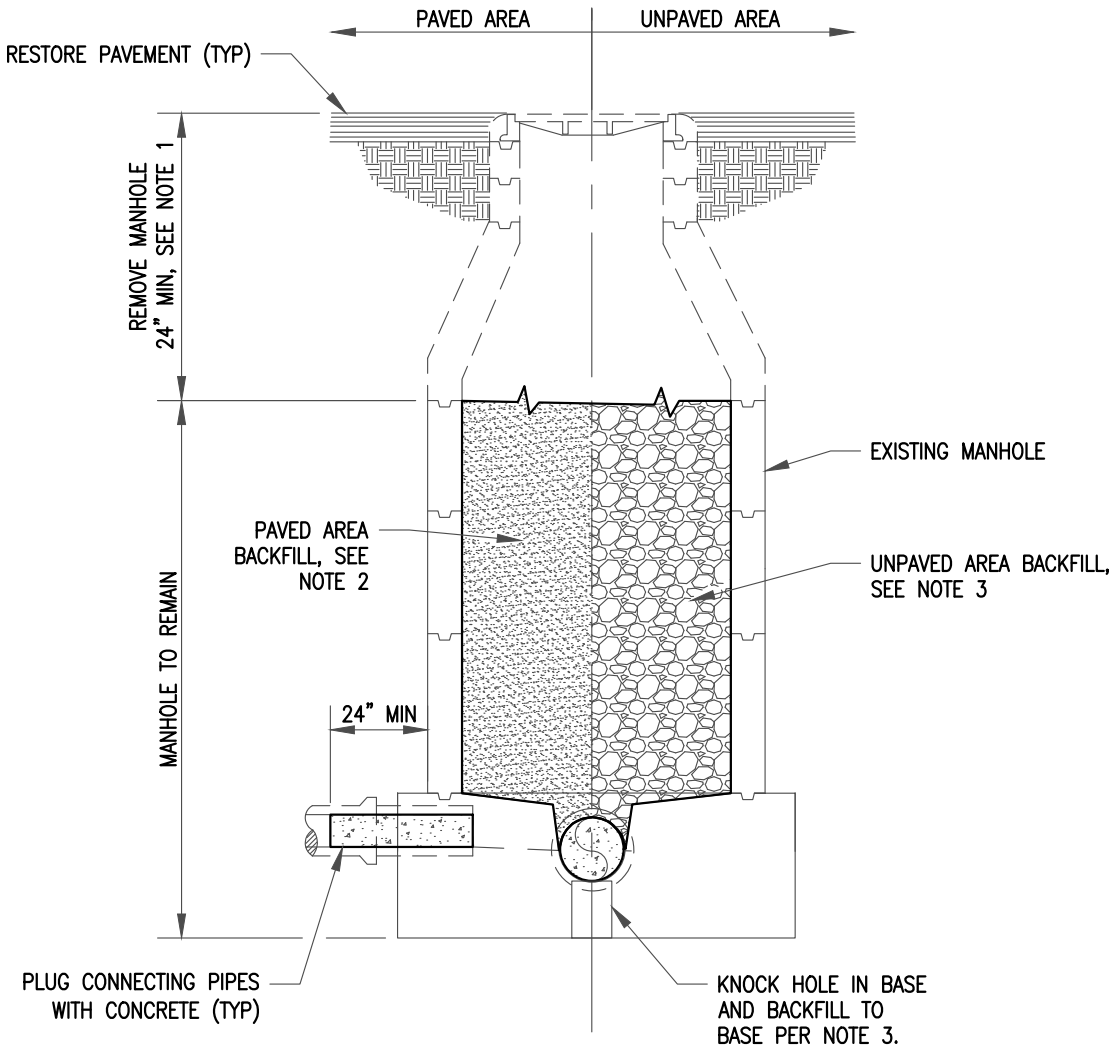

NOTES:

1. REMOVE MANHOLE CONE, GRADE RINGS, AND FRAME AND COVER AS REQUIRED TO MIN 24" BELOW FINISHED GRADE. SALVAGE FRAME, COVER, AND GRADE RINGS AND DELIVERY TO IEUA BACKFILL TO GRADE PER NOTES 2 OR 3.
2. IN PAVED AREAS, BACKFILL WITH 1-SACK SLURRY AND RESTORE EXISTING PAVEMENT.
3. IN UNPAVED AREAS, BACKFILL WITH COARSE AGGREGATE BASE OR RIVER RUN GRAVEL COMPACTED TO 90% RELATIVE COMPACTION. KNOCK 6" MIN HOLE IN BASE.

SCALE: NOT TO SCALE

Inland Empire Utilities Agency
A MUNICIPAL WATER DISTRICT

APPROVED BY:
JASON MARSEILLES, P.E. — JULY 2025
MANAGER OF ENGINEERING — DATE

DESIGN BY: GHD, INC.
APPROVED BY:
CHRIS BARTLEMAN, P.E. — JULY 2025
C81075 — DATE

Inland Empire Utilities Agency

MANHOLE ABANDONMENT

REVISION			
NO.	BY	DATE	APPROVED

C-MH-006

SHEET 1 OF 1

\\ghdnet\ghd\US\Irvine\Projects\111\11181240 IEUA On Call Engineering Serv\Phase 08 - IEUA Standard Details\4- Delivery Documents\1- CAD\Sheets\Civil Standard Details\C-MH-006.dwg May 30, 2025 - 2:38pm

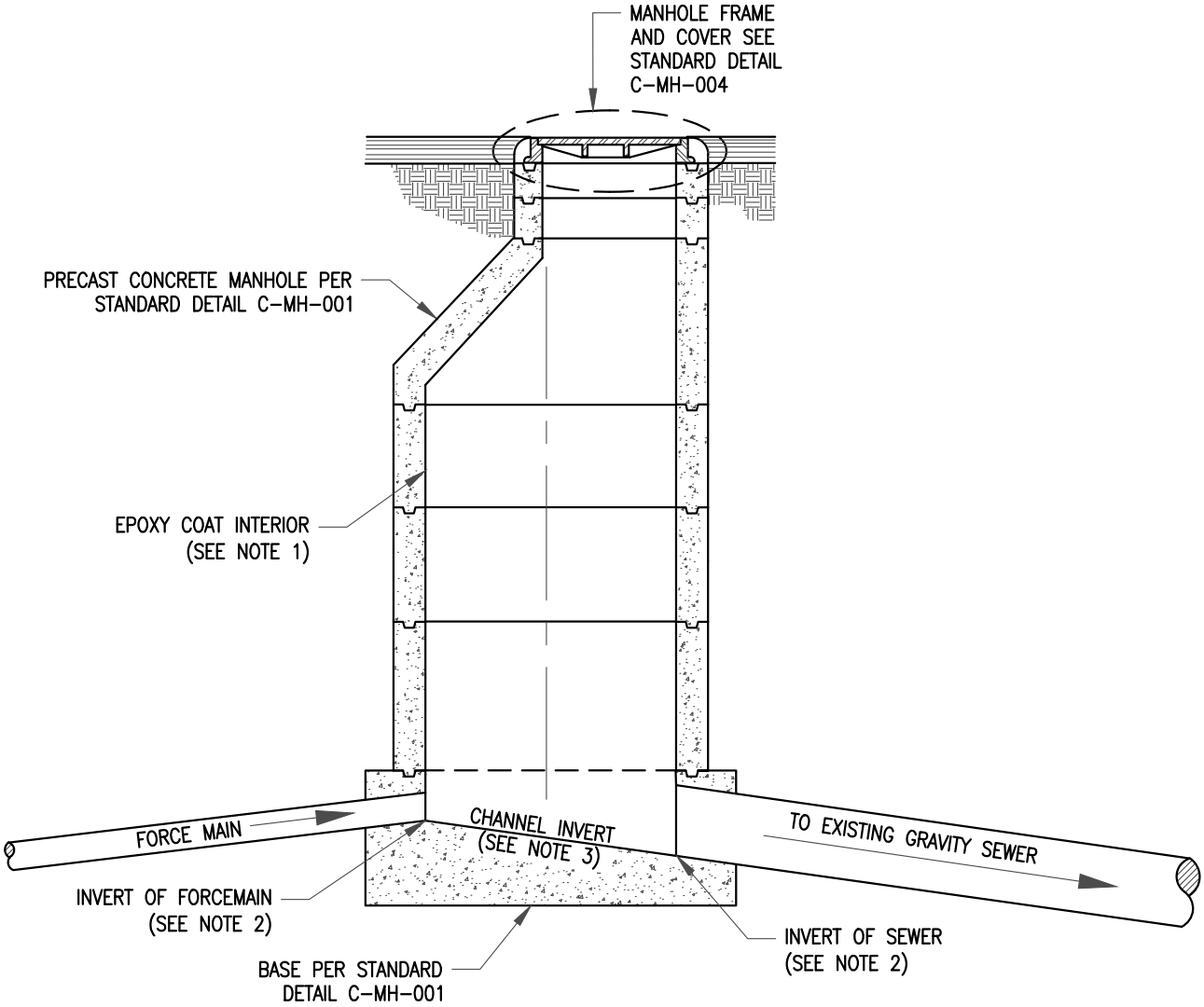

NOTES:

1. COAT INTERIOR OF MANHOLE WITH APPROVED EPOXY COATING AT MINIMUM 80 MILS. IN LIEU OF EPOXY COATED MANHOLE, A H2S RESISTANT MANHOLE OR POLYMER CONCRETE MANHOLE MAY BE INSTALLED.
2. ELEVATION OF GRAVITY SEWER INVERT SHALL BE MINIMUM 1" BELOW ELEVATION OF FORCE MAIN INVERT.
3. PROVIDE SMOOTH DOWNWARD SLOPING CHANNEL FROM FORCE MAIN TO GRAVITY SEWER.
4. FORCE MAIN SHALL NOT CONNECT WITH EXISTING GRAVITY SEWER MANHOLES.
5. INSTALL APPROVED ODOR CONTROL AT DISCHARGE MANHOLE.
6. FORCEMAIN DROP CONNECTIONS ARE NOT PERMITTED.
7. MAXIMUM OF ONE FORCEMAIN CONNECTION PER MANHOLE; MULTIPLE CONNECTIONS NOT ALLOWED.

SCALE: NOT TO SCALE

Inland Empire Utilities Agency
A MUNICIPAL WATER DISTRICT

APPROVED BY:
JASON MARSEILLES, P.E. — JULY 2025
MANAGER OF ENGINEERING — DATE

DESIGN BY: GHD, INC.
APPROVED BY:
CHRIS BARTLEMAN, P.E. — JULY 2025
C81075 — DATE

Inland Empire Utilities Agency

DISCHARGE MANHOLE

REVISION			
NO.	BY	DATE	APPROVED

C-MH-007

SHEET 1 OF 1

\\ghdnet\ghd\US\Irvine\Projects\111\11181240 IEUA On Call Engineering Serv\Phase 08 - IEUA Standard Details\4- Delivery Documents\1- CAD\Sheets\Civil Standard Details\C-MH-007.dwg May 30, 2025 - 2:38pm

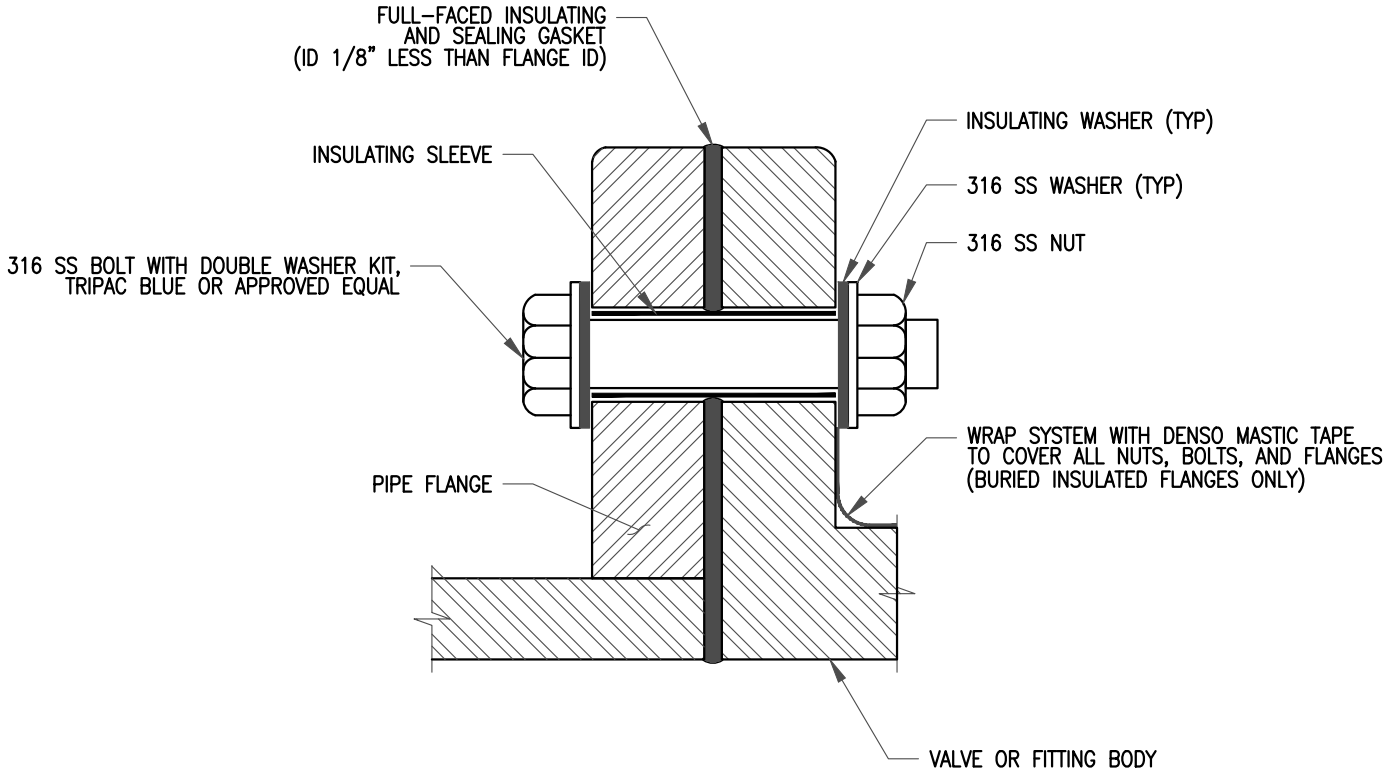

NOTES:

1. INSULATING FLANGE KIT TO BE USED FOR ALL DISSIMILAR METALS UNLESS INDICATED OTHERWISE.
2. FOR TAPPED BOLTS, INSTALL INSULATING SLEEVE WHICH IS CUT TO FIT LENGTH OF BOLT HOLE FOR FLANGE.
3. INSULATED FLANGE KIT MATERIALS, INSTALLATION, AND TESTING PROCEDURES PER MANUFACTURER'S RECOMMENDATIONS.

SCALE: NOT TO SCALE

Inland Empire Utilities Agency
A MUNICIPAL WATER DISTRICT

APPROVED BY:
JASON MARSEILLES, P.E. — JULY 2025
MANAGER OF ENGINEERING — DATE

DESIGN BY: GHD, INC.
APPROVED BY:
CHRIS BARTLEMAN, P.E. — JULY 2025
C81075 — DATE

Inland Empire Utilities Agency

INSULATING FLANGE

REVISION			
NO.	BY	DATE	APPROVED

M-CP-001

SHEET 1 OF 1

\\ghdnet\ghd\US\Irvine\Projects\111\11181240 IEUA On Call Engineering Serv\Phase 08 - IEUA Standard Details\4- Delivery Documents\1- CAD\Sheets\Mechanical Standard Details\M-CP-001.dwg May 30, 2025 - 2:38pm

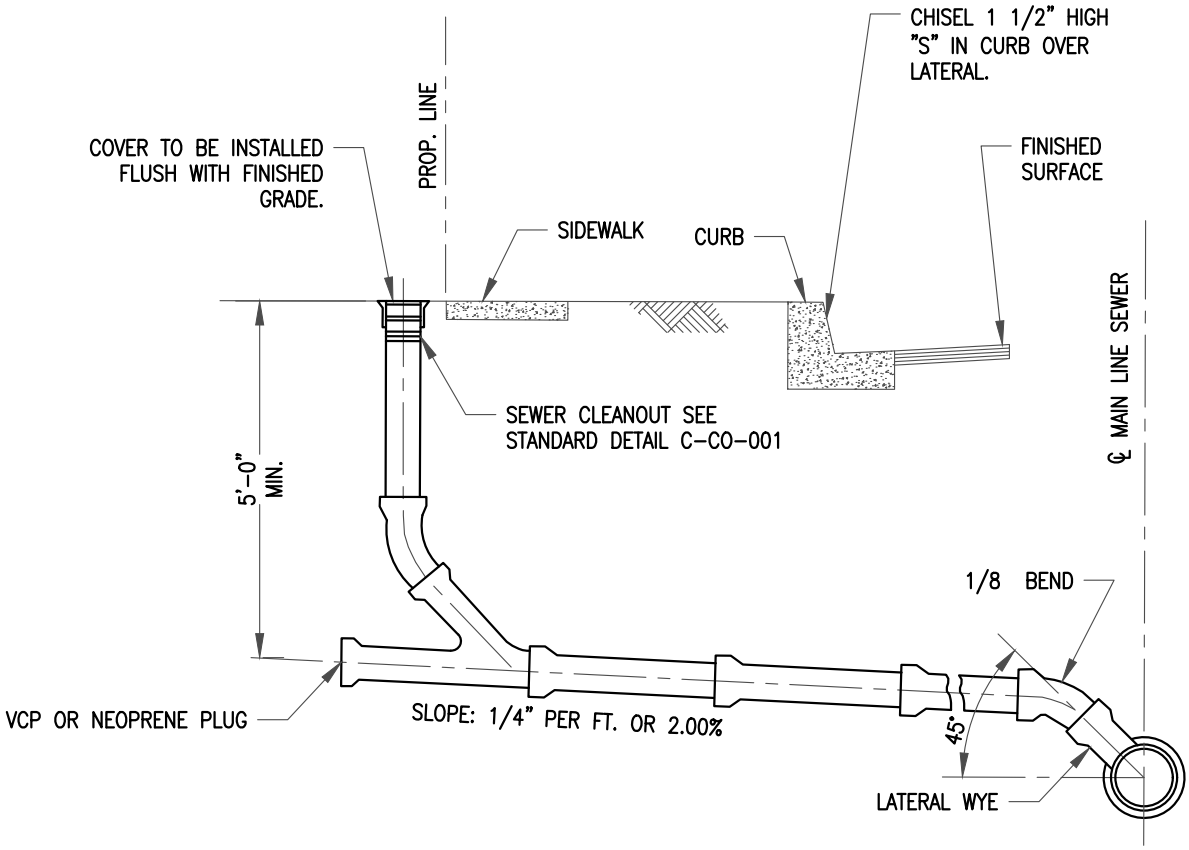

NOTES:

1. FOR SLOPES LESS THAN 1/4" PER FOOT, APPROVAL IS REQUIRED BY ENGINEER.
2. THE LATERAL SHALL BE BEDDED PER STANDARD DRAWING C-EW-006, CLASS B, UNLESS NOTED OTHERWISE.
3. FOR SEWER CLEANOUT RISER, USE PIPE OF THE SAME DIAMETER AND MATERIAL USED IN THE ADJOINING SEWER LINE.
4. SINGLE FAMILY RESIDENCES SHALL HAVE 4" DIAMETER VITRIFIED CLAY PIPE (VCP) SEWER LATERALS. ALL OTHERS SHALL BE 6" OR GREATER.
5. WHERE DIRECTED BY THE ENGINEER, THE CLEANOUT SHALL BE INSTALLED ON THE PUBLIC PROPERTY SIDE OF THE PROPERTY LINE.

SCALE: NOT TO SCALE

Inland Empire Utilities Agency
A MUNICIPAL WATER DISTRICT

APPROVED BY:
JASON MARSEILLES, P.E. — JULY 2025
MANAGER OF ENGINEERING — DATE

DESIGN BY: GHD, INC.
APPROVED BY:
CHRIS BARTLEMAN, P.E. — JULY 2025
C81075 — DATE

Inland Empire Utilities Agency

SEWER LATERAL CONNECTION ON NEW SEWER

REVISION			
NO.	BY	DATE	APPROVED

C-LC-003

SHEET 1 OF 1

\\ghdnet\ghd\US\Irvine\Projects\111\11181240 IEUA On Call Engineering Serv\Phase 08 - IEUA Standard Details\4- Delivery Documents\1- CAD\Sheets\Civil Standard Details\C-LC-003.dwg May 30, 2025 - 2:39pm

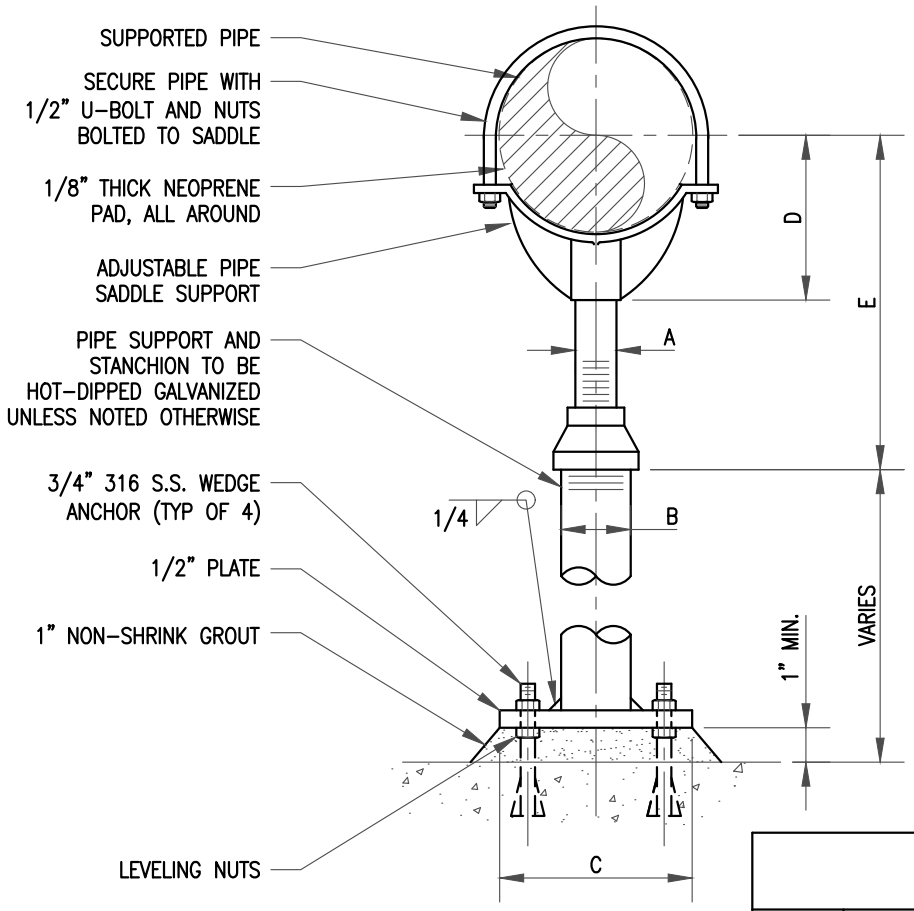

DIMENSION TABLE (INCHES)						
PIPE SIZE	A	B	C	D	E	
					MIN	MAX
2 1/2	1 1/2	2 1/2	9	3 1/2	8	13
3	1 1/2	2 1/2	9	3 3/4	8 1/4	13 1/4
3 1/2	1 1/2	2 1/2	9	4	8 1/2	13 1/2
4	2 1/2	3	9	4 1/4	9 1/4	14
5	2 1/2	3	9	4 7/8	10	14 3/4
6	2 1/2	3	9	5 1/2	10 1/2	15 1/4
8	2 1/2	3	9	6 7/8	11 3/4	16 1/2
10	2 1/2	3	9	8 1/2	13 1/2	18 1/4
12	2 1/2	3	9	9 15/16	15	19 3/4
14	3	4	11	10 15/16	16 1/4	20 3/4
16	3	4	11	12 3/8	17 3/4	22 1/4
18	3 1/2	6	13 1/2	13 7/8	19 1/2	24
20	3 1/2	6	13 1/2	15 3/8	21	25 1/2
24	4	6	13 1/2	17 15/16	23 3/4	28 1/4
30	4	6	15	21 5/16	27	31 1/2
32	4	6	18	22 1/2	28 1/4	32 3/4
36	4	6	18	24 1/2	30 1/4	34 3/4

NOTES:

1. ADJUSTABLE PIPE SADDLE SUPPORT GRINNELL FIG. 265 WITH THREADED PIPE STANCHION GRINNELL FIG. 63T OR APPROVED EQUIVALENT.
2. PIPE STANCHION SADDLE DESIGNED FOR PIPE 4"–36". PIPE LARGER THAN 36" SHALL BE SUPPORTED BY A STANCHION SADDLE DESIGNED BY THE MANUFACTURER.
3. ENGINEER TO EVALUATE USE OF SUPPORTS FOR SEISMIC LOADING, THERMAL EXPANSION, AND THRUST, AND SHALL SPECIFY SUPPORT SPACING.

SCALE: NOT TO SCALE

Inland Empire Utilities Agency
A MUNICIPAL WATER DISTRICT

APPROVED BY:
JASON MARSEILLES, P.E. — JULY 2025
MANAGER OF ENGINEERING — DATE

DESIGN BY: GHD, INC.
APPROVED BY:
CHRIS BARTLEMAN, P.E. — JULY 2025
C81075 — DATE

Inland Empire Utilities Agency

ADJUSTIBLE PIPE SUPPORT

REVISION			
NO.	BY	DATE	APPROVED

M-PS-001

SHEET 1 OF 1

\\ghdnet\ghd\US\Irvine\Projects\111\11181240 IEUA On Call Engineering Serv\Phase 08 – IEUA Standard Details\4– Delivery Documents\1– CAD\Sheets\Mechanical Standard Details\M-PS-001.dwg May 30, 2025 – 2:39pm

MATERIALS

ITEM NO	
1	LDPE ADVANTAGE SERIES AIR AND VACUUM VALVE ENCLOSURE (COLOR: PURPLE OR PER MEMBER AGENCY REQUIREMENTS). COORDINATE ENCLOSURE SIZE WITH AGENCY.
2	2" D-040 A.R.I. VALVE
3	2" MP THREAD X SWEAT ADAPTER
4	2" COPPER TUBING TYPE K RIGID
5	COLD JOINT STRIP
6	2" 90° SWEAT COPPER OR BRASS ELBOW
7	2" CORPORATION STOP
8	SERVICE SADDLE. SEE STANDARD DETAIL RW-LC-002.
9	2" STAINLESS STEEL BALL VALVE
10	2" FLANGED GATE VALVE WITH VALVE BOX PER STANDARD DETAIL RW-VB-001.
11	2" FLANGED X SWEAT ADAPTER. PROVIDE INSULATING FLANGE KIT PER STANDARD DETAIL M-CP-001.

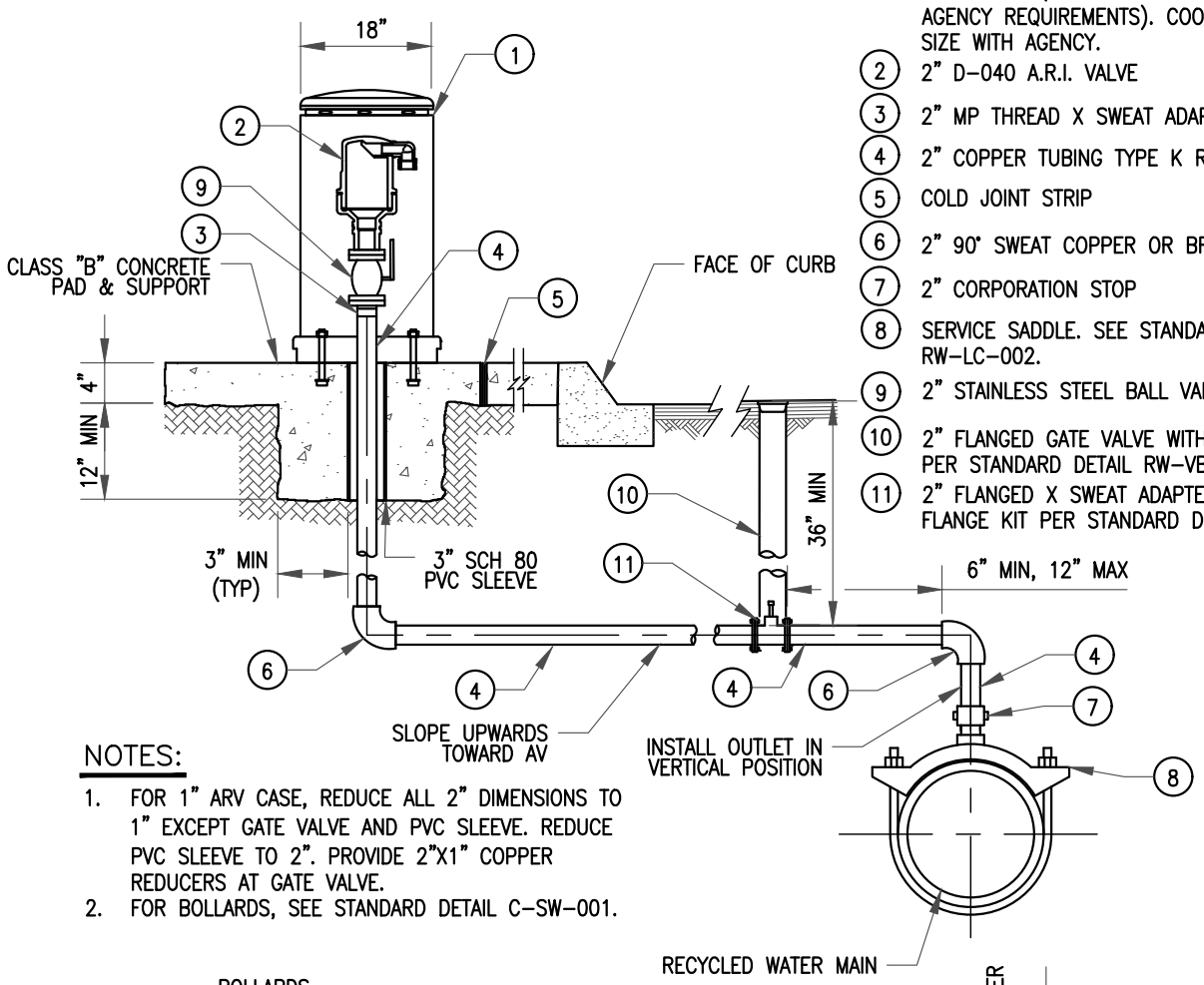

NOTES:

1. FOR 1" ARV CASE, REDUCE ALL 2" DIMENSIONS TO 1" EXCEPT GATE VALVE AND PVC SLEEVE. REDUCE PVC SLEEVE TO 2". PROVIDE 2"X1" COPPER REDUCERS AT GATE VALVE.
2. FOR BOLLARDS, SEE STANDARD DETAIL C-SW-001.

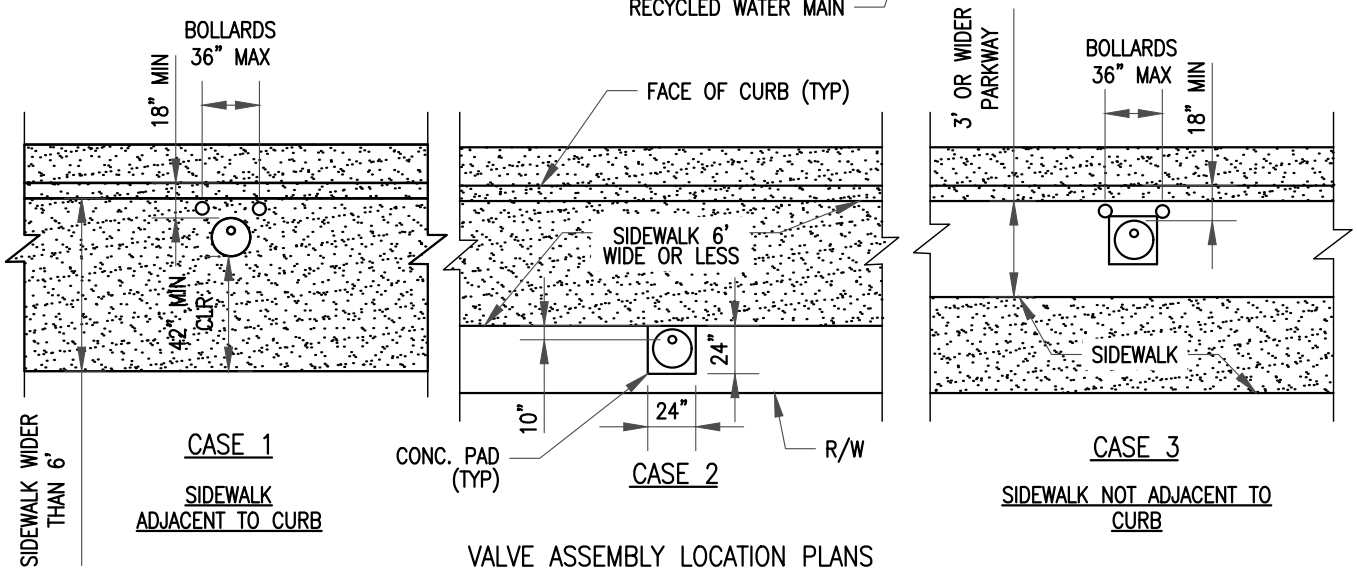

VALVE ASSEMBLY LOCATION PLANS

SCALE: NOT TO SCALE

Inland Empire Utilities Agency
A MUNICIPAL WATER DISTRICT

APPROVED BY:
JASON MARSEILLES, P.E. — JULY 2025
MANAGER OF ENGINEERING — DATE

DESIGN BY: GHD, INC.
APPROVED BY:
CHRIS BARTLEMAN, P.E. — JULY 2025
C81075 — DATE

Inland Empire Utilities Agency

1" OR 2" AIR RELEASE & VACUUM RELIEF VALVE ASSEMBLY

REVISION			
NO.	BY	DATE	APPROVED

RW-AV-001

SHEET 1 OF 1

\\ghdnet\ghd\US\Irvine\Projects\111\11181240 IEUA On Call Engineering Serv\Phase 08 - IEUA Standard Details\4- Delivery Documents\1- CAD\Sheets\Civil Standard Details\RW-AV-001.dwg May 30, 2025 - 2:39pm

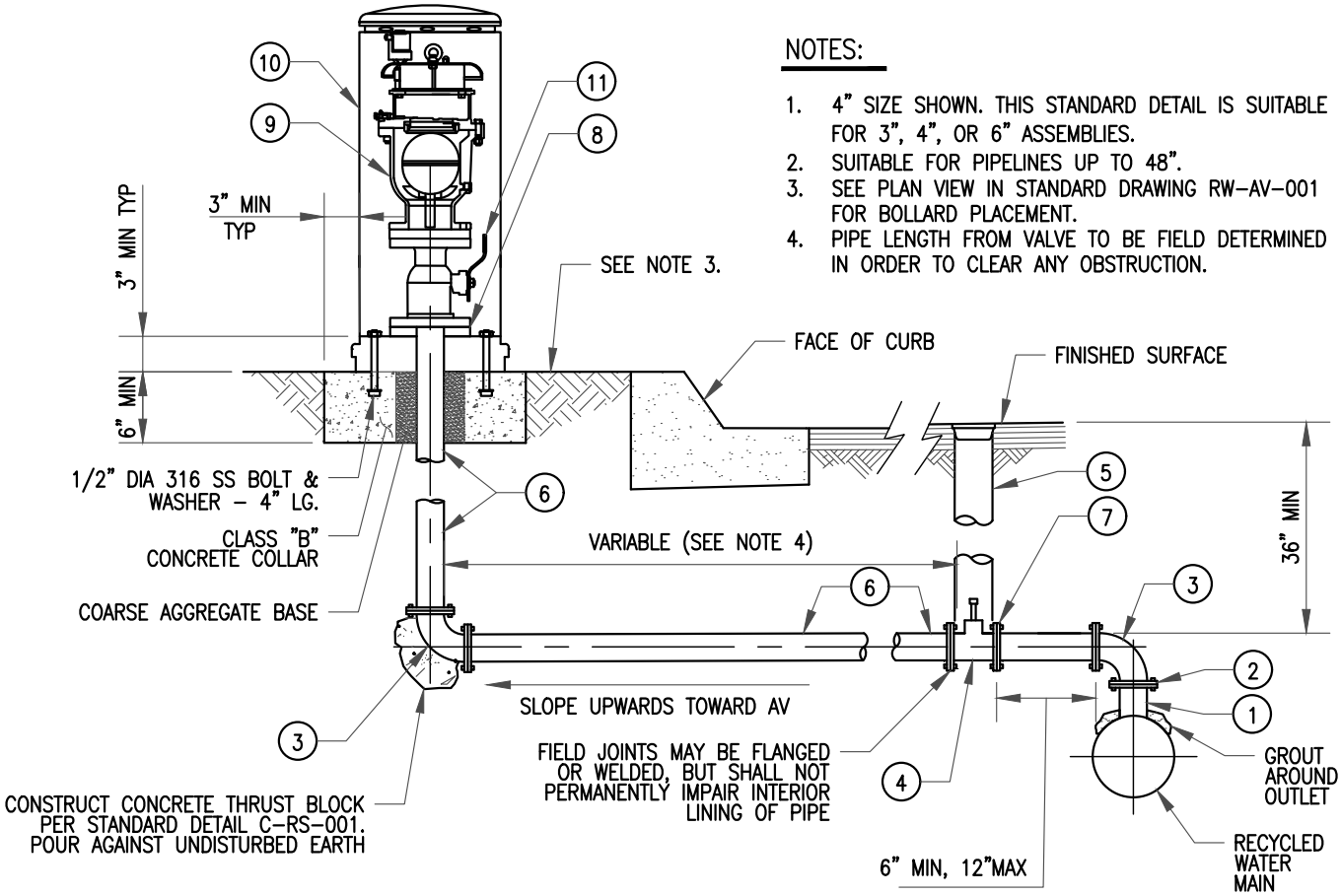

NOTES:

1. 4" SIZE SHOWN. THIS STANDARD DETAIL IS SUITABLE FOR 3", 4", OR 6" ASSEMBLIES.
2. SUITABLE FOR PIPELINES UP TO 48".
3. SEE PLAN VIEW IN STANDARD DRAWING RW-AV-001 FOR BOLLARD PLACEMENT.
4. PIPE LENGTH FROM VALVE TO BE FIELD DETERMINED IN ORDER TO CLEAR ANY OBSTRUCTION.

MATERIAL LIST FOR 4" ARV

ITEM	NO. REQ'D.	DESCRIPTION
1	1	4" FLANGED CONNECTION PER STANDARD DETAIL RW-LC-001.
2	1	4" A.S.A. 250 LB. SLIP-ON FLANGE (SHIP LOOSE FOR FIELD WELDING)
3	2	4" STEEL 90° FLANGED ELBOW, CML&C (STD. RADIUS)
4	1	4" AWWA FLANGED RESILIENT SEAT GATE VALVE WITH 2" SQ. OPERATING NUT. 250 LB. RATING.
5	1	VALVE BOX PER STANDARD DETAIL RW-VB-001.
6	AS NEEDED	4" STEEL SCH. 40 PIPE, CML&C
7	2	4" 250 LB. SLIP-ON FLANGE TO MATCH FLANGE ON GATE VALVE (SHIP LOOSE FOR FIELD WELDING)
8	1	4" 250 LB. SLIP-ON FLANGE TO MATCH FLANGE ON AIR VALVE
9	1	4" D-060-C HF A.R.I. VALVE
10	1	LDPE ADVANTAGE SERIES AIR AND VACUUM VALVE ENCLOSURE (COLOR: PURPLE OR PER MEMBER AGENCY REQUIREMENTS). COORDINATE ENCLOSURE SIZE WITH AGENCY.
11	1	4" FLANGED STAINLESS STEEL BALL VALVE. INCLUDE INSULATING FLANGE KIT. SEE STANDARD DETAIL M-CP-001

SCALE: NOT TO SCALE

Inland Empire Utilities Agency
A MUNICIPAL WATER DISTRICT

APPROVED BY:
JASON MARSEILLES, P.E. — JULY 2025
MANAGER OF ENGINEERING — DATE

DESIGN BY: GHD, INC.
APPROVED BY:
CHRIS BARTLEMAN, P.E. — JULY 2025
C81075 — DATE

Inland Empire Utilities Agency

3", 4", OR 6" AIR RELEASE & VACUUM RELIEF VALVE ASSEMBLY

REVISION			
NO.	BY	DATE	APPROVED

RW-AV-002

SHEET 1 OF 1

\\ghdnet\ghd\US\Irvine\Projects\111\11181240 IEUA On Call Engineering Serv\Phase 08 - IEUA Standard Details\4- Delivery Documents\1- CAD\Sheets\Civil Standard Details\RW-AV-002.dwg May 30, 2025 - 2:39pm

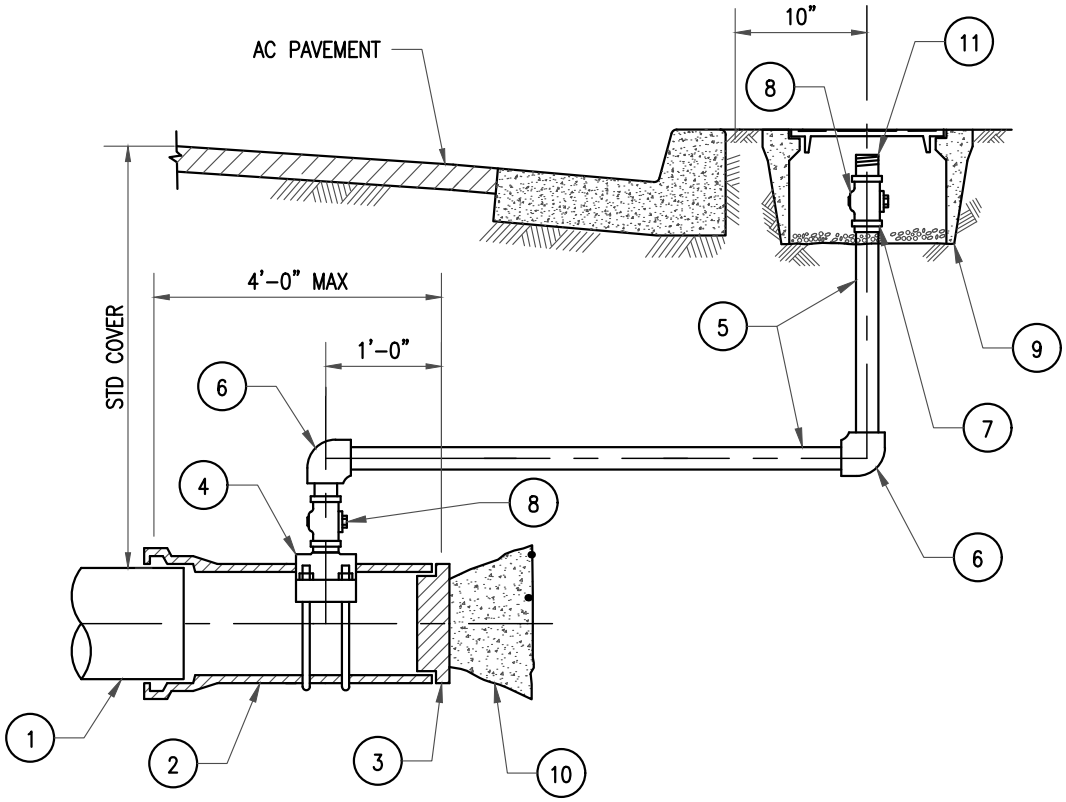

MATERIALS:

1. 4", 6", 8", 10" OR 12" PVC OR DUCTILE IRON PIPE
2. D.I. OR PVC SPOOL
3. D.I.P. PLUG
4. 2" SERVICE SADDLE
5. 2" BRASS OR COPPER TUBING (LENGTH AS NEEDED)
6. 2" BRASS OR COPPER 90 ELBOW
7. 2" M.I.P. X SWEAT COPPER ADAPTER, AS NEEDED
8. 2" BRASS BALL CORP. STOP, FIP X FIP
9. METER BOX, SIMILAR TO DWG. RW-CS-001, WITH NO READING LID
10. THRUST BLOCK PER DWG. C-RS-001
11. 2" BRASS NIPPLE WITH THREAD PROTECTOR

SCALE: NOT TO SCALE

Inland Empire Utilities Agency
A MUNICIPAL WATER DISTRICT

APPROVED BY:
JASON MARSEILLES, P.E. — JULY 2025
MANAGER OF ENGINEERING — DATE

DESIGN BY: GHD, INC.
APPROVED BY:
CHRIS BARTLEMAN, P.E. — JULY 2025
C81075 — DATE

Inland Empire Utilities Agency

PERMANENT END OF LINE BLOW-OFF & CHLORINATION ASSEMBLY

REVISION			
NO.	BY	DATE	APPROVED

RW-BO-003

SHEET 1 OF 1

\\ghdnet\ghd\US\Irvine\Projects\111\11181240 IEUA On Call Engineering Serv\Phase 08 - IEUA Standard Details\4- Delivery Documents\1- CAD\Sheets\Civil Standard Details\RW-BO-003.dwg May 30, 2025 - 2:40pm

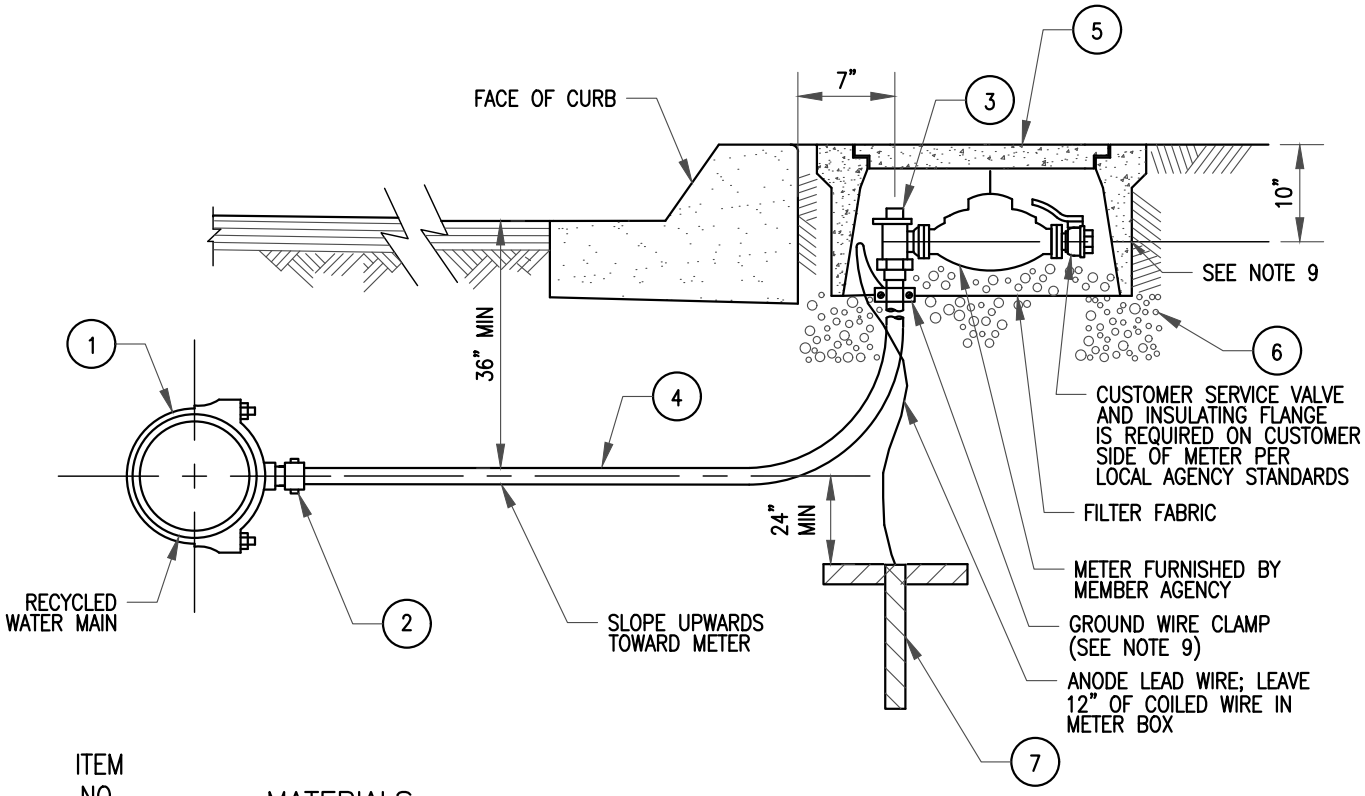

ITEM NO. MATERIALS:

1 — SERVICE SADDLE PER STANDARD DETAIL RW-LC-002.

2 — CORPORATION STOP

3 — 1" X3/4" BRONZE ANGLE METER STOP W/LOCKWING (COMPRESSION TYPE) (JONES J-4201, MUELLER H-14258, FORD KV43-342-W OR APPROVED EQUAL)

4 — 1" COPPER TUBING TYPE K SOFT (MUELLER, HALSTEAD, OR APPROVED EQUAL).

5 — METER BOX W/ READING LID FOR 1" METERS (BROOKS 38-S, EISEL 438, J&R 5 1/2, QUAZITE PC1342 BA, ARMORCAST A6001946 AD PC, OR APPROVED EQUAL).

6 — 3/8" ROCK, 6" MIN THICKNESS

7 — ZINC ANODE AND LEAD WIRE.
ANODE TO BE PLACED VERTICALLY OR HORIZONTALLY AT A MINIMUM SEPARATION OF 2 FEET FROM THE COPPER SERVICE.

SCALE: NOT TO SCALE

Inland Empire Utilities Agency
A MUNICIPAL WATER DISTRICT

APPROVED BY:
JASON MARSEILLES, P.E. — JULY 2025
MANAGER OF ENGINEERING — DATE

DESIGN BY: GHD, INC.
APPROVED BY:
CHRIS BARTLEMAN, P.E. — JULY 2025
C81075 — DATE

Inland Empire Utilities Agency

1" COPPER RECYCLED WATER SERVICE INSTALLATION

REVISION			
NO.	BY	DATE	APPROVED

RW-CS-001

SHEET 1 OF 2

\\ghdnet\ghd\US\Irvine\Projects\111\11181240 IEUA On Call Engineering Serv\Phase 08 - IEUA Standard Details\4- Delivery Documents\1- CAD\Sheets\Civil Standard Details\RW-CS-001.dwg May 30, 2025 - 2:40pm

NOTES:

1. SERVICE SADDLE SHALL NOT BE INSTALLED WITHIN 18" OF VALVE, COUPLING, JOINT OR FITTING. TAPPED COUPLINGS ARE NOT PERMITTED.
2. SET TOP OF METER BOX PER THE LOCAL AGENCY STANDARD REQUIREMENTS.
3. THE RECYCLED WATER SERVICE SHALL EXTEND PERPENDICULAR TO THE CENTERLINE OF THE STREET FROM THE WATER MAIN TO THE METER STOP.
4. ALL SPLICES OF COPPER TUBING SHALL BE SILVER SOLDER CONNECTIONS.
5. METER BOX READING LID FOR ALL RECYCLED WATER SERVICES SHALL BE PAINTED PER THE LOCAL AGENCY STANDARD SPECIFICATIONS.
6. FOR END OF LINE SERVICE INSTALLATION SEE STANDARD DETAIL RW-BO-002.
7. ANODE LEAD WIRE SHALL BE CLAMPED TO COPPER TUBING. CLAMP SHALL BE DIRECT BURIAL TYPE OF RED BRASS WITH BRASS SCREWS AS MANUFACTURED BY DOTTIE, OR APPROVED EQUAL.
8. THIS DETAIL IS A TYPICAL INSTALLATION. SERVICE INSTALLATION SHALL CONFORM TO THE LOCAL AGENCY STANDARDS.
9. CHECK WITH LOCAL AGENCIES/JURISDICTIONS FOR THE DEPTH AND FOOTPRINT OF METER BOX.

SCALE: NOT TO SCALE

Inland Empire Utilities Agency
A MUNICIPAL WATER DISTRICT

APPROVED BY:
JASON MARSEILLES, P.E. — JULY 2025
MANAGER OF ENGINEERING — DATE

DESIGN BY: GHD, INC.
APPROVED BY:
CHRIS BARTLEMAN, P.E. — JULY 2025
C81075 — DATE

Inland Empire Utilities Agency

1" COPPER RECYCLED WATER SERVICE INSTALLATION

REVISION			
NO.	BY	DATE	APPROVED

RW-CS-001

SHEET 2 OF 2

\\ghdnet\ghd\US\Irvine\Projects\111\11181240 IEUA On Call Engineering Serv\Phase 08 - IEUA Standard Details\4- Delivery Documents\1- CAD\Sheets\Civil Standard Details\RW-CS-001.dwg May 30, 2025 - 2:40pm

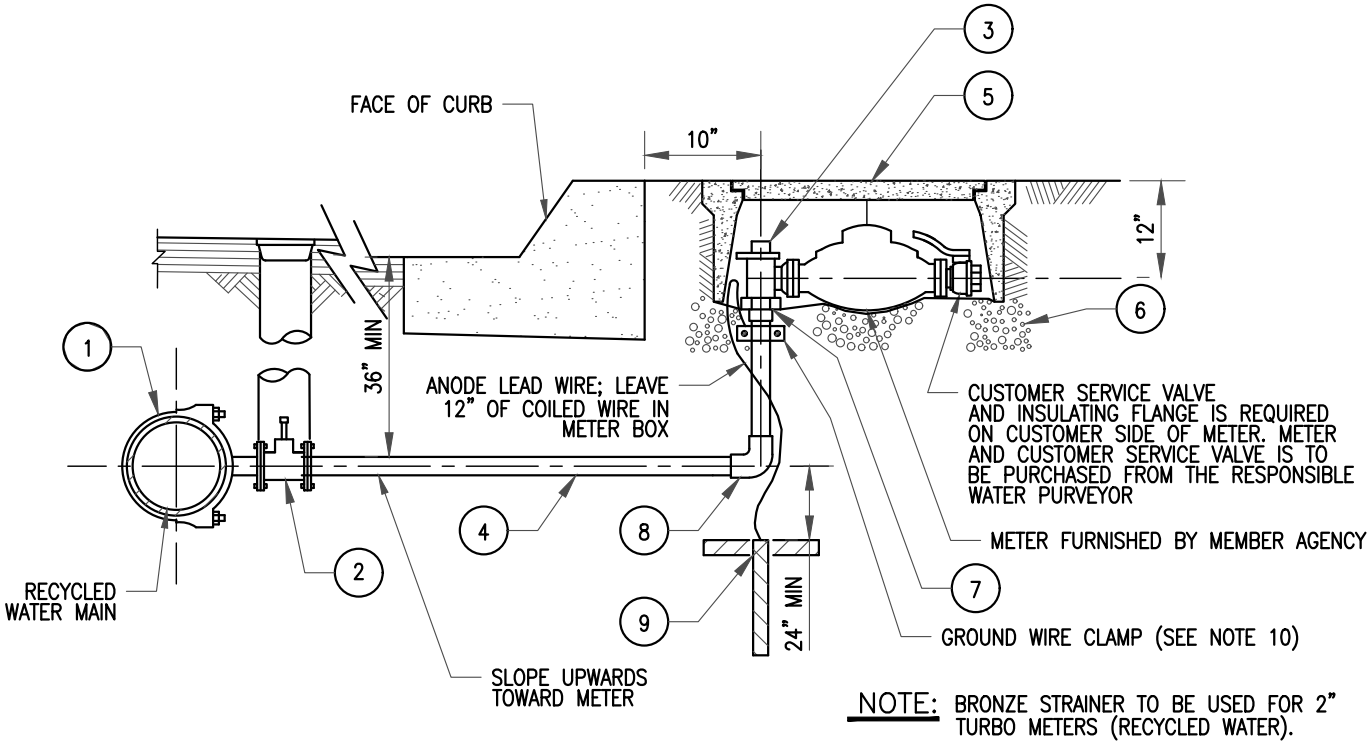

NOTE: BRONZE STRAINER TO BE USED FOR 2" TURBO METERS (RECYCLED WATER).

ITEM NO.	MATERIALS:
1	SERVICE SADDLE PER STANDARD DETAIL RW-LC-002.
2	2" FLANGED GATE VALVE AND VALVE BOX PER STANDARD DETAIL RW-VB-001.
3	2" BRONZE ANGLE METER STOP W/LOCKWING F.I.P. X FLANGE (JONES J-1527-F, MUELLER H-14286, FORD FV13-777W, OR APPROVED EQUAL).
4	2" COPPER TUBING TYPE K SOFT (ANACONDA, PHELPS-DODGE, OR APPROVED EQUAL).
5	METER BOX W/READING LID FOR 2" METER (IF IEUA IS TO SUPPLY) (BROOKS 66-S, EISEL 666 B, J&R 6B, QUAZITE PC-2436 BA, ARMORCAST A6001640 AD PC, OR APPROVED EQUAL)
6	3/8" ROCK, 6" MIN
7	2" ADAPTER, MALE I.P. X SWEAT
8	2" COPPER 90° ELBOW SWEAT
9	ZINC ANODE, AND LEAD WIRE. ANODE IS TO BE PLACED VERTICALLY OR HORIZONTALLY AT A MINIMUM SEPARATION OF 2 FEET FROM THE COPPER SERVICE.

SCALE: NOT TO SCALE

Inland Empire Utilities Agency
A MUNICIPAL WATER DISTRICT

APPROVED BY:
JASON MARSEILLES, P.E. — JULY 2025
MANAGER OF ENGINEERING — DATE

DESIGN BY: GHD, INC.
APPROVED BY:
CHRIS BARTLEMAN, P.E. — JULY 2025
C81075 — DATE

Inland Empire Utilities Agency

2" COPPER RECYCLED WATER SERVICE INSTALLATION

REVISION			
NO.	BY	DATE	APPROVED

RW-CS-002

SHEET 1 OF 2

\\ghdnet\ghd\US\Irvine\Projects\111\11181240 IEUA On Call Engineering Serv\Phase 08 - IEUA Standard Details\4- Delivery Documents\1- CAD\Sheets\Civil Standard Details\RW-CS-002.dwg May 30, 2025 - 2:40pm

NOTES:

1. SERVICE SADDLE SHALL NOT BE INSTALLED WITHIN 18" OF VALVE, COUPLING, JOINT OR FITTING. TAPPED COUPLINGS ARE NOT PERMITTED.
2. SET TOP OF METER BOX PER THE LOCAL AGENCY STANDARD REQUIREMENTS.
3. THE RECYCLED WATER SERVICE SHOULD EXTEND PERPENDICULAR TO THE CENTERLINE OF THE STREET FROM THE WATER MAIN TO THE METER STOP.
4. ALL SPLICES OF COPPER TUBING SHALL BE SILVER SOLDER CONNECTIONS.
5. METER BOX READING LID FOR ALL RECYCLED WATER SERVICES SHALL BE PAINTED PER THE LOCAL AGENCY STANDARD SPECIFICATIONS.
6. ANGLE METER STOP MAY BE SUBSTITUTED FOR THE FEMALE IRON PIPE STYLE WITH MALE IRON BY SWEAT ADAPTERS AS SHOWN.
7. ALL SWEAT JOINTS SHALL BE SILVER SOLDER (EXCEPT AS NOTED).
8. A 1" BYPASS LINE WITH LOCKING CURB STOP MAY BE REQUIRED FOR INSTALLATIONS NEEDING A CONTINUOUS SERVICE.
9. FOR END OF LINE SERVICE INSTALLATION SEE STANDARD DETAIL RW-BO-002.
10. ANODE LEAD WIRE SHALL BE CLAMPED TO COPPER TUBING. CLAMP SHALL BE DIRECT BURIAL TYPE OF RED BRASS WITH BRASS SCREWS AS MANUFACTURED BY DOTTIE, OR APPROVED EQUAL.
11. THIS DETAIL IS A TYPICAL INSTALLATION. SERVICE INSTALLATION SHALL CONFORM TO THE LOCAL AGENCY STANDARDS.
12. CHECK WITH LOCAL AGENCIES/JURISDICTIONS FOR THE DEPTH AND FOOTPRINT OF METER BOX.

SCALE: NOT TO SCALE

Inland Empire Utilities Agency
A MUNICIPAL WATER DISTRICT

APPROVED BY:
JASON MARSEILLES, P.E. — JULY 2025
MANAGER OF ENGINEERING — DATE

DESIGN BY: GHD, INC.
APPROVED BY:
CHRIS BARTLEMAN, P.E. — JULY 2025
C81075 — DATE

Inland Empire Utilities Agency

2" COPPER RECYCLED WATER SERVICE INSTALLATION

REVISION			
NO.	BY	DATE	APPROVED

RW-CS-002

SHEET 2 OF 2

\\ghdnet\ghd\US\Irvine\Projects\111\11181240 IEUA On Call Engineering Serv\Phase 08 - IEUA Standard Details\4- Delivery Documents\1- CAD\Sheets\Civil Standard Details\RW-CS-002.dwg May 30, 2025 - 2:40pm

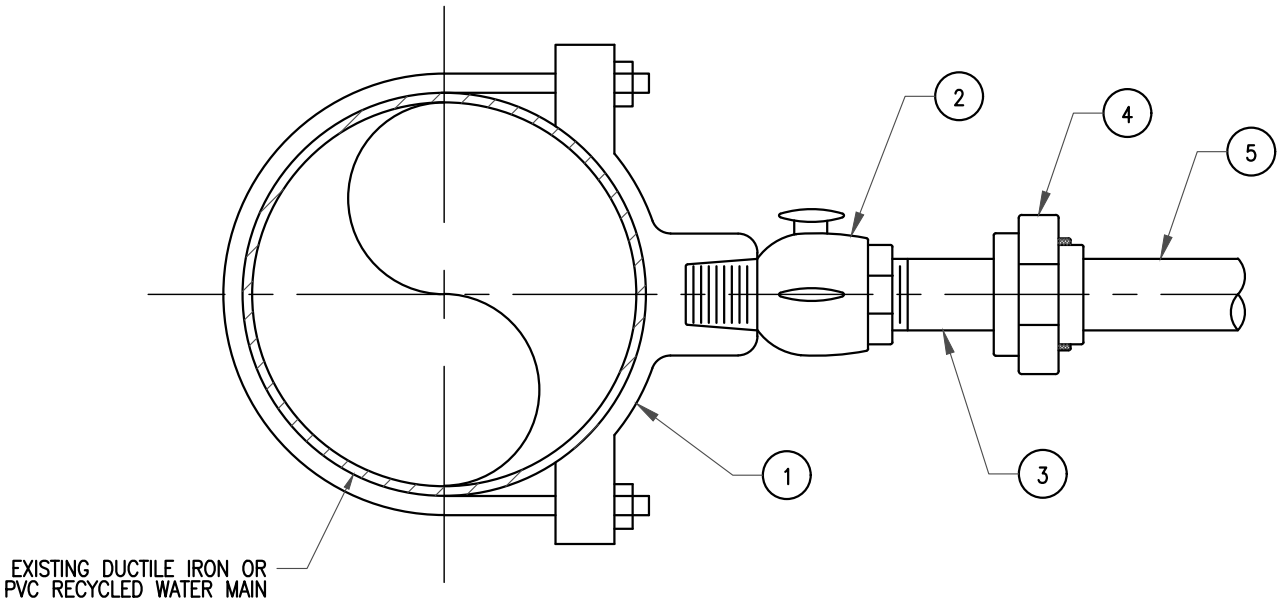

MATERIALS:

1. SERVICE SADDLE WITH F.I.P. OUTLET,
   SINGLE STRAP BRONZE FOR DUCTILE IRON PIPE MAINS,
   CAST BRONZE FOR PVC MAINS
   (JONES MUELLER, FORD, OR APPROVED EQUAL)
2. BRONZE CORPORATION STOP MALE I.P. X F.I.P.
3. NIPPLE MALE I.P. X MALE I.P., BRONZE, FOR DUCTILE IRON PIPE MAINS ONLY (OR APPROVED EQUAL)
4. DIELECTRIC UNION F.I.P. X SWEAT (EPCO, CENTRAL, OR APPROVED EQUAL), FOR DUCTILE IRON PIPE MAINS ONLY
5. COPPER SERVICE TUBING

DUCTILE IRON OR PVC PIPE CONNECTION

SCALE: NOT TO SCALE

Inland Empire Utilities Agency
A MUNICIPAL WATER DISTRICT

APPROVED BY:
JASON MARSEILLES, P.E. — JULY 2025
MANAGER OF ENGINEERING — DATE

DESIGN BY: GHD, INC.
APPROVED BY:
CHRIS BARTLEMAN, P.E. — JULY 2025
C81075 — DATE

Inland Empire Utilities Agency

LATERAL CONNECTION FOR
2" AND SMALLER COPPER SERVICE

REVISION			
NO.	BY	DATE	APPROVED

RW-LC-002

SHEET 1 OF 2

\\ghdnet\ghd\US\Irvine\Projects\111\11181240 IEUA On Call Engineering Serv\Phase 08 - IEUA Standard Details\4- Delivery Documents\1- CAD\Sheets\Civil Standard Details\RW-LC-002.dwg May 30, 2025 - 2:40pm

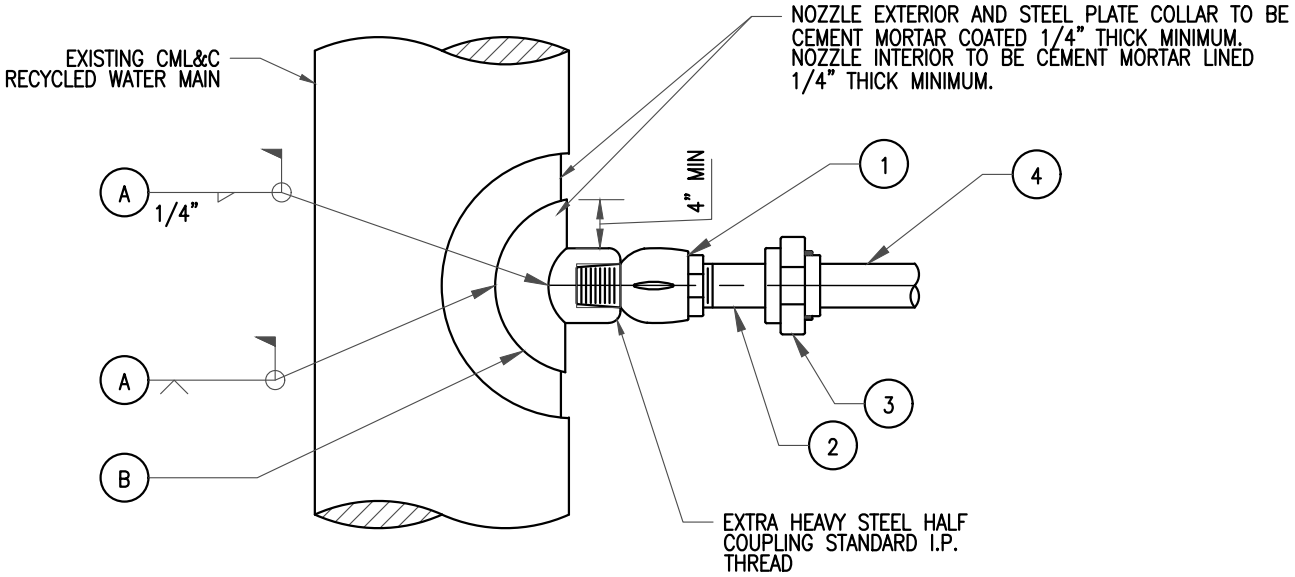

MATERIALS:

1. BRONZE CORPORATION STOP MALE I.P. X F.I.P. (OR APPROVED EQUAL)
2. NIPPLE MALE I.P. X MALE I.P., BRONZE.
3. DIELECTRIC UNION F.I.P. X SWEAT (EPCO, CENTRAL, OR APPROVED EQUAL)
4. COPPER SERVICE TUBING

CONSTRUCTION NOTES:

A. FILLET WELD NOZZLE AND COLLAR TO PIPE WALL

B. AIR TEST NOZZLE AND COLLAR

CML&C STEEL PIPE CONNECTION

SCALE: NOT TO SCALE

Inland Empire Utilities Agency
A MUNICIPAL WATER DISTRICT

APPROVED BY:
JASON MARSEILLES, P.E. — JULY 2025
MANAGER OF ENGINEERING — DATE

DESIGN BY: GHD, INC.
APPROVED BY:
CHRIS BARTLEMAN, P.E. — JULY 2025
C81075 — DATE

Inland Empire Utilities Agency

LATERAL CONNECTION FOR 2" AND SMALLER COPPER SERVICE

REVISION			
NO.	BY	DATE	APPROVED

RW-LC-002

SHEET 2 OF 2

\\ghdnet\ghd\US\Irvine\Projects\111\11181240 IEUA On Call Engineering Serv\Phase 08 - IEUA Standard Details\4- Delivery Documents\1- CAD\Sheets\Civil Standard Details\RW-LC-002.dwg May 30, 2025 - 2:40pm

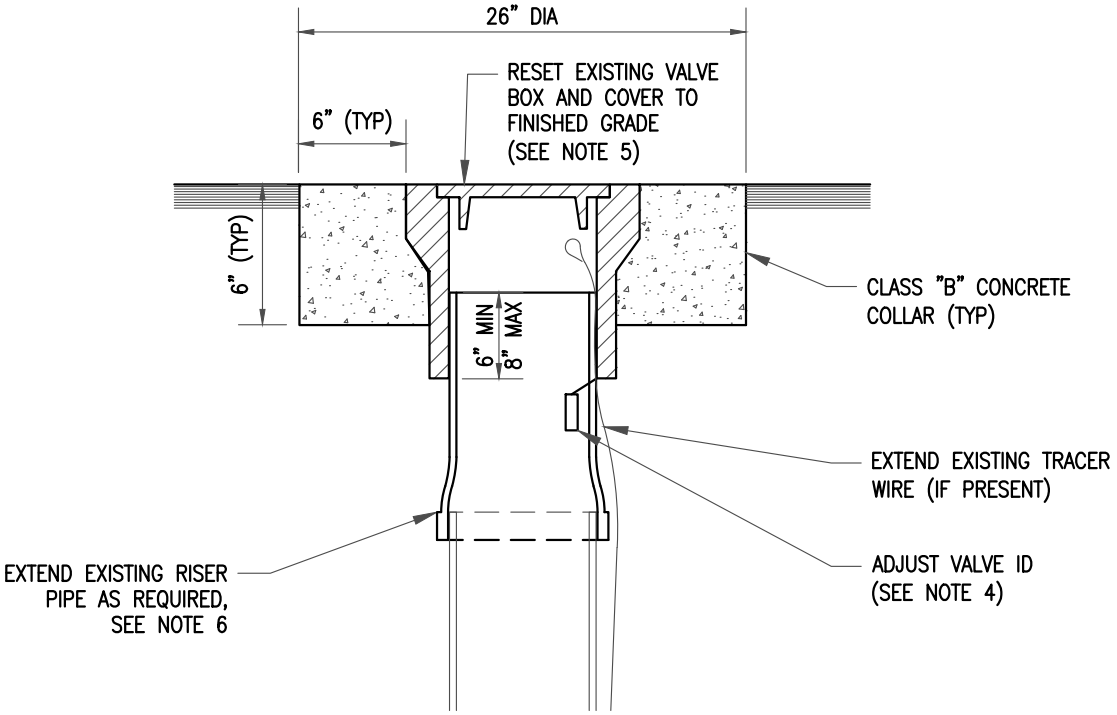

NOTES:

1. THE CONTRACTOR SHALL COMPLETELY DEMOLISH EXISTING CONCRETE COLLAR TO DEPTH OF 6".
2. IN VEHICULAR AREA, EXISTING NON-TRAFFIC RATED UTILITY BOXES AND COVERS SHALL BE REPLACED WITH TRAFFIC RATED BOXES AND COVERS PER STANDARD RW-VB-001.
3. ADJUSTED CONCRETE COLLAR MAY BE POURED MONOLITHICALLY WITH NEW CONCRETE PAVING.
4. PROVIDE VALVE ID PER STANDARD RW-VI-001 IF NOT PRESENT. VALVE NUMBER PROVIDED BY IEUA.
5. VALVE BOX AND COVER TO BE REPLACED IF NOT PER STANDARD RW-VB-001.
6. RISER PIPE SHALL BE COLORED BASED ON CONVEYANCE PIPE FLUID AS FOLLOWS:
   PURPLE = RECYCLED WATER
   BLUE = WATER
   GREEN = SEWER
   WHITE = OTHERS

SCALE: NOT TO SCALE

Inland Empire Utilities Agency
A MUNICIPAL WATER DISTRICT

APPROVED BY:
JASON MARSEILLES, P.E. — JULY 2025
MANAGER OF ENGINEERING — DATE

DESIGN BY: GHD, INC.
APPROVED BY:
CHRIS BARTLEMAN, P.E. — JULY 2025
C81075 — DATE

Inland Empire Utilities Agency

VALVE BOX
ADJUSTMENT TO GRADE

REVISION			
NO.	BY	DATE	APPROVED

RW-VB-002

SHEET 1 OF 1

\\ghdnet\ghd\US\Irvine\Projects\111\11181240 IEUA On Call Engineering Serv\Phase 08 - IEUA Standard Details\4- Delivery Documents\1- CAD\Sheets\Civil Standard Details\RW-VB-002.dwg May 30, 2025 - 2:41pm

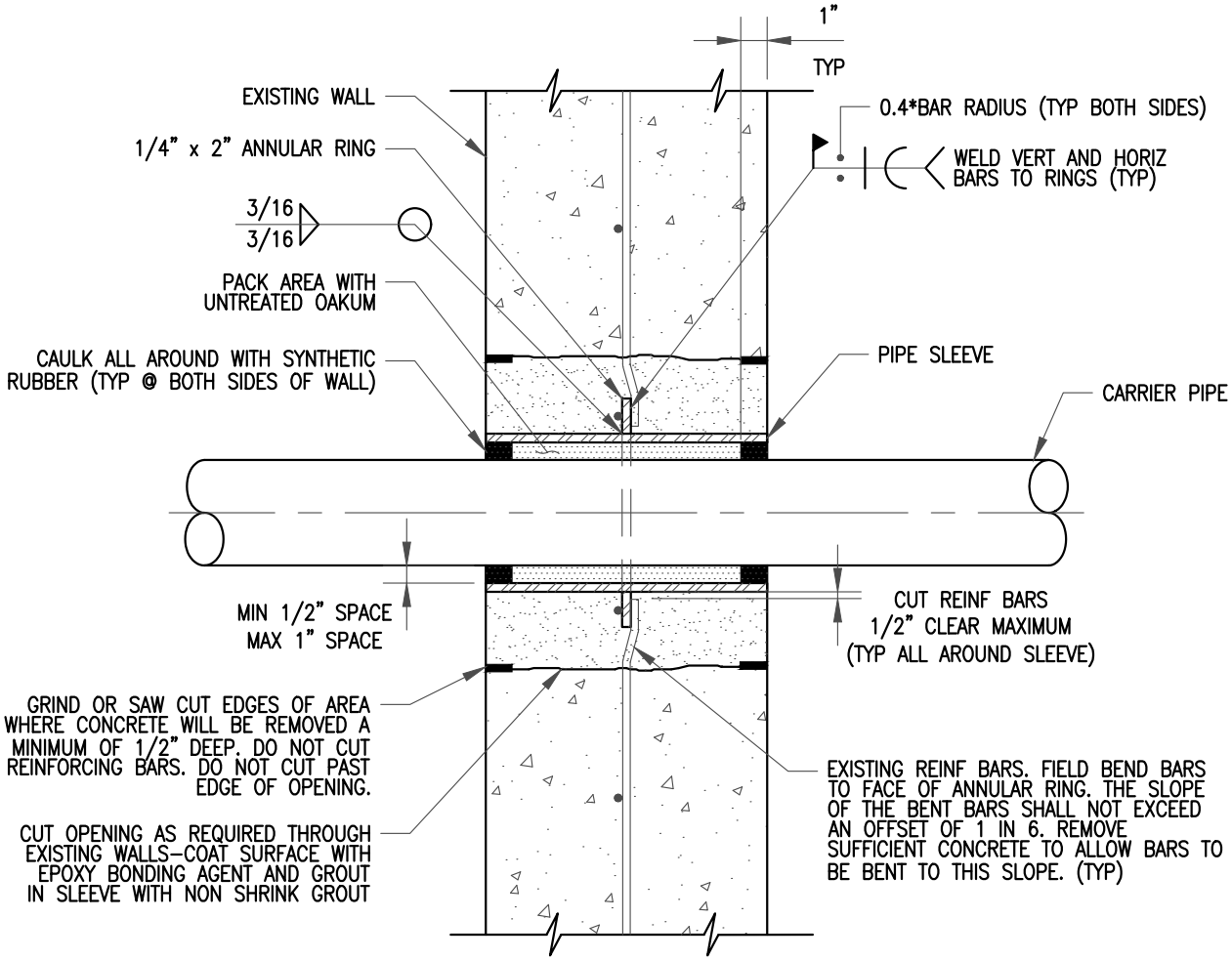

NOTES:

1. THIS DETAIL APPLIES TO ABOVE GROUND APPLICATIONS.
2. FOR NEW CONSTRUCTION, SLEEVES SHALL BE CAST INTO WALL. BLOCKOUTS AND SUBSEQUENT GROUTING IN SLEEVES SHALL NOT BE PERMITTED UNTIL A KEYED WATERSTOP JOINT IS PROVIDED.
3. 6" DIA SLEEVES AND SMALLER SHALL BE SCHEDULE 40 MIN STEEL PIPE.
4. 8" DIA SLEEVES AND LARGER SHALL BE 1/4" THICK STEEL PIPE.
5. NEOPRENE LINK SEALS WITH STAINLESS STEEL BOLTS MAY BE SUBSTITUTED FOR OAKUM AND RUBBER SEAL. SLEEVE DIAMETER SHALL BE PER LINK SEAL MANUFACTURER'S RECOMMENDATION.
6. SLEEVE SHALL BE HOT-DIPPED GALVANIZED AFTER FABRICATION.

SCALE: NOT TO SCALE

Inland Empire Utilities Agency
A MUNICIPAL WATER DISTRICT

APPROVED BY:
JASON MARSEILLES, P.E. — JULY 2025
MANAGER OF ENGINEERING — DATE

DESIGN BY: GHD, INC.
APPROVED BY:
CHRIS BARTLEMAN, P.E. — JULY 2025
C81075 — DATE

Inland Empire Utilities Agency

WALL PENETRATION

REVISION			
NO.	BY	DATE	APPROVED

M-WP-001

SHEET 1 OF 1

\\ghdnet\ghd\US\Irvine\Projects\111\11181240 IEUA On Call Engineering Serv\Phase 08 - IEUA Standard Details\4- Delivery Documents\1- CAD\Sheets\Mechanical Standard Details\M-WP-001.dwg May 30, 2025 - 2:41pm

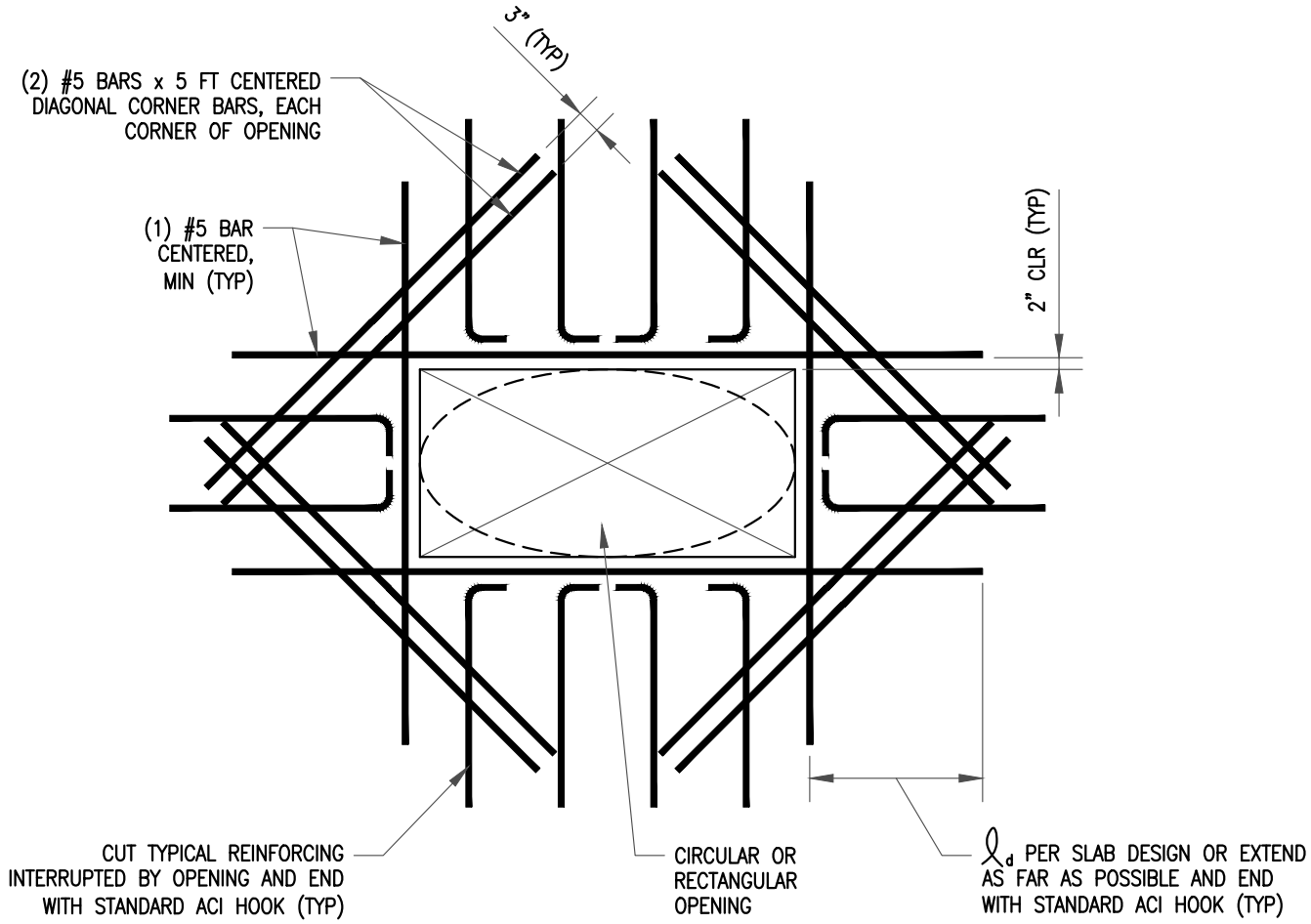

NOTES:

1. FOR ROUND OPENING USE CIRCUMSCRIBING RECTANGLE FOR REINFORCING APPLICATION.
2. PROVIDE EXTRA BARS (NOT SHOWN) PARALLEL TO SIDES OF OPENINGS EQUAL TO AREAS OF INTERRUPTED SLAB BARS. EXTEND FULL LENGTH OF SPAN AND/OR LENGTH OF INTERRUPTED BARS AS APPLICABLE.
3. PLACE ADDITIONAL REINFORCING IN SAME PLANE AS INTERRUPTED REINFORCING FOR EACH MAT OF REINFORCING.
4. TYPICAL AT OPENINGS UP TO 4'-0" MAXIMUM, UNLESS NOTED OTHERWISE.
5. ℓ_d = DEVELOPMENT LENGTH PER ACI STANDARDS.
6. WALL OR SLAB SUPPORT PIPE THROUGH OPENING TO BE DESIGNED PER ACI STANDARD TO SUPPORT MAXIMUM LOAD OF PIPE.

SCALE: NOT TO SCALE

Inland Empire Utilities Agency
A MUNICIPAL WATER DISTRICT

APPROVED BY:
JASON MARSEILLES, P.E. — JULY 2025
MANAGER OF ENGINEERING — DATE

DESIGN BY: GHD, INC.
APPROVED BY:
CHRIS BARTLEMAN, P.E. — JULY 2025
C81075 — DATE

Inland Empire Utilities Agency

REINFORCING AT OPENINGS

REVISION			
NO.	BY	DATE	APPROVED

M-WP-002

SHEET 1 OF 1

\\ghdnet\ghd\US\Irvine\Projects\111\11181240 IEUA On Call Engineering Serv\Phase 08 - IEUA Standard Details\4- Delivery Documents\1- CAD\Sheets\Mechanical Standard Details\M-WP-002.dwg May 30, 2025 - 2:41pm

NOTES

1. CLEANOUT DETAIL FOR 4" AND 6" GRAVITY AND PRESSURE SEWER SERVICE LATERALS. CLEANOUTS FOR SEWER FORCE MAINS SHALL BE PER STANDARD DETAIL C-MH-002.
2. CLEANOUT RISER PIPE SIZE TO MATCH SEWER PIPE SIZE.
3. INSTALL FITTINGS AND REDUCERS AS REQUIRED.
4. FOR CLEANOUTS ON PRESSURE SEWER LATERALS, PROVIDE CONCRETE THRUST BLOCKS, JOINTS AND FITTINGS, SCREW ON BRASS PLUG OR FLANGED END PIPE WITH BLIND FLANGE CAP TO WITHSTAND THE FIELD TEST PRESSURE. SEE SHEET 3 FOR CLEANOUT BOX ON PRESSURE SEWER LATERALS. PROVIDE THRUST BLOCKS PER STANDARD DETAIL C-RS-001.

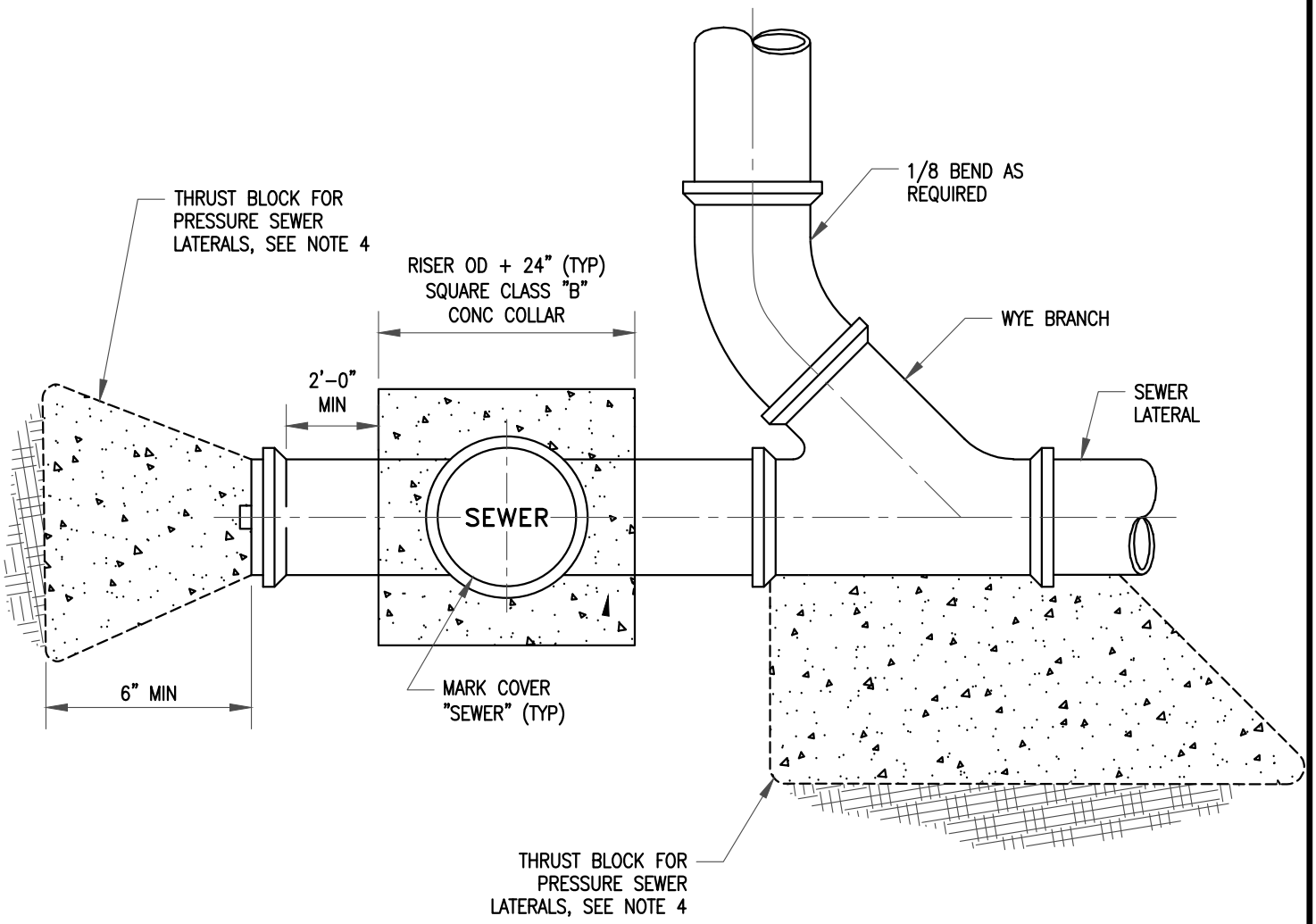

PLAN

SCALE: NOT TO SCALE

Inland Empire Utilities Agency
A MUNICIPAL WATER DISTRICT

APPROVED BY:
JASON MARSEILLES, P.E. — JULY 2025
MANAGER OF ENGINEERING — DATE

DESIGN BY: GHD, INC.
APPROVED BY:
CHRIS BARTLEMAN, P.E. — JULY 2025
C81075 — DATE

Inland Empire Utilities Agency

SEWER CLEANOUT
GRAVITY AND PRESSURE LATERAL

REVISION			
NO.	BY	DATE	APPROVED

C-CO-001

SHEET 1 OF 3

\\ghdnet\ghd\US\Irvine\Projects\111\11181240 IEUA On Call Engineering Serv\Phase 08 - IEUA Standard Details\4- Delivery Documents\1- CAD\Sheets\Civil Standard Details\C-CO-001.dwg May 30, 2025 - 2:41pm

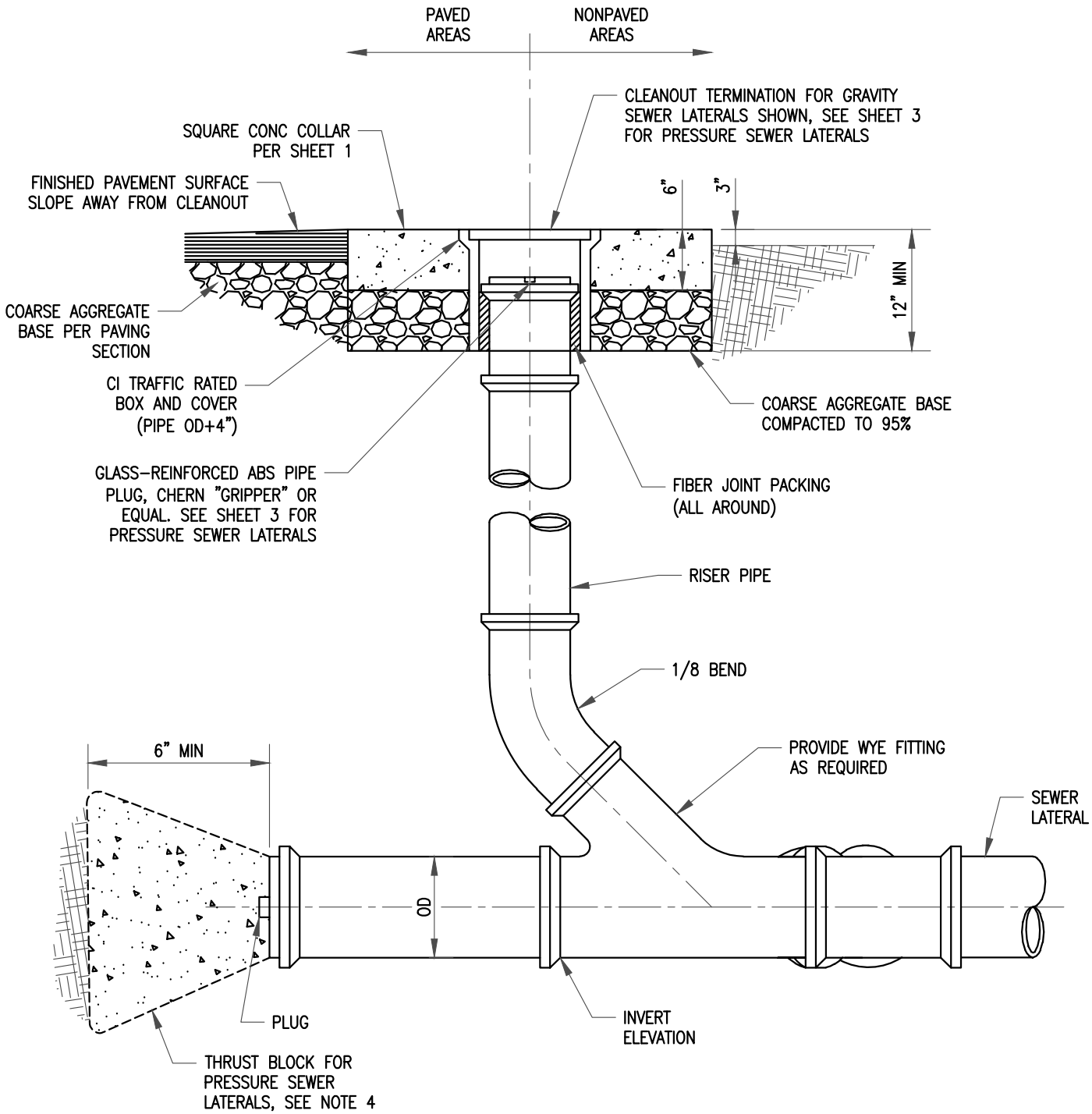

ELEVATION

SCALE: NOT TO SCALE

Inland Empire Utilities Agency
A MUNICIPAL WATER DISTRICT

APPROVED BY:

JASON MARSEILLES, P.E. — JULY 2025
MANAGER OF ENGINEERING — DATE

DESIGN BY: GHD, INC.

APPROVED BY:
CHRIS BARTLEMAN, P.E. — JULY 2025
C81075 — DATE

Inland Empire Utilities Agency

SEWER CLEANOUT
GRAVITY AND PRESSURE LATERAL

REVISION			
NO.	BY	DATE	APPROVED

C-CO-001

SHEET 2 OF 3

\\ghdnet\ghd\US\Irvine\Projects\111\11181240 IEUA On Call Engineering Serv\Phase 08 - IEUA Standard Details\4- Delivery Documents\1- CAD\Sheets\Civil Standard Details\C-CO-001.dwg May 30, 2025 - 2:41pm

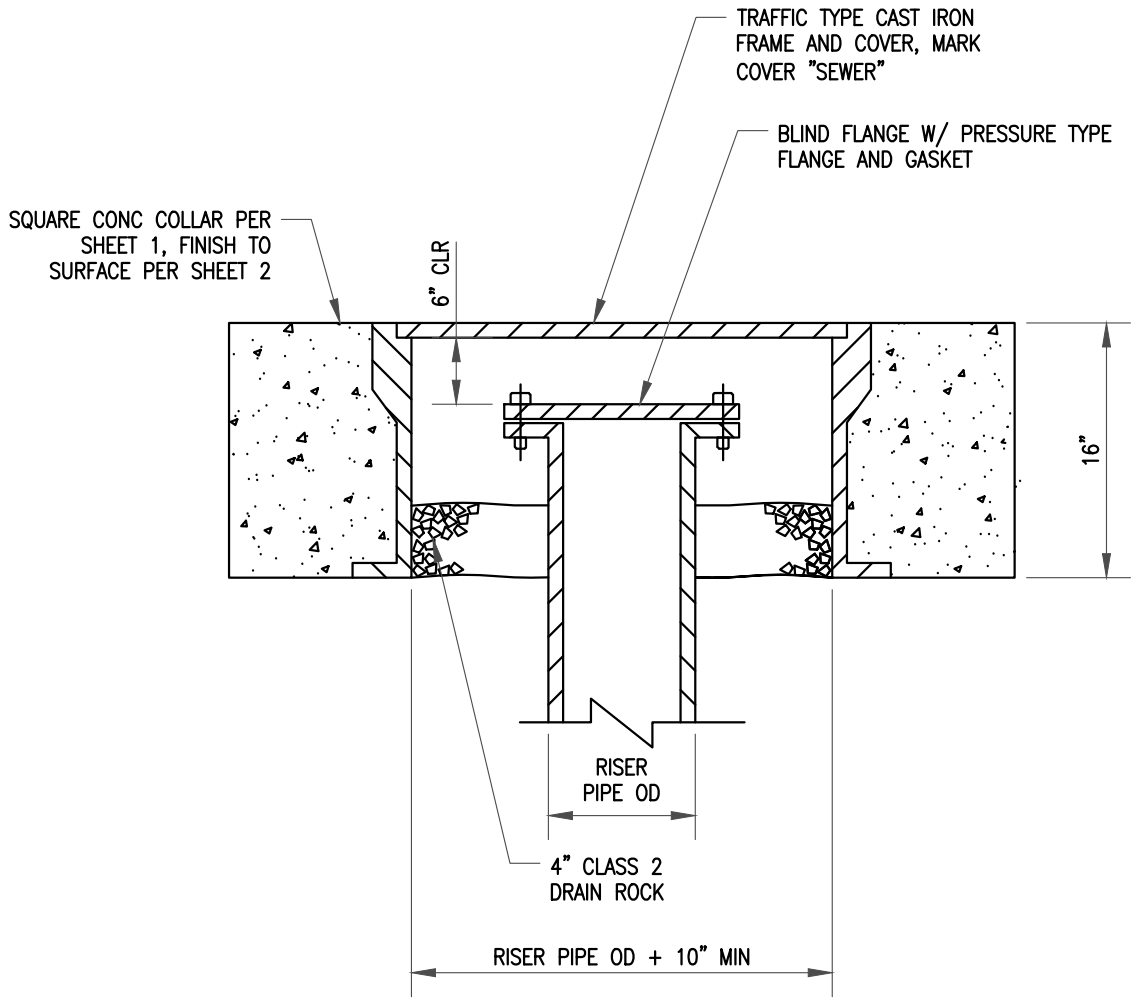

CLEANOUT BOX FOR PRESSURE SEWER LATERALS

SCALE: NOT TO SCALE

Inland Empire Utilities Agency
A MUNICIPAL WATER DISTRICT

APPROVED BY:
JASON MARSEILLES, P.E. — JULY 2025
MANAGER OF ENGINEERING — DATE

DESIGN BY: GHD, INC.
APPROVED BY:
CHRIS BARTLEMAN, P.E. — JULY 2025
C81075 — DATE

Inland Empire Utilities Agency

SEWER CLEANOUT
GRAVITY AND PRESSURE LATERAL

REVISION			
NO.	BY	DATE	APPROVED

C-CO-001

SHEET 3 OF 3

\\ghdnet\ghd\US\Irvine\Projects\111\11181240 IEUA On Call Engineering Serv\Phase 08 - IEUA Standard Details\4- Delivery Documents\1- CAD\Sheets\Civil Standard Details\C-CO-001.dwg May 30, 2025 - 2:41pm

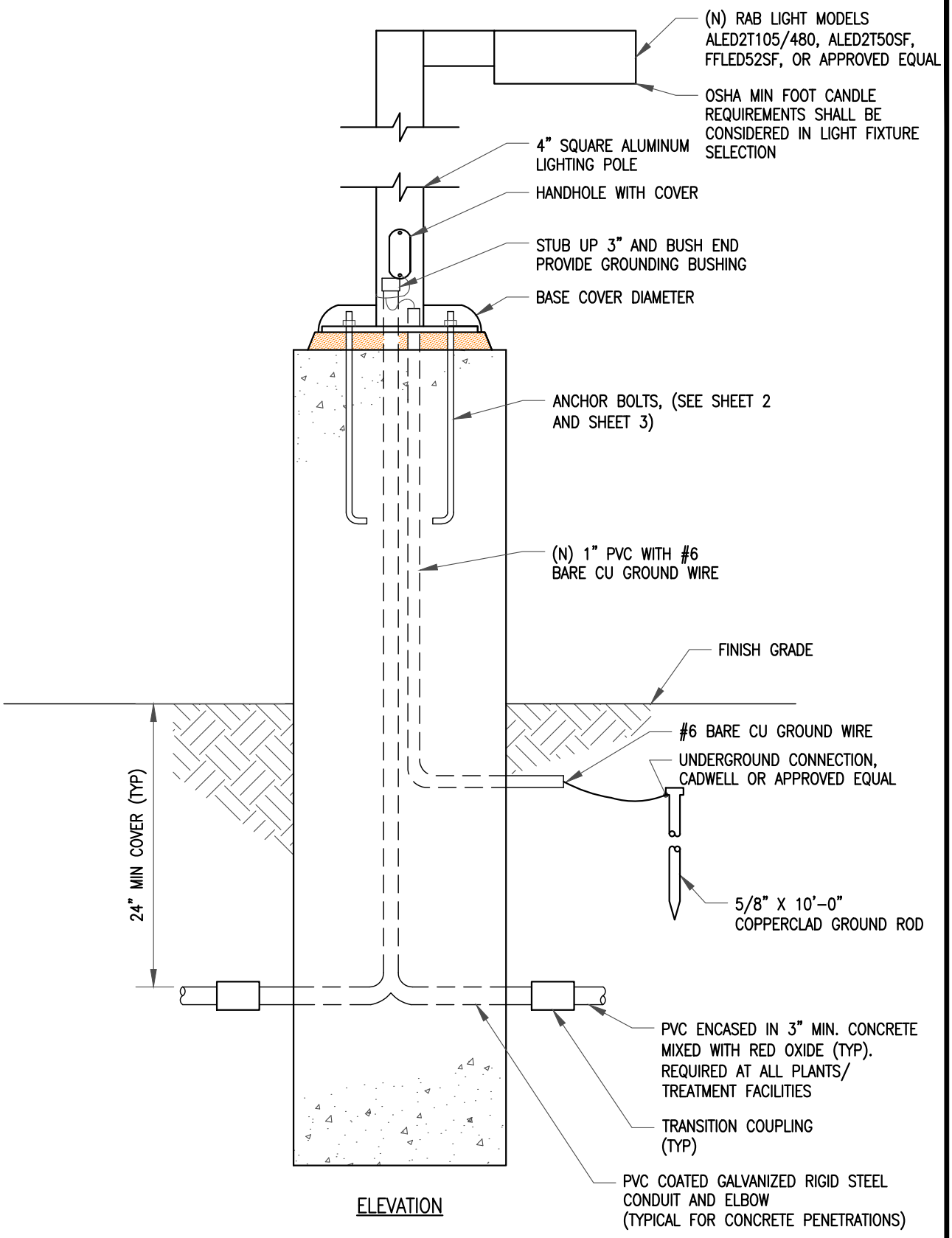

ELEVATION

SCALE: NOT TO SCALE

Inland Empire Utilities Agency
A MUNICIPAL WATER DISTRICT

APPROVED BY:

JASON MARSEILLES, P.E. — JULY 2025
MANAGER OF ENGINEERING — DATE

DESIGN BY: GHD, INC.

APPROVED BY:
CHRIS BARTLEMAN, P.E. — JULY 2025
C81075 — DATE

Inland Empire Utilities Agency

LIGHTING POLE
ELECTRICAL

REVISION			
NO.	BY	DATE	APPROVED

S-LP-001

SHEET 1 OF 4

\\ghdnet\ghd\US\Irvine\Projects\111\11181240 IEUA On Call Engineering Serv\Phase 08 - IEUA Standard Details\4- Delivery Documents\1- CAD\Sheets\Structural Standard Details\S-LP-001.dwg May 30, 2025 - 2:41pm

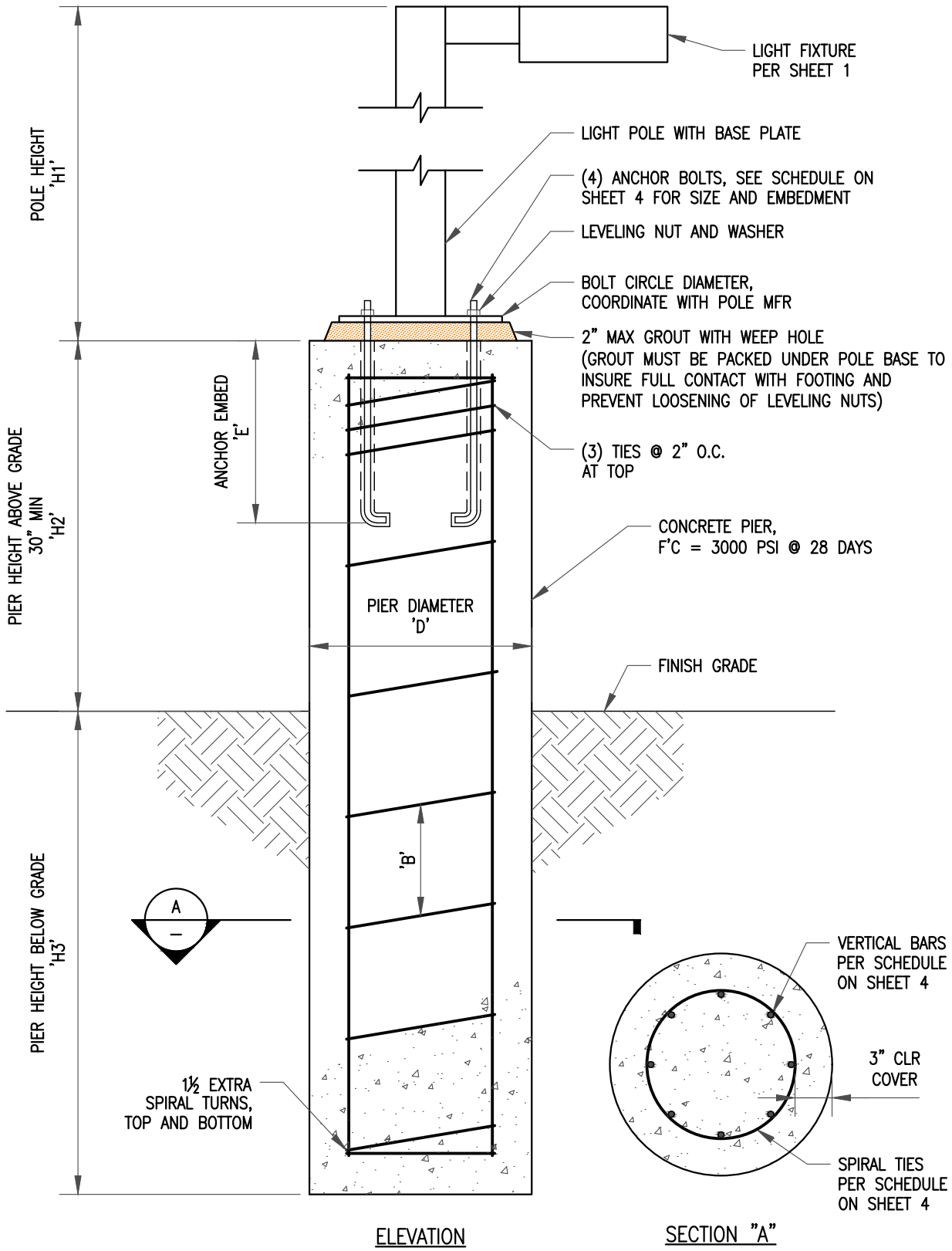

SCALE: NOT TO SCALE

Inland Empire Utilities Agency
A MUNICIPAL WATER DISTRICT

APPROVED BY:

JASON MARSEILLES, P.E. — JULY 2025
MANAGER OF ENGINEERING — DATE

DESIGN BY: GHD, INC.

APPROVED BY:
CHRIS BARTLEMAN, P.E. — JULY 2025
C81075 — DATE

Inland Empire Utilities Agency

LIGHTING POLE
ELECTRICAL

REVISION			
NO.	BY	DATE	APPROVED

S-LP-001

SHEET 2 OF 4

\\ghdnet\ghd\US\Irvine\Projects\111\11181240 IEUA On Call Engineering Serv\Phase 08 - IEUA Standard Details\4- Delivery Documents\1- CAD\Sheets\Structural Standard Details\S-LP-001.dwg May 30, 2025 - 2:41pm

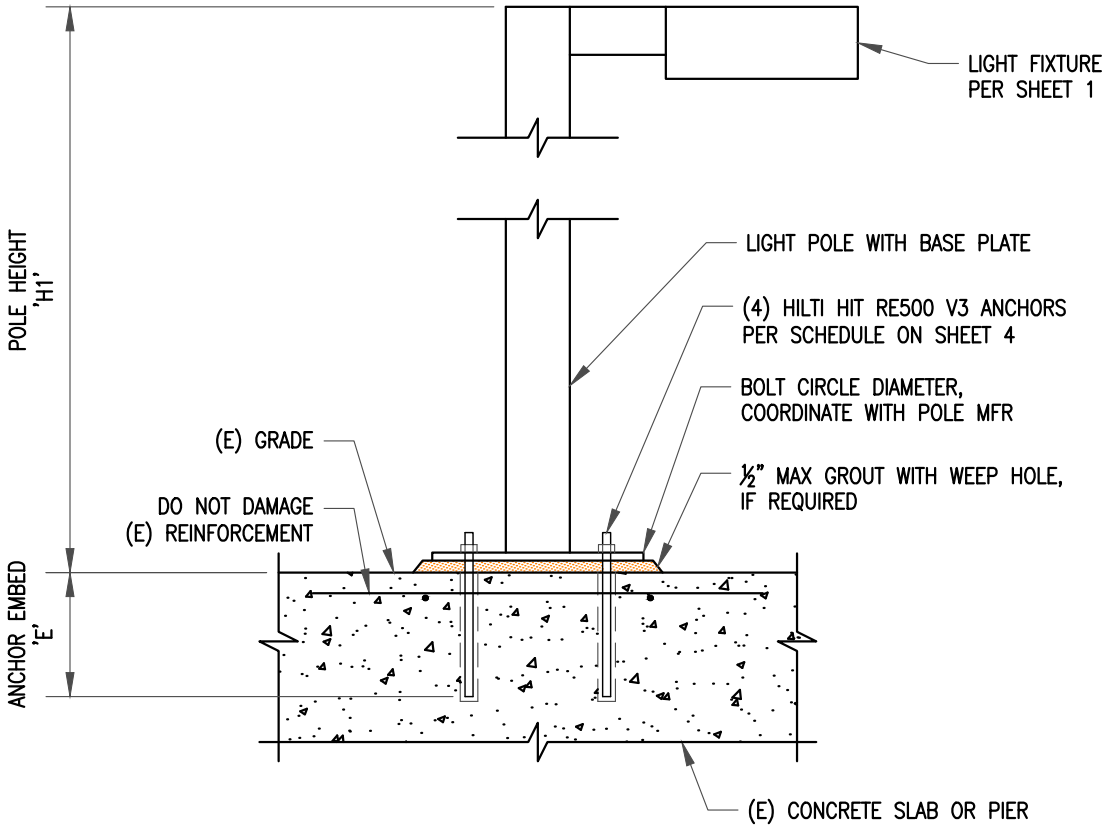

SCALE: NOT TO SCALE

Inland Empire Utilities Agency
A MUNICIPAL WATER DISTRICT

APPROVED BY:

JASON MARSEILLES, P.E. — JULY 2025
MANAGER OF ENGINEERING — DATE

DESIGN BY: GHD, INC.

APPROVED BY:
CHRIS BARTLEMAN, P.E. — JULY 2025
C81075 — DATE

Inland Empire Utilities Agency

LIGHTING POLE
ELECTRICAL

REVISION			
NO.	BY	DATE	APPROVED

S-LP-001

SHEET 3 OF 4

\\ghdnet\ghd\US\Irvine\Projects\111\11181240 IEUA On Call Engineering Serv\Phase 08 - IEUA Standard Details\4- Delivery Documents\1- CAD\Sheets\Structural Standard Details\S-LP-001.dwg May 30, 2025 - 2:42pm

POST BASE SCHEDULE									
NEW/EXISTING CONCRETE BASE	POLE HEIGHT 'H1' (FT)	PIER DIAMETER 'D' (IN)	PIER HEIGHT ABOVE GRADE 'H2' (IN)	PIER EMBEDMENT 'H3' (FT)	VERTICAL BARS	SPIRAL BAR SIZE	SPIRAL BAR SPACING 'B' (IN)	ANCHOR DIAMETER (IN)	ANCHOR EMBED 'E' (IN)
NEW	25	30	30	6	8 #6	#4	12	1	36
NEW	10	24	30	4	6 #6	#4	12	3/4	18 3/4
NEW	25	18*	30	7	4 #5	#3	9	1	36
NEW	10	16*	30	4	4 #5	#3	8	3/4	18 3/4
*REDUCED PIER DIAMETER WITH IEUA APPROVAL, IF REQUIRED DUE TO SITE CONSTRAINTS.									

SEISMIC DESIGN CRITERIA

- SITE CLASS: D
- OCCUPANCY CATEGORY: II
- IMPORTANCE FACTOR: 1.0
- STRUCTURE TYPE: STEEL ORDINARY CANTILEVER COLUMN

WIND DESIGN CRITERIA:

- BASIC WIND SPEED: 110 MPH
- OCCUPANCY CATEGORY: II
- EXPOSURE CATEGORY: C
- IMPORTANCE FACTOR: 1.0
- WIND DIRECTIONALITY FACTOR: 0.9–0.95

SCALE: NOT TO SCALE

Inland Empire Utilities Agency
A MUNICIPAL WATER DISTRICT

APPROVED BY:
JASON MARSEILLES, P.E. — JULY 2025
MANAGER OF ENGINEERING — DATE

DESIGN BY: GHD, INC.
APPROVED BY:
CHRIS BARTLEMAN, P.E. — JULY 2025
C81075 — DATE

Inland Empire Utilities Agency

LIGHTING POLE
ELECTRICAL

REVISION			
NO.	BY	DATE	APPROVED

S-LP-001

SHEET 4 OF 4

\\ghdnet\ghd\US\Irvine\Projects\111\11181240 IEUA On Call Engineering Serv\Phase 08 – IEUA Standard Details\4– Delivery Documents\1– CAD\Sheets\Structural Standard Details\S-LP-001.dwg May 30, 2025 – 2:42pm

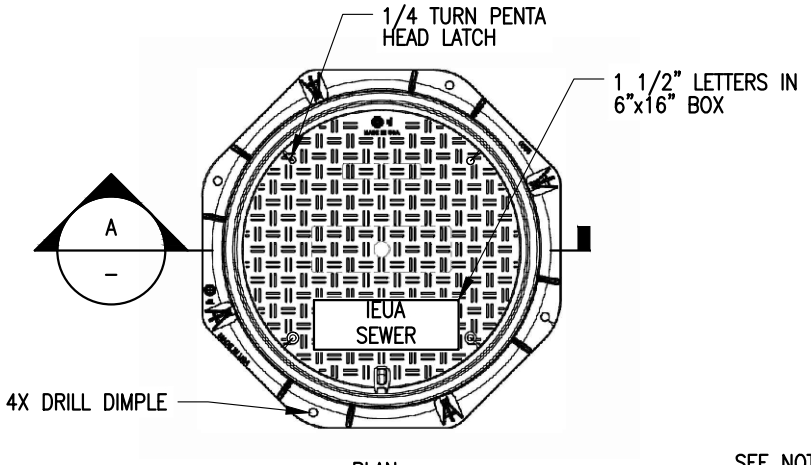

PLAN

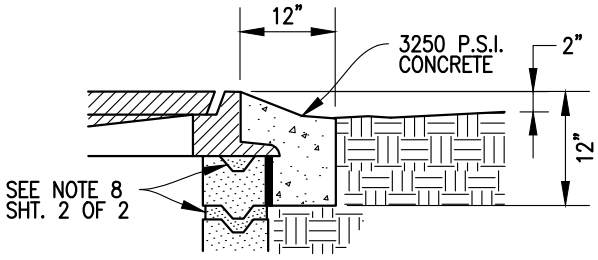

ROADWAY SHOULDER

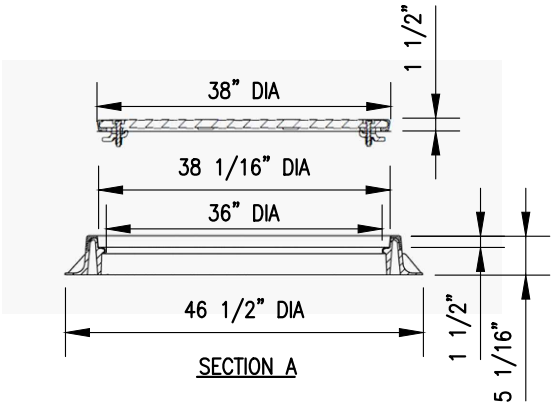

SECTION A

TYP. TOP VIEW COVER DETAIL FOR 36" MANHOLE

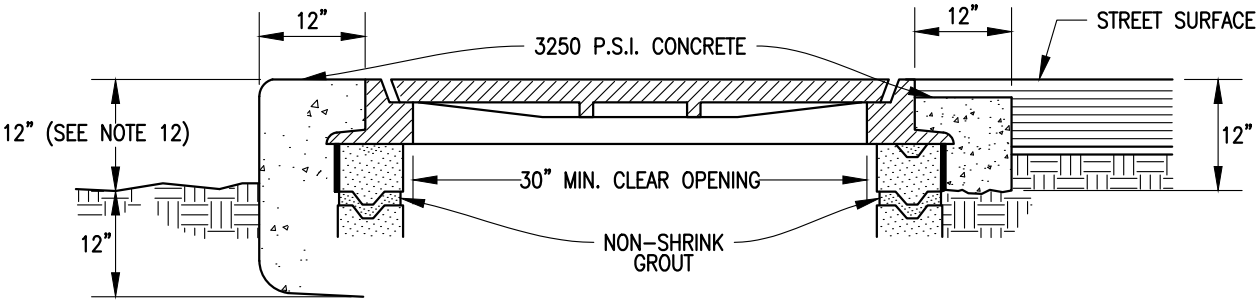

UNFINISHED SURFACE

SCALE: NOT TO SCALE

Inland Empire Utilities Agency
A MUNICIPAL WATER DISTRICT

APPROVED BY:
JASON MARSEILLES, P.E. — JULY 2025
MANAGER OF ENGINEERING — DATE

DESIGN BY: GHD, INC.
APPROVED BY:
CHRIS BARTLEMAN, P.E. — JULY 2025
C81075 — DATE

Inland Empire Utilities Agency

MANHOLE FRAME AND COVER

REVISION			
NO.	BY	DATE	APPROVED

C-MH-004

SHEET 1 OF 2

\\ghdnet\ghd\US\Irvine\Projects\111\11181240 IEUA On Call Engineering Serv\Phase 08 - IEUA Standard Details\4- Delivery Documents\1- CAD\Sheets\Civil Standard Details\C-MH-004.dwg Jun 16, 2025 - 12:03pm

NOTES:

1. MANHOLE FRAME AND COVER SHALL BE EJ WATER-RESISTANT BLACK COMPOSITE WITH GASKET AND "IEUA SEWER" CUSTOM CENTER INSERT.

2. MANHOLE FRAME AND COVER SHALL BE HEAVY DUTY TRAFFIC RATED, U.S. LOAD SPECIFICATION, MEETS H-25 TRAFFIC REQUIREMENTS.

3. (4) TITUS TWISTLIFT SECURITY LOCK SYSTEMS BOLT SHALL BE MACHINED FROM 17-4PH H900 HARDENED STAINLESS STEEL WITH TITUS 4-TWISTLIFT SECURITY LOCKS.

4. CONTRACTOR SHALL PROVIDE ONE (1) COMPOSITE COVER TWISTLIFT OPENING TOOL WITH LOCK SOCKET, 30" LONG AND POWDER COATED BLACK.

5. COVER SHALL BE FURNISHED WITH STAINLESS STEEL BOLTS WITH CAPTIVE WASHERS AND "T" STYLE GASKET. STAINLESS STEEL BOLTS WITH CAPTIVE WASHERS FROM INWESCO CO., AZUSA, CA (CAT. #85A84). "T" STYLE GASKET (R&D CO. #TG101) IS AVAILABLE FROM MAYDWELL & HARTZELL CO. LOS ANGELES, CA.

6. MANHOLE FRAME & COVER COLOR SHALL BE BLACK.

7. AREA AROUND PERIMETER ON BOTTOM SIDE OF COVER SHALL BE SMOOTH, FLAT, AND FREE OF ANY POCKETS OR IMPERFECTIONS.

8. THE MANHOLE FRAME SHALL BE SECURED TO THE GRADE RING WITH HIGH STRONG NON-SHRINK GROUT. AFTER THE FRAME IS SECURELY SET, THE FRAME AND THE COVER SHALL BE CLEANED AND SCRAPED FREE OF FOREIGN MATERIALS AND SHALL BE FLUSH WITH THE FRAME."

9. THE RELIEF DEPTH OF THE CAST LETTERS SHALL BE AT LEAST 3/16". TOP SURFACE OF THE LETTERS AND TOP FINISH SHALL BE FLUSH WITH THE OUTER RING EDGE AND THE FRAME TOP SURFACES.

10. PRECAST SECTIONS SHALL BE ASSEMBLED SUCH THAT THE MANHOLE COVER IS FLUSH WITH THE PAVING SURFACE.

11. THE CONTRACTOR SHALL REPLACE THE COVER AT THEIR OWN EXPENSE IF CRACKS DEVELOP, REGARDLESS OF SIZE, THAT RUN FROM ONE EDGE TO ANOTHER EDGE OR TO THE MANHOLE OPENING.

12. IF WITHIN A PLANTER, 12" DIMENSION CAN BE REDUCED TO 6".

13. CONCRETE COLLAR SHALL BE HIGH EARLY STRENGTH CONCRETE 3250 PSI MINIMUM. COLOR CONCRETE PER GOVERNING AGENCY STANDARD.

14. FOR NEW CONSTRUCTION MANHOLE FRAME AND COVER SHALL BE DETERMINED BY THE ABILITY TO INSTALL AN EXTENSION LADDER TO THE SHELF WITH SUFFICIENT CLEARANCE FOR ENTRANCE

SCALE: NOT TO SCALE

Inland Empire Utilities Agency
A MUNICIPAL WATER DISTRICT

APPROVED BY:
JASON MARSEILLES, P.E. — JULY 2025
MANAGER OF ENGINEERING — DATE

DESIGN BY: GHD, INC.
APPROVED BY:
CHRIS BARTLEMAN, P.E. — JULY 2025
C81075 — DATE

Inland Empire Utilities Agency

MAHOLE
FRAME AND COVER

REVISION			
NO.	BY	DATE	APPROVED

MANHOLE

SHEET 2 OF 2

\\ghdnet\ghd\US\Irvine\Projects\111\11181240 IEUA On Call Engineering Serv\Phase 08 - IEUA Standard Details\4- Delivery Documents\1- CAD\Sheets\Civil Standard Details\C-MH-004.dwg Jun 16, 2025 - 12:03pm

MANHOLE DIMENSIONAL DATA		
MANHOLE DIAMETER	TYPE	MAX PIPE OUTSIDE DIAMETER
48"	PRECAST CONCRETE	22"
60"	PRECAST CONCRETE	32"
72"	PRECAST CONCRETE	38"
84"	PRECAST CONCRETE	44"
96"	PRECAST CONCRETE	50"

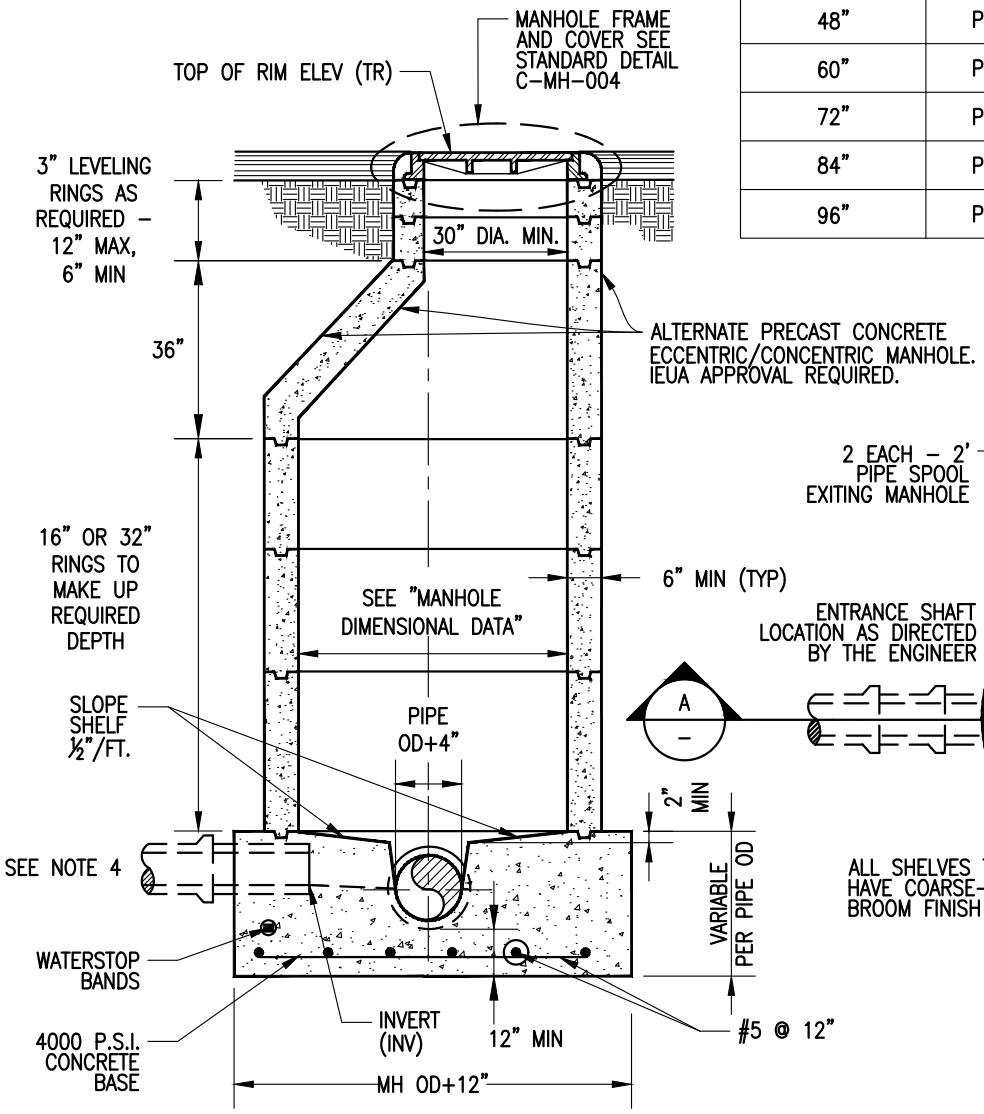

SECTION A–A

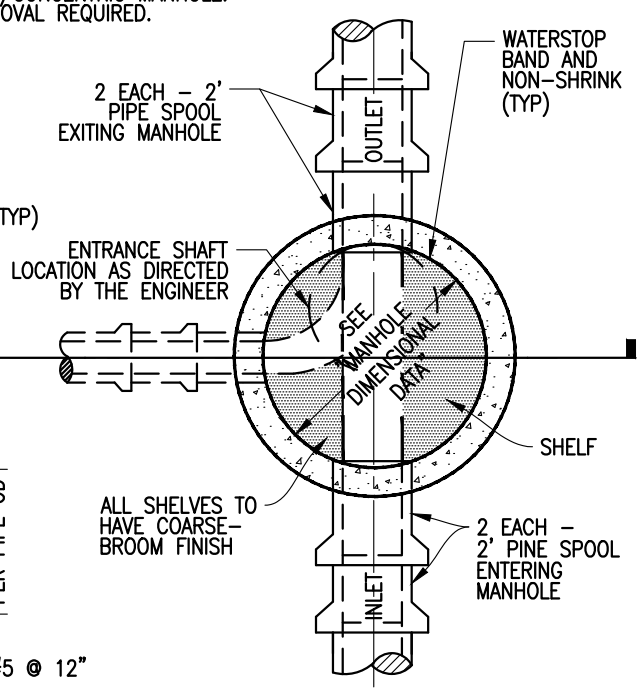

PLAN

NOTES:

1. PRECAST MANHOLE SHALL CONFORM TO THE REQUIREMENTS OF AASHTO MINIMUM H–20 LOADING, OR AS DIRECTED BY IEUA.
2. MATERIALS, EMBEDMENT, PLACEMENT, AND COMPACTION OF GRANULAR EMBEDMENT AND COMPACTED BACKFILL WILL CONFORM TO THE AGENCY'S STANDARD SPECIFICATIONS FOR PIPE BEDDING AND TRENCH BACKFILL.
3. LINE INTERIOR SURFACES OF MANHOLE AND MANHOLE BASE WITH POLYURETHANE (RAVEN 405 OR APPROVED EQUAL). APPLY NON–SKID SURFACE ON TOTAL SHELF AREA.
4. SOFFIT OF INCOMING PIPE SHALL MATCH OUTLET PIPE SOFFIT.
5. IEUA APPROVAL REQUIRED PRIOR TO CONNECTING AT MANHOLE.

SCALE: NOT TO SCALE

Inland Empire Utilities Agency
A MUNICIPAL WATER DISTRICT

APPROVED BY:
JASON MARSEILLES, P.E. — JULY 2025
MANAGER OF ENGINEERING — DATE

DESIGN BY: GHD, INC.
APPROVED BY:
CHRIS BARTLEMAN, P.E. — JULY 2025
C81075 — DATE

Inland Empire Utilities Agency

TYPICAL SEWER MANHOLE DETAIL

REVISION			
NO.	BY	DATE	APPROVED

C-MH-001

SHEET 1 OF 1

\\ghdnet\ghd\US\Irvine\Projects\111\11181240 IEUA On Call Engineering Serv\Phase 08 – IEUA Standard Details\4– Delivery Documents\1– CAD\Sheets\Civil Standard Details\C-MH-001.dwg Jun 16, 2025 – 12:06pm

NOTES:

1. MANHOLE SHALL BE 60-INCH MINIMUM DIAMETER.
2. ENGINEER SHALL VERIFY THAT ACCESS WAY IS SIZED SUFFICIENTLY FOR IEUA CAMERA EQUIPMENT.
3. BOLTS SHALL BE HEX HEAD BOLTS. NUTS SHALL BE HEAVY HEX NUTS. MINIMUM YIELD STRENGTH SHALL BE 55,000 PSI PER 2021 PPI TN-38.
4. GASKETS SHALL BE COMPRESSED FIBER OR PTFE. GASKETS SHALL NOT BE REUSED.
5. IF THREADED STUDS ARE USED, WASHERS AND NUTS SHALL BE INSTALLED ON BOTH SIDES.

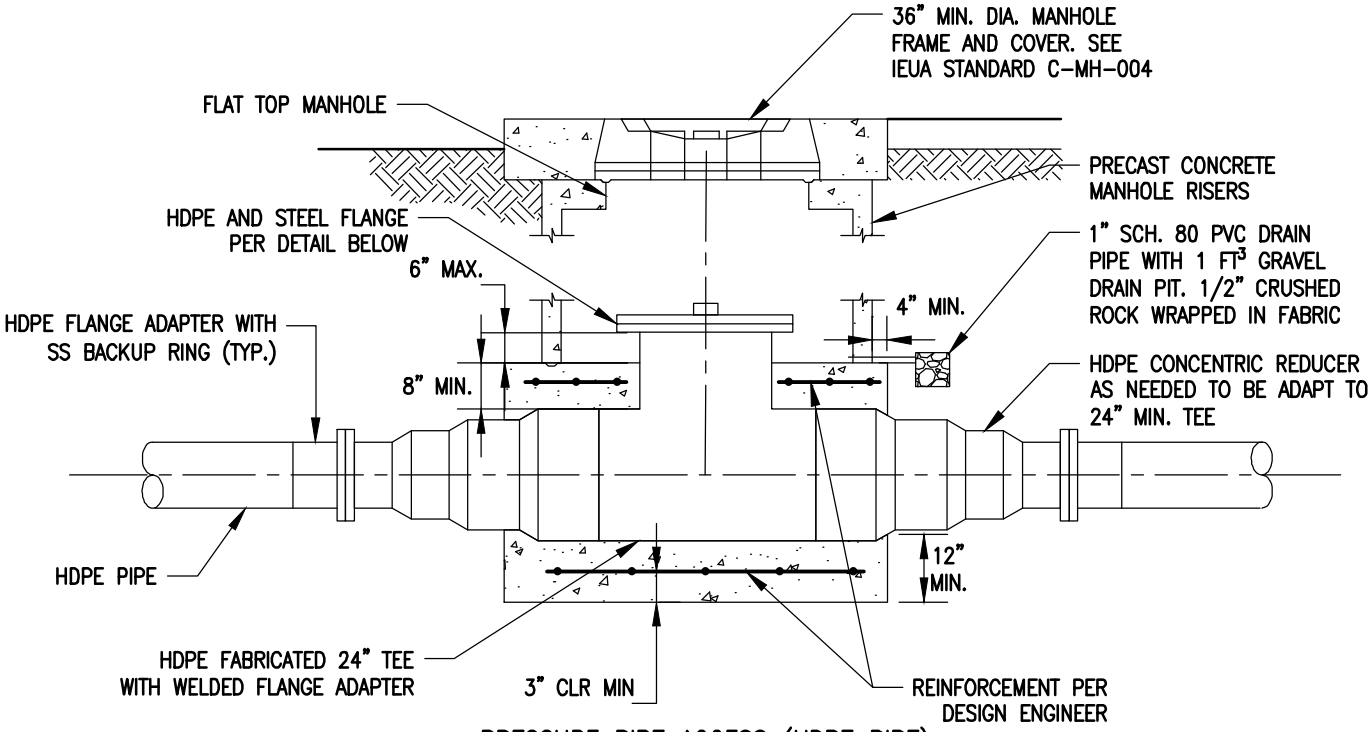

PRESSURE PIPE ACCESS (HDPE PIPE)

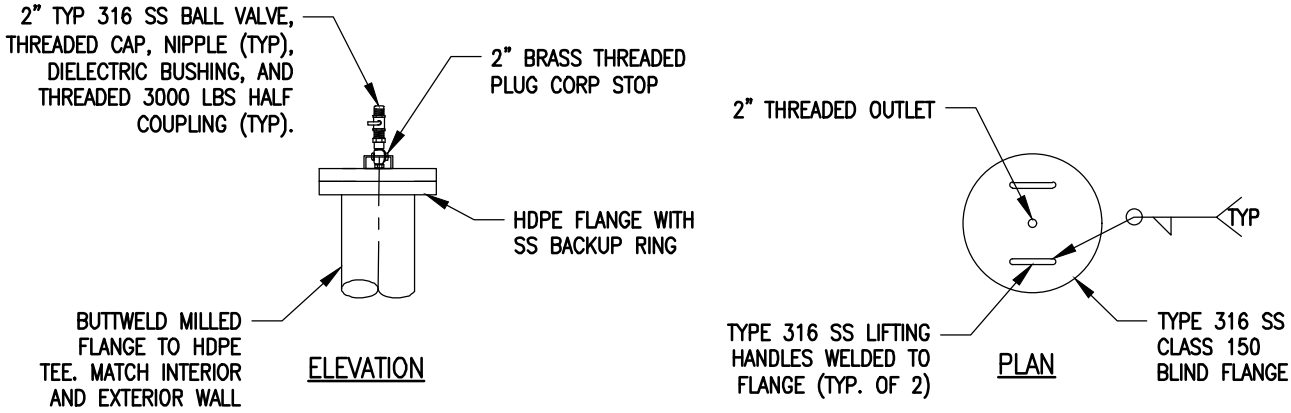

BLIND FLANGE

SCALE: NOT TO SCALE

Inland Empire Utilities Agency
A MUNICIPAL WATER DISTRICT

APPROVED BY:
JASON MARSEILLES, P.E. — JULY 2025
MANAGER OF ENGINEERING — DATE

DESIGN BY: GHD, INC.
APPROVED BY:
CHRIS BARTLEMAN, P.E. — JULY 2025
C81075 — DATE

Inland Empire Utilities Agency

PRESSURE PIPE MAINTENANCE HOLE DETAIL

REVISION			
NO.	BY	DATE	APPROVED

C-MH-002

SHEET 1 OF 1

\\ghdnet\ghd\US\Irvine\Projects\111\11181240 ieua on call engineering serv\phase 08 - ieua standard details\4- delivery documents\1- CAD\Sheets\Civil Standard Details\C-MH-002 Pressure Pipe Maintenance Hole Detail.dwg May 30, 2025 - 3:30pm

NOTES:

1. CASING SHALL BE A MINIMUM OF 4 INCHES GREATER THAN THE BELL DIAMETER.
2. SIZE AND THICKNESS OF CASING SHALL BE SHOWN IN SCHEDULE. FOR LONG BORES OR SPECIAL SITUATION GREATER WALL THICKNESS THAN SHOWN IN SCHEDULE MAY BE REQUIRED.
3. WELD FULL-CIRCUMFERENCE ALL STEEL CASING PIPE FIELD JOINTS.
4. PRESSURE TEST CARRIER PIPE PRIOR TO FILLING CASING.
5. SEAL EACH END OF CASING WITH CASING END SEALS.
6. BACKFILL CASING IN OPEN CUT PER DWG. C-EW-001.
7. NUMBER AND PLACEMENT OF SPACER ON CARRIER PIPE PER MANUFACTURER'S SPECIFICATIONS.
8. INSTALLATION OF 30-INCH DIAMETER OR LARGER CASING BY BORE, JACK AND/OR TUNNEL METHOD REQUIRES A TUNNEL CLASSIFICATION FROM THE CALIFORNIA DIVISION OF OCCUPATIONAL SAFETY AND HEALTH, MINING AND TUNNELING UNIT.
9. ANNULAR BACKFILL MATERIAL MAY BE SUPERSEDED BY JURISDICTIONAL REQUIREMENTS.
10. FLEXIBLE PIPE (PVC, HDPE, ETC.) SHALL HAVE SPACER GUIDE ALONG ON THE TOP TO PREVENT PIPE FROM FLOATING. PIPE WITHIN CASING TO BE BONDED TOGETHER AT THE JOINTS FOR AN INTEGRAL UNIT PER MANUFACTURER'S RECOMMENDATIONS. TWO (2) APPROVED FLEXIBLE COUPLINGS SHALL BE USED AT EACH END OF CASING.

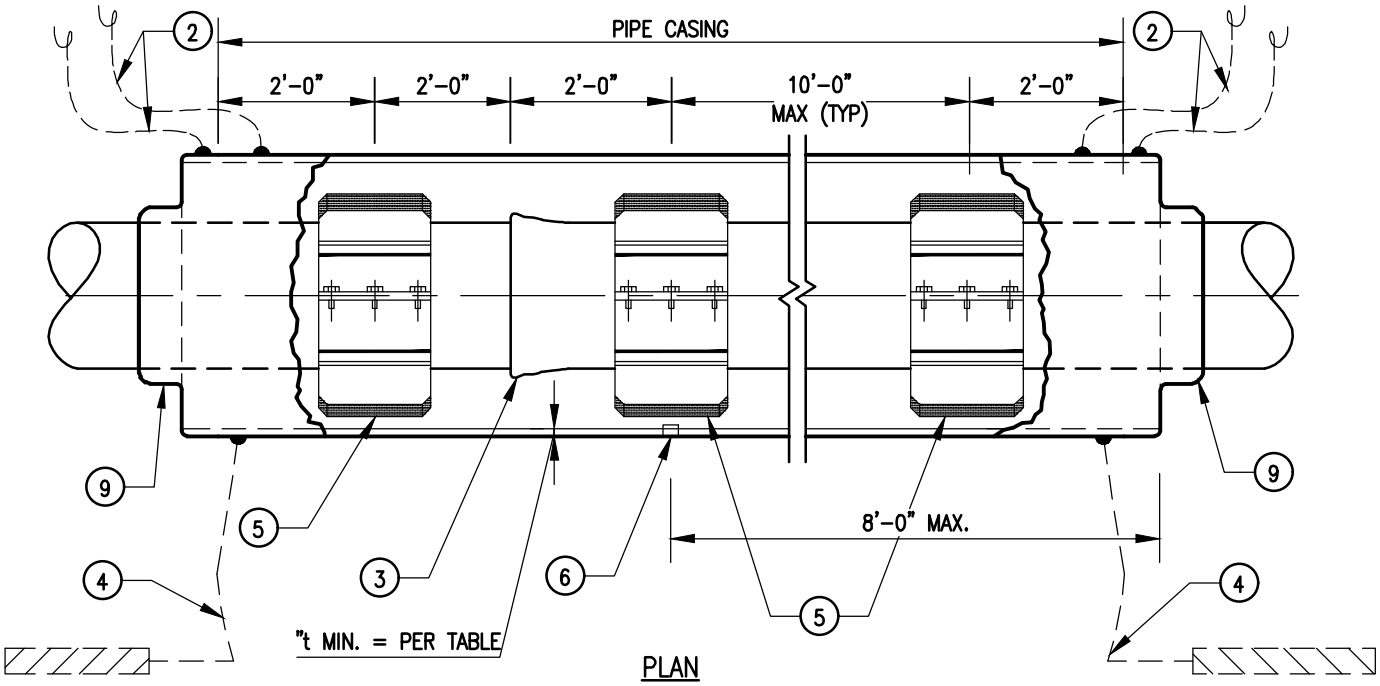

PLAN

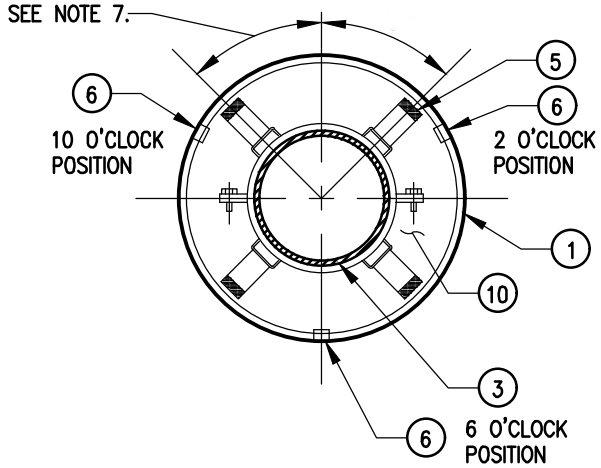

CROSS-SECTION

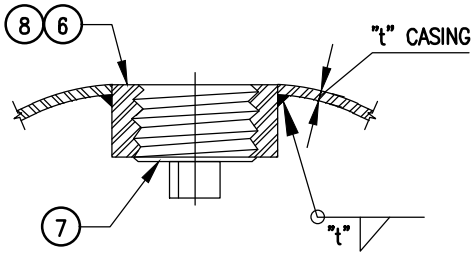

GROUT FITTING DETAIL

SCALE: NOT TO SCALE

Inland Empire Utilities Agency
A MUNICIPAL WATER DISTRICT

APPROVED BY:
JASON MARSEILLES, P.E. — JULY 2025
MANAGER OF ENGINEERING — DATE

DESIGN BY: GHD, INC.
APPROVED BY:
CHRIS BARTLEMAN, P.E. — JULY 2025
C81075 — DATE

Inland Empire Utilities Agency

CASING FOR PIPELINES DETAIL

REVISION			
NO.	BY	DATE	APPROVED

C-PC-002

SHEET 1 OF 2

\\ghdnet\ghd\US\Irvine\Projects\111\11181240 ieua on call engineering serv\phase 08 - ieua standard details\4- delivery documents\1- CAD\Sheets\Civil Standard Details\C-PC-002 Casing for Pipelines.dwg May 30, 2025 - 3:31pm

TABLE "A"			
CASING O.D. "D"	STREETS & HWYS THICHNESS "t" MIN		RAILROADS
DIAMETER (INCHES)	UP TO 150' LENGTH	OVER 150' LENGTH	STEEL THICKNESS "t" (MINIMUM)
4"–10" ID	1/4"	1/4"	4"–12" : 1/4"
12"–16" OD	1/4"	1/4"	14"–16" : 9/32"
18"–20" OD	1/4"	1/4"	18" : 5/16" 20" : 11/32"
22" OD	1/4"	1/4"	3/8"
24" OD	1/4"	1/4"	13/32"
26" OD	1/4"	1/4"	7/16"
28" OD	1/4"	1/4"	15/32"
30" OD	3/8"	1/2"	15/32"
32" OD	3/8"	1/2"	1/2"
34"–36" OD	3/8"	1/2"	17/32"
38" OD	3/8"	1/2"	9/16"
40" OD	1/2"	3/4"	9/16"
42" OD	1/2"	3/4"	9/16"
48"–60" OD	1/2"	3/4"	AS REQUIRED
62"–72" OD	3/4"	3/4"	AS REQUIRED

MATERIAL LIST FOR STEEL CASING	
ITEM	DESCRIPTION
1	STEEL CASING.
2	INSTALL CASING TEST STATION PER CM–TS–001.
3	CARRIER PIPE CENTERED IN CASING WITH ALL JOINTS RESTRAINED.
4	INSTALL 60 LB. ANODE.
5	STAINLESS STEEL CASING SPACERS WITH HEAVY–DUTY 2–INCH WIDE ANTI–FRICTION RUNNERS.
6	GROUT FITTING @ 8–FOOT O.C. PER DETAIL HEREON. FOR ALL CASINGS 24–INCH IN DIAMETER AND LARGER, INSTALL ONE COUPLING IN 6 O'CLOCK POSITION @ 8–FOOT O.C.; STAGGER COUPLINGS BETWEEN 10 O'CLOCK AND 2 O'CLOCK POSITIONS EVERY 4 LINEAR FEET ALONG CASING AXIS.
7	2–INCH NPT THREADED STEEL PLUG WITH RAISED HEAD.
8	2–INCH NPT. STD. WT. STL. PIPE HALF COUPLING.
9	EDPM CASING END SEAL. INSTALL WITH STAINLESS STEEL WORM–SCREW BAND CLAMPS.
10	BACKFILL ANNULAR SPACE PER JURISDICTIONAL REQUIREMENTS AND PROJECT SPECIFICATIONS.

SCALE: NOT TO SCALE

Inland Empire Utilities Agency
A MUNICIPAL WATER DISTRICT

APPROVED BY:
JASON MARSEILLES, P.E. — JULY 2025
MANAGER OF ENGINEERING — DATE

DESIGN BY: GHD, INC.
APPROVED BY:
CHRIS BARTLEMAN, P.E. — JULY 2025
C81075 — DATE

Inland Empire Utilities Agency

CASING FOR PIPELINES DETAIL

REVISION			
NO.	BY	DATE	APPROVED

C-PC-002

SHEET 2 OF 2

\\ghdnet\ghd\US\Irvine\Projects\111\11181240 ieua on call engineering serv\phase 08 – ieua standard details\4– delivery documents\1– CAD\Sheets\Civil Standard Details\C–PC–002 Casing for Pipelines.dwg May 30, 2025 – 3:31pm

NOTES:

1. PROVIDE VALVE STEM EXTENSION IF DEPTH TO VALVE NUT EXCEEDS 4 FEET.
2. VALVE BOX AND COVER SHALL BE MARKED "IEUA SEWER".
3. ALL BURIED BOLTS SHALL BE TYPE 316 STAINLESS STEEL.
4. HDPE SHALL BE DR 9 MINIMUM DUCTILE IRON PIPE SIZE.
5. RESTORE CURB, GUTTER, SIDEWALK AND CURB RAMPS PER CONTRACT DOCUMENTS.
6. FOR AIR RELEASE & VACUUM VALVES LOCATED IN UNPAVED AREAS, CONSTRUCT PROTECTION POSTS AROUND THE VALVE ENCLOSURE.
7. NUTS, BOLTS, DUCTILE IRON PIPE, FLANGES, VALVES, FITTINGS, AND COUPLINGS SHALL BE WRAPPED WITH WAX TAPE (TRENTON #1 OR EQUAL) AND POLYETHYLENE ENCASEMENT (TWO LAYERS OF 8-MIL THICK POLYETHYLENE).
8. ADJACENT AIR VALVE TO BE OFFSET BY 5 FEET MINIMUM.
9. 4" SIZE SHOWN. THIS STANDARD DETAIL IS SUITABLE FOR 3" OR 4" ASSEMBLY. DESIGN ENGINEER IS REQUIRED TO SIZE AIR VALVE.
10. SUITABLE FOR PIPELINES UP TO 30". MODEL AND SIZE OF AIR VAC SHALL BE CONFIRMED WITH PROJECT REQUIREMENTS FOR SURGE AND POTENTIAL FOR REPTURE.
11. SEE PLAN VIEW STANDARD DRAWING RW-AV-001 FOR BOLLARD PLACEMENT.
12. PIPE SHALL BE INSTALLED UNDER EXISTING POTABLE WATER PIPELINES WITH MINIMUM 1 FT CLEARANCE.

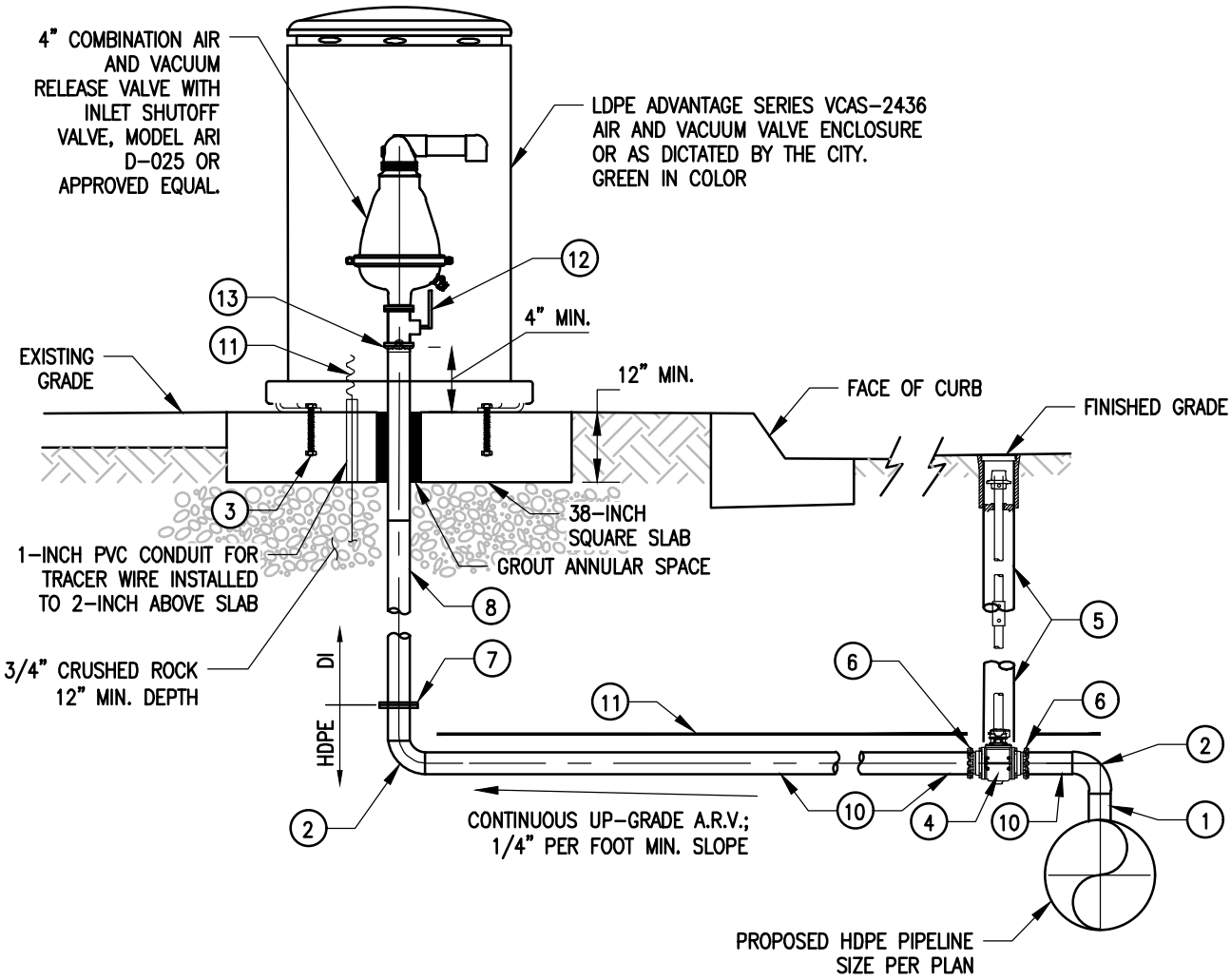

SCALE: NOT TO SCALE

Inland Empire Utilities Agency
A MUNICIPAL WATER DISTRICT

APPROVED BY:

JASON MARSEILLES, P.E. — JULY 2025
MANAGER OF ENGINEERING — DATE

DESIGN BY: GHD, INC.

APPROVED BY:
CHRIS BARTLEMAN, P.E. — JULY 2025
C81075 — DATE

Inland Empire Utilities Agency

3" AND 4" SEWER FORCE MAIN COMBINATION AIR VACUUM VALVE

REVISION			
NO.	BY	DATE	APPROVED

SS-AR-001

SHEET 1 OF 2

\\ghdnet\ghd\US\Irvine\Projects\111\11181240 ieua on call engineering serv\phase 08 - ieua standard details\4- delivery documents\1- CAD\Sheets\Sewer Line Details\SS-AR-001 3-in and 4-in Sewer Forcemain Combination Air Vacuum Valve.dwg May 30, 2025 - 3:31pm

MATERIAL LIST FOR COMBINATION AIR VACUUM VALVE	
ITEM	DESCRIPTION
1	ELECTROFUSION BRANCH SADDLE WITH OUTLET
2	HDPE 90° ELBOW
3	1/2" SST BOLT AND WASHER, 4" MINIMUM EMBEDMENT, TYP OF 3
4	FLANGED PLUG VALVE WITH 2" SQ. OPERATING NUT
5	STANDARD VALVE BOX INSTALLATION PER STANDARD DRAWING RW-VB-001. AMEND COVER STENCILING PER NOTE 2.
6	RESTRAINED FLANGE COUPLING ADAPTER, EBAA IRON SERIES 2100 OR EQUAL WITH PIPE STIFFENERS
7	BUTT FUSION FLANGE ADAPTER WITH DI BACKING RING
8	DI SPOOL, PE X FLG; LENGTH AS REQUIRED
9	COMBINATION AIR AND VACUUM RELEASE VALVE, MODEL ARI D-025 OR APPROVED EQUAL.
10	HDPE PIPE; LENGTH AS REQUIRED
11	WARNING TAPE AND TRACER WIRE PER SPECIFICATIONS
12	FLANGED PLUG VALVE WITH HANDEL
13	FLANGE ADAPTER, EBAA IRON SERIES 1000 OR EQUAL WITH PIPE STIFFENERS

SCALE: NOT TO SCALE

Inland Empire Utilities Agency
A MUNICIPAL WATER DISTRICT

APPROVED BY:
JASON MARSEILLES, P.E. — JULY 2025
MANAGER OF ENGINEERING — DATE

DESIGN BY: GHD, INC.
APPROVED BY:
CHRIS BARTLEMAN, P.E. — JULY 2025
C81075 — DATE

Inland Empire Utilities Agency

3" AND 4" SEWER FORCE MAIN COMBINATION AIR VACUUM VALVE

REVISION			
NO.	BY	DATE	APPROVED

SS-AR-001

SHEET 2 OF 2

\\ghdnet\ghd\US\Irvine\Projects\111\11181240 ieua on call engineering serv\phase 08 - ieua standard details\4- delivery documents\1- CAD\Sheets\Sewer Line Details\SS-AR-001 3-in and 4-in Sewer Forcemain Combination Air Vacuum Valve.dwg May 30, 2025 - 3:31pm

NOTES:

1. MANUFACTURER: AMERISTAR OR APPROVED EQUAL
2. MAKE: PASSPORT IS GAUNTLET HIGH SECURITY SLIDING GATE AND IMPASSE II GAUNTLET FENCE.
3. STRUCTURAL CALCULATIONS SHALL BE SIGNED AND STAMPED BY A STRUCTURAL ENGINEER LICENSED IN CALIFORNIA.
4. REINFORCING OF CONCRETE TO BE DETERMINED BY A STRUCTURAL ENGINEER LICENSED IN CALIFORNIA.
5. DESIGN ENGINEER SHALL PROVIDE A TURNING ANALYSIS TO CONFIRM 20' WIDE GATE IS SUFFICIENT FOR SITE ACCESS.
6. DETAIL APPLIES TO BOTH MOTORIZED OR MANUAL GATE OPERATORS.
7. CONCRETE FOOTING SHALL BE 2500 PSI MIN. @ 28 DAYS, FOOTINGS TO DRAIN AWAY FROM POST.
8. REFER TO PROJECT SPECIFICATIONS FOR ADDITIONAL DETAIL.
9. COORDINATE WITH FACILITIES/IT FOR ACCESS CONTROL. COORDINATE WITH FIRE JURISDICTION FOR APPROVAL.

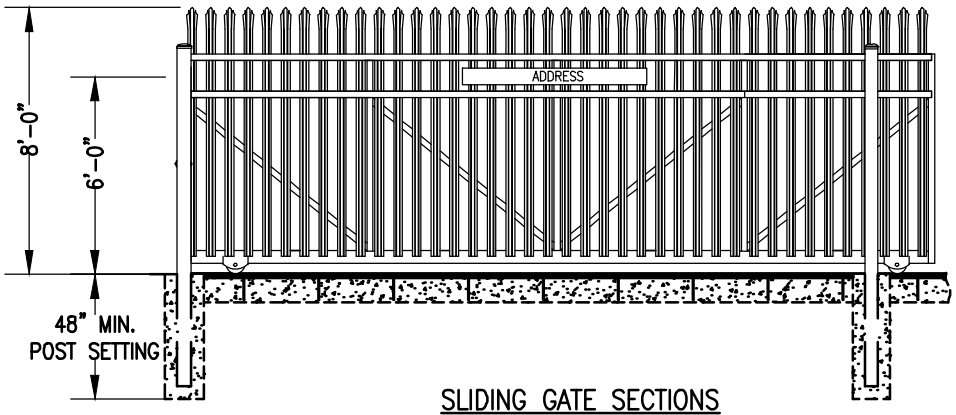

SLIDING GATE SECTIONS

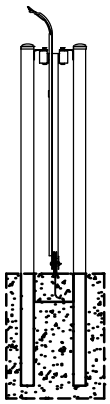

SECTION

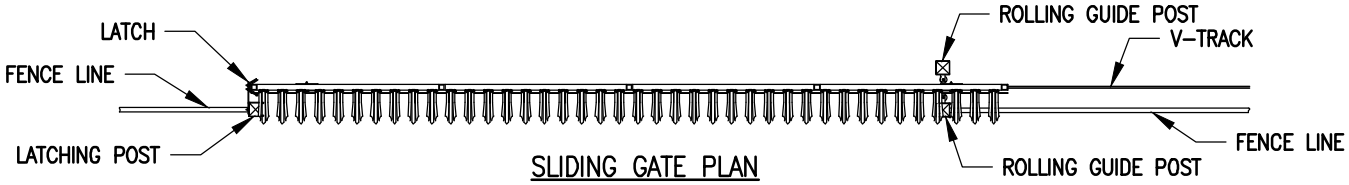

SLIDING GATE PLAN

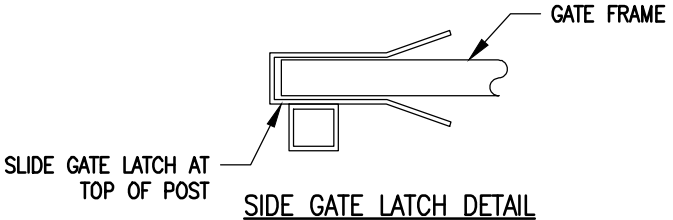

SIDE GATE LATCH DETAIL

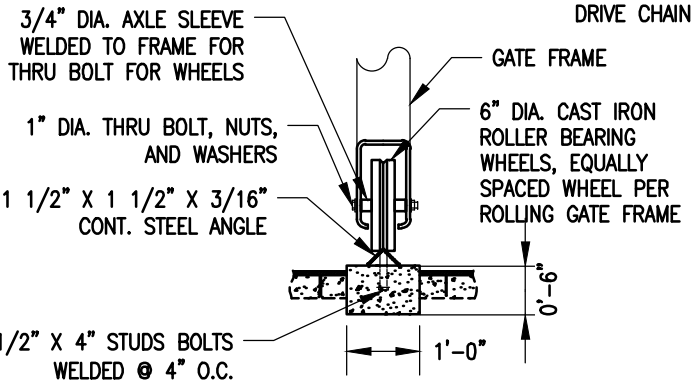

WHEEL AND ANGLE DETAIL

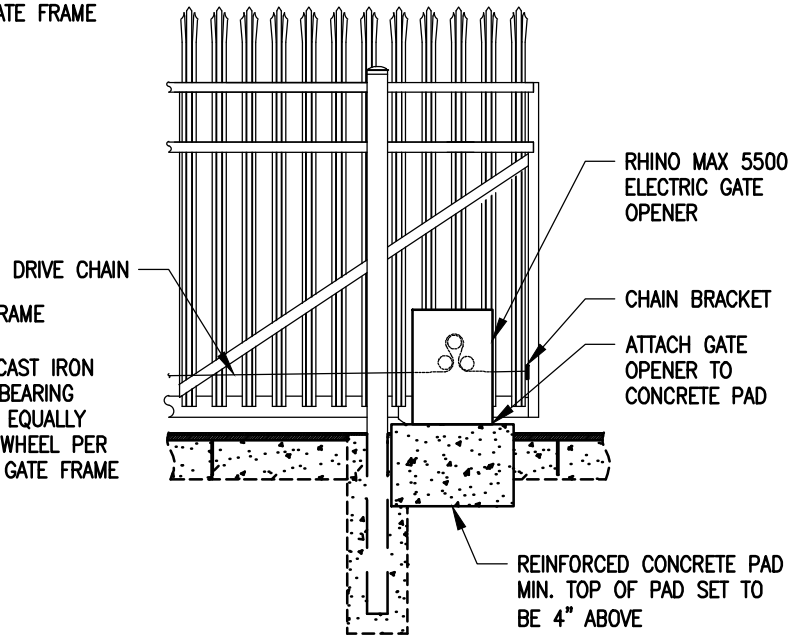

MOTORIZED GATE OPENER

SCALE: NOT TO SCALE

Inland Empire Utilities Agency
A MUNICIPAL WATER DISTRICT

APPROVED BY:

JASON MARSEILLES, P.E. — JULY 2025
MANAGER OF ENGINEERING — DATE

DESIGN BY: GHD, INC.

APPROVED BY:
CHRIS BARTLEMAN, P.E. — JULY 2025
C81075 — DATE

Inland Empire Utilities Agency

TUBULAR STEEL FENCE & ROLLING AND SWING GATE DETAIL

REVISION			
NO.	BY	DATE	APPROVED

C-EW-009

SHEET 1 OF 3

\\ghdnet\ghd\US\Irvine\Projects\111\11181240 ieua on call engineering serv\phase 08 - ieua standard details\4- delivery documents\1- CAD\Sheets\Civil Standard Details\C-EW-009 Tubular Steel Fence & Rolling and Swing Gate.dwg May 30, 2025 - 3:32pm

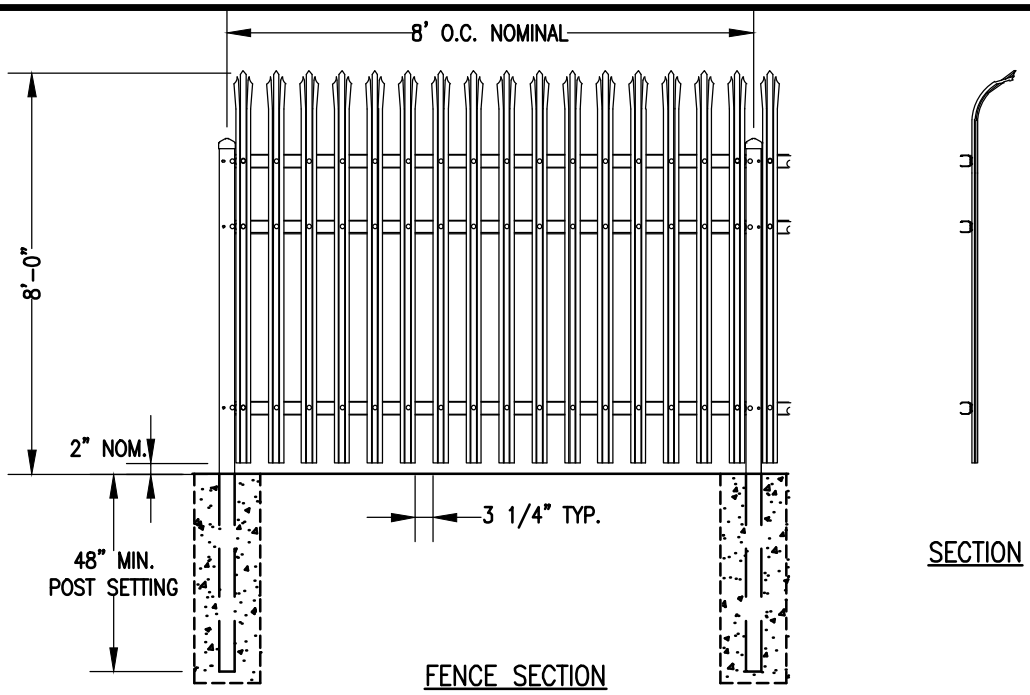

FENCE SECTION

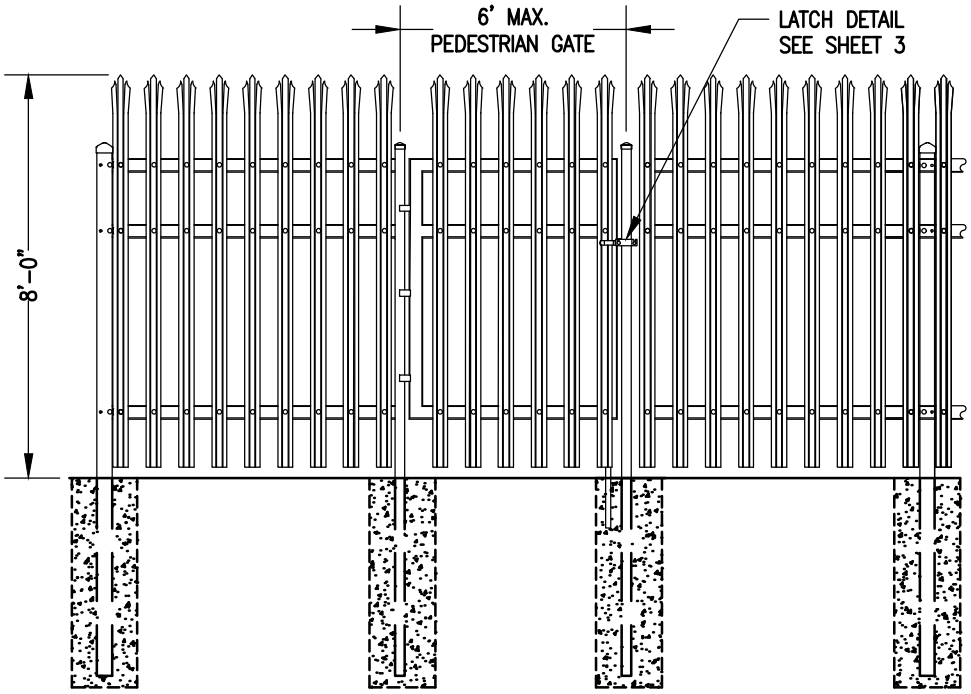

PEDESTRIAN GATE

SCALE: NOT TO SCALE

Inland Empire Utilities Agency
A MUNICIPAL WATER DISTRICT

APPROVED BY:

JASON MARSEILLES, P.E. — JULY 2025
MANAGER OF ENGINEERING — DATE

DESIGN BY: GHD, INC.

APPROVED BY:
CHRIS BARTLEMAN, P.E. — JULY 2025
C81075 — DATE

Inland Empire Utilities Agency

TUBULAR STEEL FENCE & ROLLING AND SWING GATE DETAIL

REVISION			
NO.	BY	DATE	APPROVED

C-EW-009

SHEET 2 OF 3

\\ghdnet\ghd\US\Irvine\Projects\111\11181240 ieua on call engineering serv\phase 08 - ieua standard details\4- delivery documents\1- CAD\Sheets\Civil Standard Details\C-EW-009 Tubular Steel Fence & Rolling and Swing Gate.dwg May 30, 2025 - 3:32pm

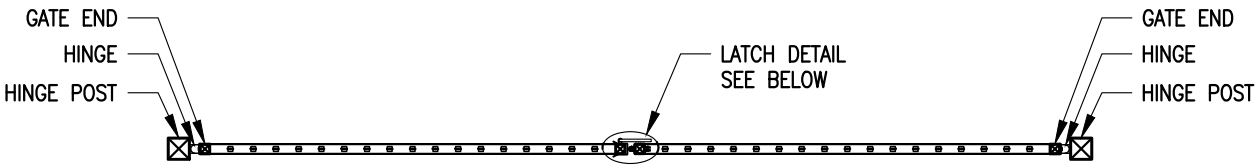

SWING GATE PLAN

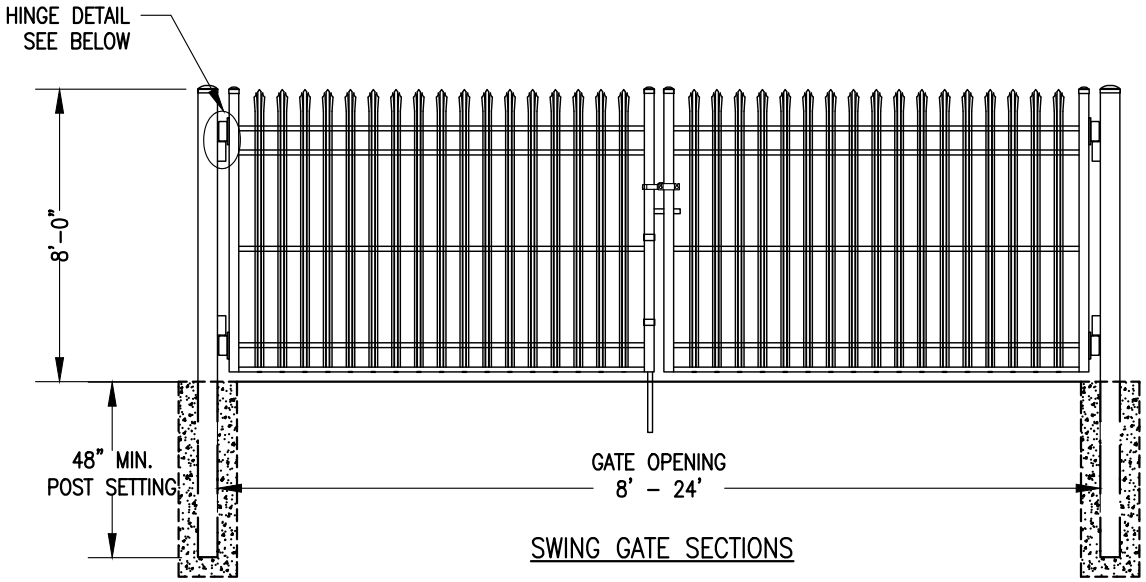

SWING GATE SECTIONS

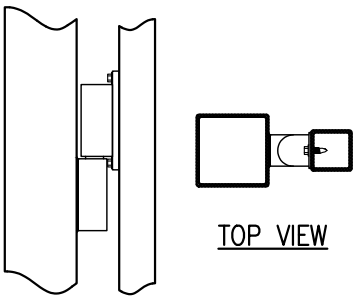

TOP VIEW

FRONT VIEW

HINGE DETAIL

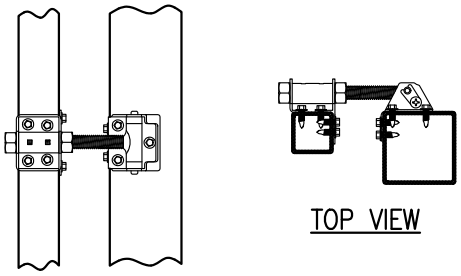

TOP VIEW

FRONT VIEW

LATCH DETAIL

SCALE: NOT TO SCALE

Inland Empire Utilities Agency
A MUNICIPAL WATER DISTRICT

APPROVED BY:

JASON MARSEILLES, P.E. — JULY 2025
MANAGER OF ENGINEERING — DATE

DESIGN BY: GHD, INC.

APPROVED BY:
CHRIS BARTLEMAN, P.E. — JULY 2025
C81075 — DATE

Inland Empire Utilities Agency

TUBULAR STEEL FENCE & ROLLING AND SWING GATE DETAIL

REVISION

NO.	BY	DATE	APPROVED

C-EW-009

SHEET 3 OF 3

\\ghdnet\ghd\US\Irvine\Projects\111\11181240 IEUA On Call Engineering Serv\Phase 08 – IEUA Standard Details\4– Delivery Documents\1– CAD\Sheets\Civil Standard Details\C-EW-009 Tubular Steel Fence & Rolling and Swing Gate.dwg May 30, 2025 – 3:41pm

NOTES:

1. WIRES SHALL BE WELDED TO TOP (HORIZONTAL) SURFACE OF PIPE.
2. ALL TEST LEADS ARE CONTAINED IN 1 INCH SCHEDULE 40 PVC PIPE.

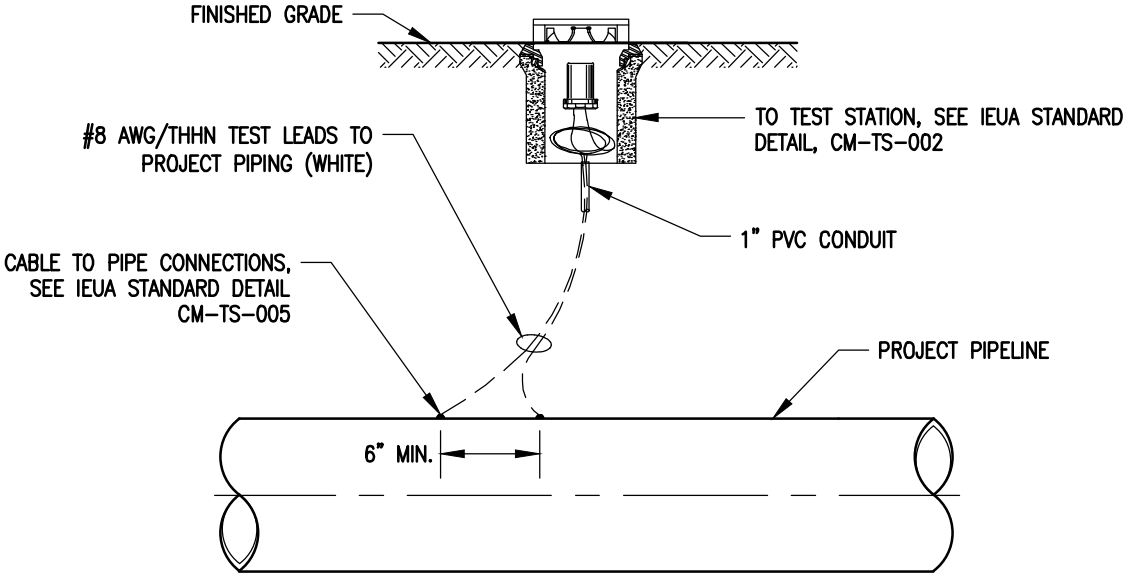

MONITORING TEST STATION DETAIL

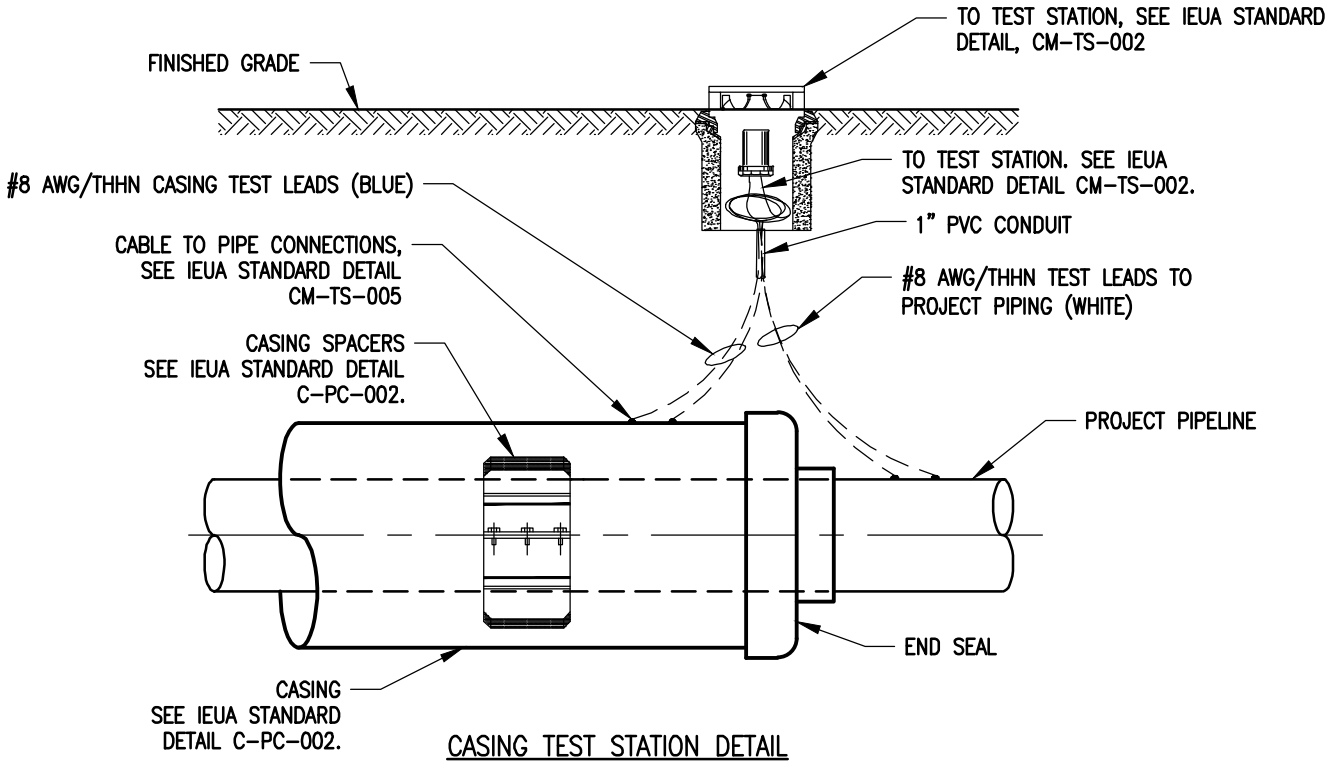

CASING TEST STATION DETAIL

SCALE: NOT TO SCALE

Inland Empire Utilities Agency
A MUNICIPAL WATER DISTRICT

APPROVED BY:
JASON MARSEILLES, P.E. — JULY 2025
MANAGER OF ENGINEERING — DATE

DESIGN BY: GHD, INC.
APPROVED BY:
CHRIS BARTLEMAN, P.E. — JULY 2025
C81075 — DATE

Inland Empire Utilities Agency

TEST STATION DETAILS

REVISION			
NO.	BY	DATE	APPROVED

CM-TS-001

SHEET 1 OF 2

\\ghdnet\ghd\US\Irvine\Projects\111\11181240 ieua on call engineering serv\phase 08 - ieua standard details\4- delivery documents\1- CAD\Sheets\Cathodic Protection Details\CM-TS-001 Test Station Details.dwg May 30, 2025 - 3:32pm

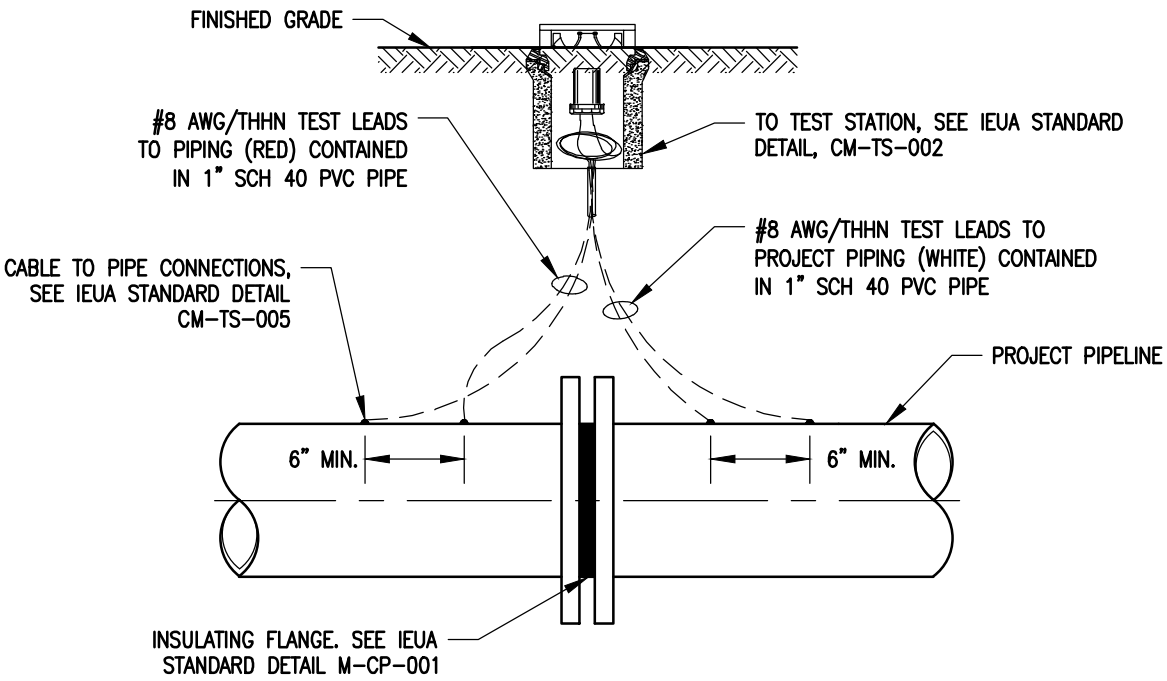

INSULATING TEST STATION DETAIL

SCALE: NOT TO SCALE

Inland Empire Utilities Agency
A MUNICIPAL WATER DISTRICT

APPROVED BY:

JASON MARSEILLES, P.E. — JULY 2025
MANAGER OF ENGINEERING — DATE

DESIGN BY: GHD, INC.

APPROVED BY:
CHRIS BARTLEMAN, P.E. — JULY 2025
C81075 — DATE

Inland Empire Utilities Agency

TEST STATION DETAILS

REVISION			
NO.	BY	DATE	APPROVED

CM-TS-001

SHEET 2 OF 2

\\ghdnet\ghd\US\Irvine\Projects\111\11181240 ieua on call engineering serv\phase 08 - ieua standard details\4- delivery documents\1- CAD\Sheets\Cathodic Protection Details\CM-TS-001 Test Station Details.dwg May 30, 2025 - 3:32pm

NOTES:

1. FOR TEST STATIONS INSTALLED CROSS COUNTRY OR IN UNPAVED AREAS, A UTILITY MARKER SHALL BE INSTALLED ADJACENT TO TEST STATION AND APPURTENANCES.
2. FOR TEST STATION LOCATION, REFER TO SHEET 2.
3. INSTALL REINFORCED CONCRETE AROUND BOX WHEN IN PARKWAY.
4. MINIMUM OF 18" SLACK IN CABLES SHALL BE PROVIDED TO ALLOW REMOVAL OR TERMINAL BOX.
5. SEAL THE END OF THE LOWER PIECE OF THE TERMINAL BOX WITH SEALING PUTTY.
6. INSTALL TAG WITH PIPELINE STATION AND TERMINAL BOARD ID

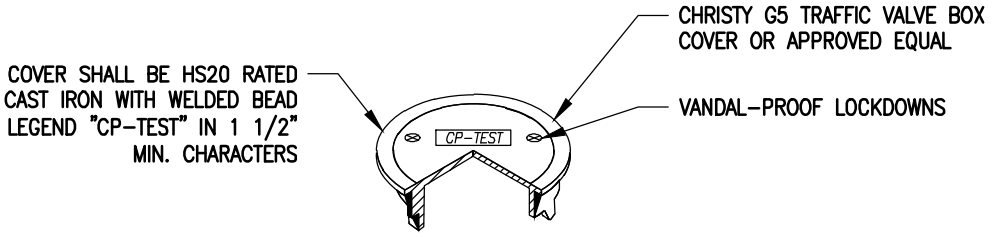

CONCRETE TEST BOX LID

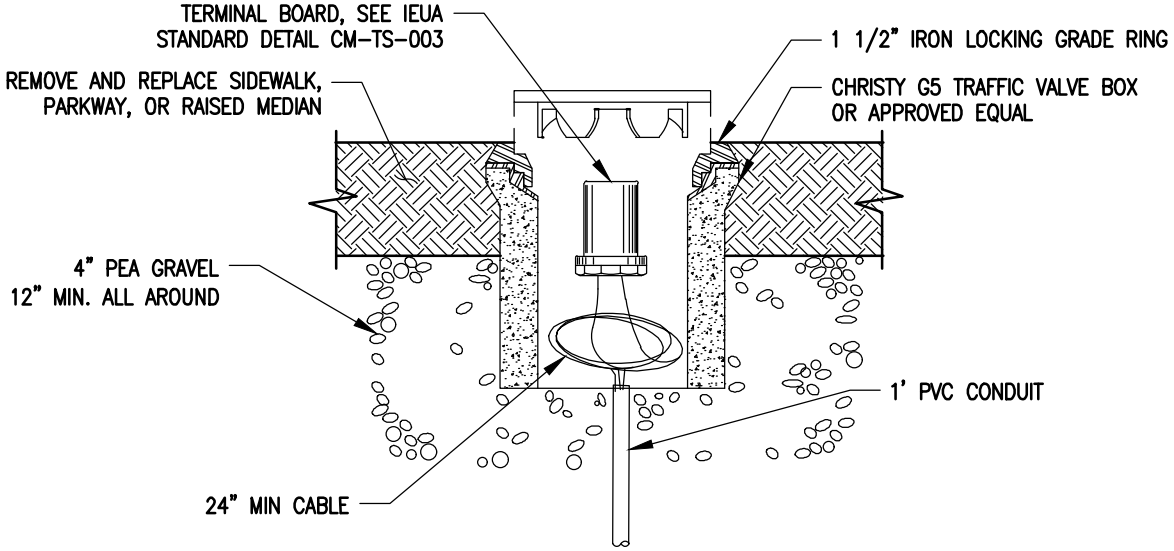

FLUSH MOUNTED TEST STATION CONCRETE TEST BOX

SCALE: NOT TO SCALE

Inland Empire Utilities Agency
A MUNICIPAL WATER DISTRICT

APPROVED BY:
JASON MARSEILLES, P.E. — JULY 2025
MANAGER OF ENGINEERING — DATE

DESIGN BY: GHD, INC.
APPROVED BY:
CHRIS BARTLEMAN, P.E. — JULY 2025
C81075 — DATE

Inland Empire Utilities Agency

CONCRETE TEST BOX
TEST STATION DETAIL

REVISION			
NO.	BY	DATE	APPROVED

CM-TS-002

SHEET 1 OF 2

\\ghdnet\ghd\US\Irvine\Projects\111\11181240 ieua on call engineering serv\phase 08 - ieua standard details\4- delivery documents\1- CAD\Sheets\Cathodic Protection Details\CM-TS-002 Concrete Test Box Test Station.dwg May 30, 2025 - 3:32pm

NOTES:

1. USE CASE I OR CASE II FOR PIPE CLOSEST TO THE CURB.
2. USE CASE III FOR PIPE CLOSE TO THE CENTER MEDIAN WHERE MEDIAN IS RAISED AND DISTANCE OF GREATER THAN 10'.
3. FOR CASE IV (UNIMPROVED AREAS), USE CARSONITE CTS TEST STATIONS AND INSTALL POST 5' MINIMUM FROM PIPELINE, APPROX. 3' BELOW GRADE.
4. IF DIFFERENT FROM THESE FOUR CASES, IEUA SHALL DETERMINE THE TEST STATION LOCATION.

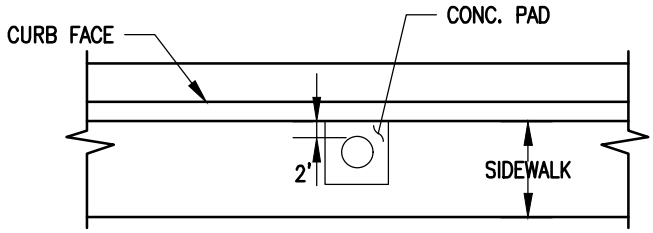

CASE I

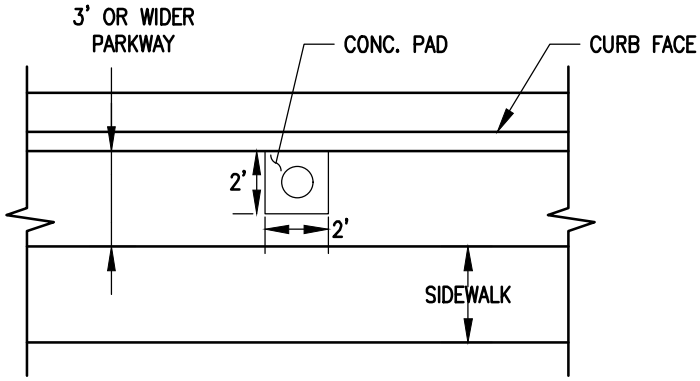

CASE II

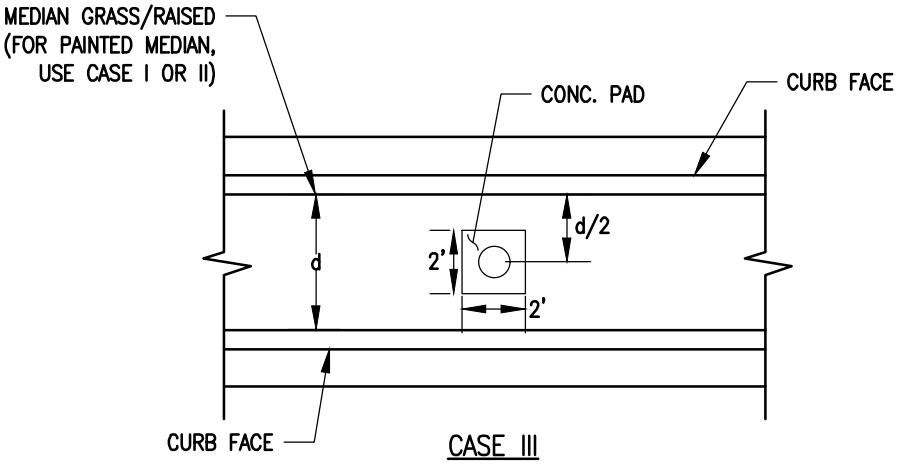

CASE III

SCALE: NOT TO SCALE

Inland Empire Utilities Agency
A MUNICIPAL WATER DISTRICT

APPROVED BY:

JASON MARSEILLES, P.E. — JULY 2025
MANAGER OF ENGINEERING — DATE

DESIGN BY: GHD, INC.

APPROVED BY:
CHRIS BARTLEMAN, P.E. — JULY 2025
C81075 — DATE

Inland Empire Utilities Agency

CONCRETE TEST BOX
TEST STATION DETAIL

REVISION			
NO.	BY	DATE	APPROVED

CM-TS-002

SHEET 2 OF 2

\\ghdnet\ghd\US\Irvine\Projects\111\11181240 ieua on call engineering serv\phase 08 - ieua standard details\4- delivery documents\1- CAD\Sheets\Cathodic Protection Details\CM-TS-002 Concrete Test Box Test Station.dwg May 30, 2025 - 3:32pm

NOTES:

1. LEAVE SUFFICIENT SLACK (3 FEET MIN.) IN LEAD WIRE COILED WITHIN TEST BOX.

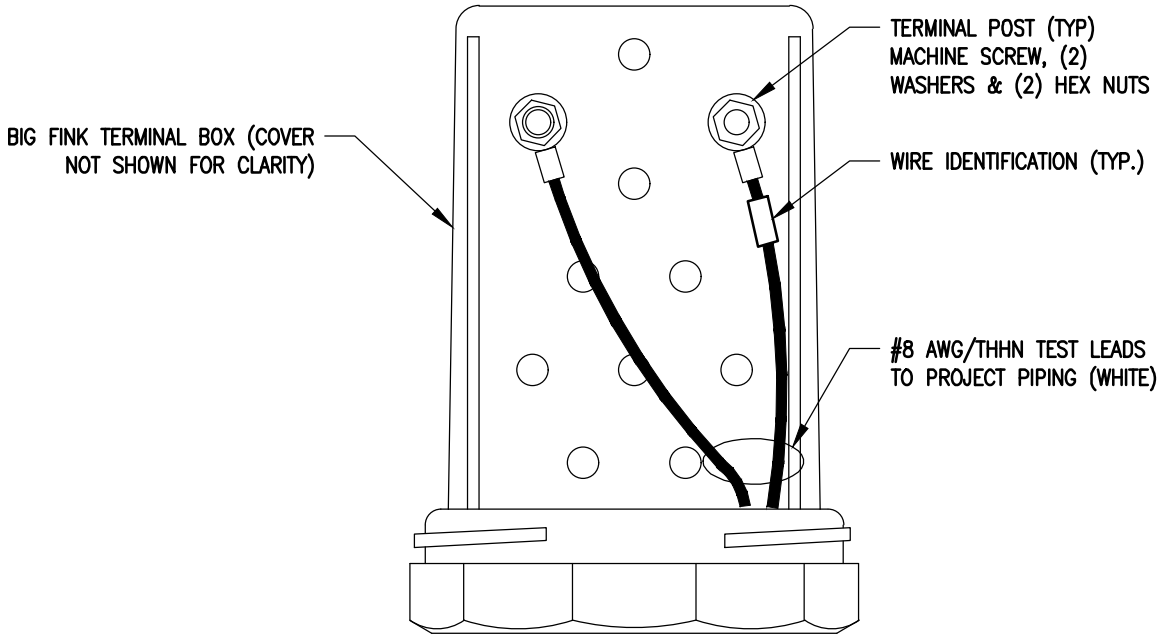

MONITORING TEST STATION TERMINAL BOARD

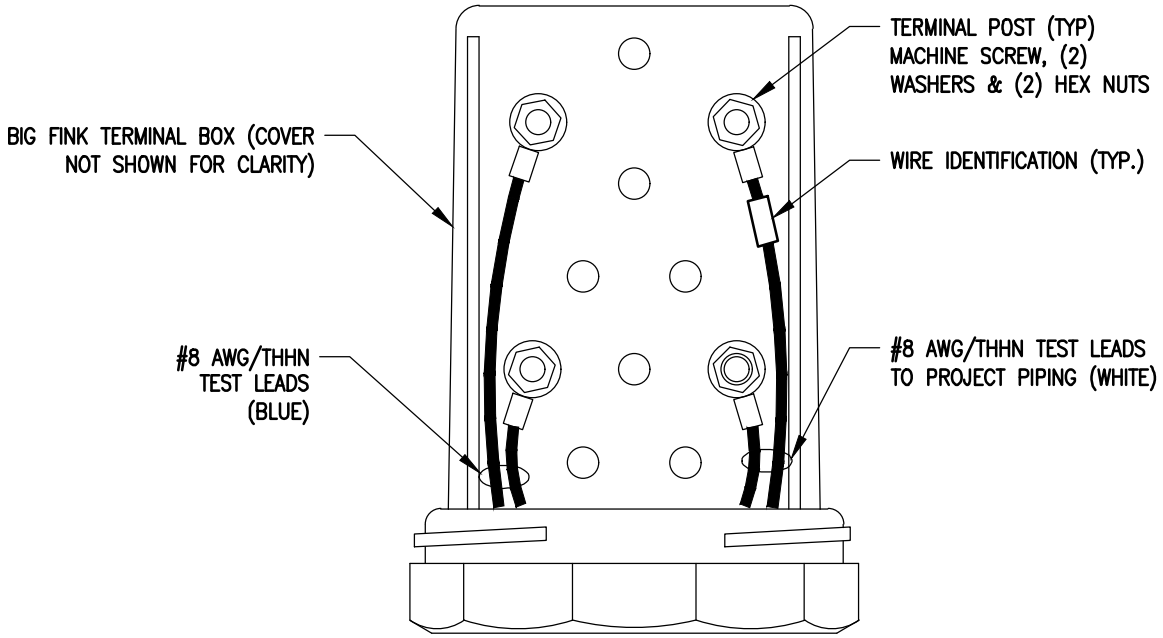

CASING TEST STATION TERMINAL BOARD

SCALE: NOT TO SCALE

Inland Empire Utilities Agency
A MUNICIPAL WATER DISTRICT

APPROVED BY:

JASON MARSEILLES, P.E. — JULY 2025
MANAGER OF ENGINEERING — DATE

DESIGN BY: GHD, INC.

APPROVED BY:
CHRIS BARTLEMAN, P.E. — JULY 2025
C81075 — DATE

Inland Empire Utilities Agency

TERMINAL BOARD DETAILS

REVISION			
NO.	BY	DATE	APPROVED

CM-TS-003

SHEET 1 OF 2

\\ghdnet\ghd\US\Irvine\Projects\111\11181240 ieua on call engineering serv\phase 08 - ieua standard details\4- delivery documents\1- CAD\Sheets\Cathodic Protection Details\CM-TS-003 Terminal Board Details.dwg May 30, 2025 - 3:33pm

NOTES:

1. LEAVE SUFFICIENT SLACK (3 FEET MIN.) IN LEAD WIRE COILED WITHIN TEST BOX.

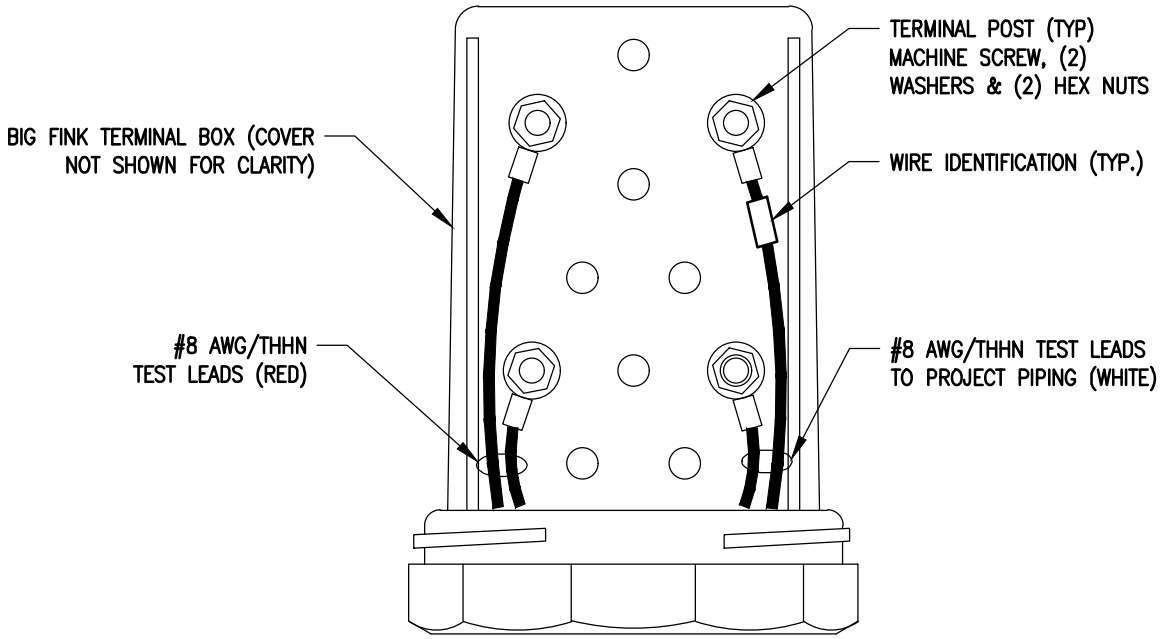

INSULATING TEST STATION TERMINAL BOARD

SCALE: NOT TO SCALE

Inland Empire Utilities Agency
A MUNICIPAL WATER DISTRICT

APPROVED BY:

JASON MARSEILLES, P.E. — JULY 2025
MANAGER OF ENGINEERING — DATE

DESIGN BY: GHD, INC.

APPROVED BY:
CHRIS BARTLEMAN, P.E. — JULY 2025
C81075 — DATE

Inland Empire Utilities Agency

TERMINAL BOARD DETAILS

REVISION			
NO.	BY	DATE	APPROVED

CM-TS-003

SHEET 2 OF 2

\\ghdnet\ghd\US\irvine\Projects\111\11181240 ieua on call engineering serv\phase 08 - ieua standard details\4- delivery documents\1- CAD\Sheets\Cathodic Protection Details\CM-TS-003 Terminal Board Details.dwg May 30, 2025 - 3:33pm

NOTES:

1. PROCEDURE SHOWN IS TO BE USED AS A GENERAL GUIDE ONLY.
2. CONSULT MANUFACTURER'S LITERATURE FOR SPECIFIC INSTALLATION INSTRUCTIONS.

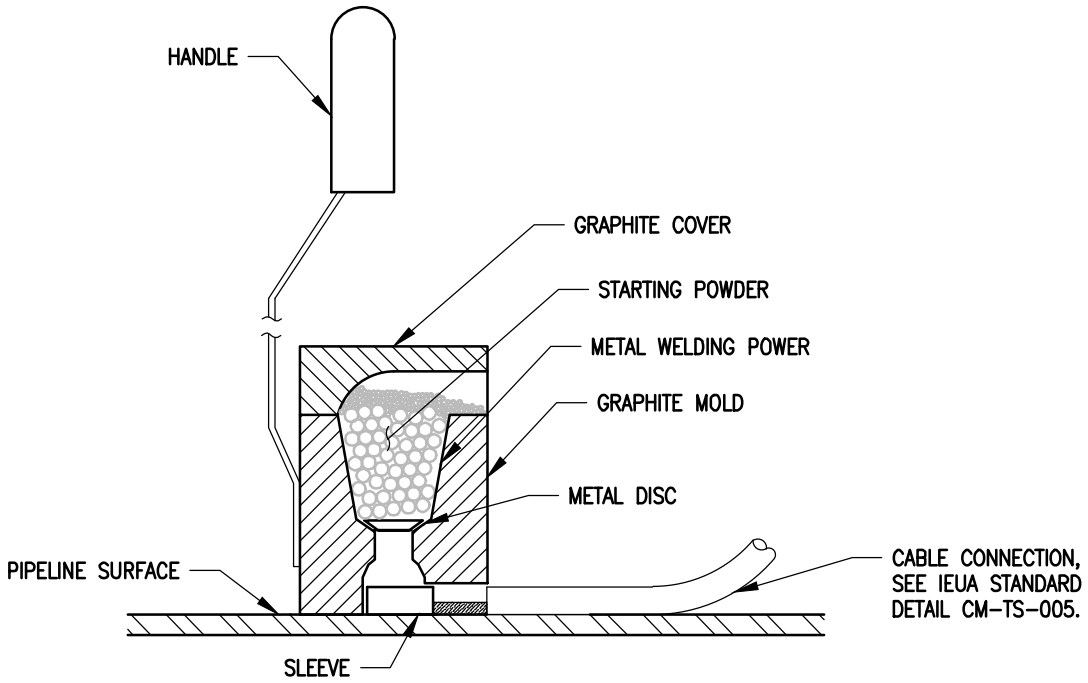

STEP 1. FILE STRUCTURE CONNECTION AREA (3" + 3" MIN.) TO BARE SHINY METAL AND CLEAN.

STEP 2. STRIP INSULATION FROM WIRE. ATTACH SLEEVE REQUIRED ON #6 AWG WIRE OR SMALLER.

STEP 3. HOLD MOLD FIRMLY WITH OPENING AWAY FROM OPERATOR AND IGNITE WITH FLINT GUN.

STEP 4. REMOVE SLAG FROM CONNECTION AND PEEN WELD FOR SOUNDNESS.

STEP 5. COVER CONNECTION AND EXPOSED STRUCTURE SURFACE WITH EPOXY COATING COMPOUND.

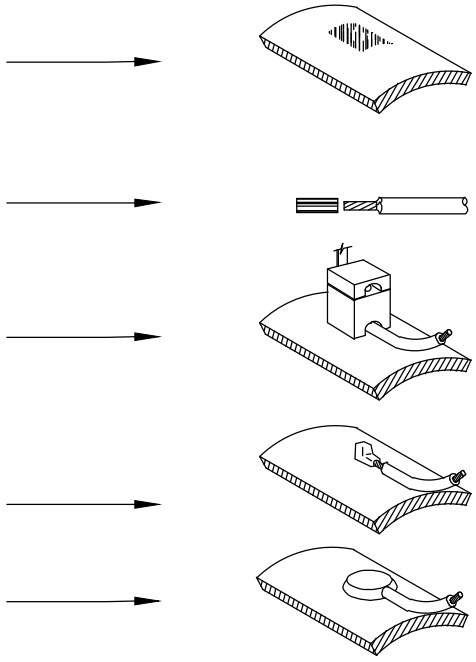

SCALE: NOT TO SCALE

Inland Empire Utilities Agency
A MUNICIPAL WATER DISTRICT

APPROVED BY:
JASON MARSEILLES, P.E. — JULY 2025
MANAGER OF ENGINEERING — DATE

DESIGN BY: GHD, INC.
APPROVED BY:
CHRIS BARTLEMAN, P.E. — JULY 2025
C81075 — DATE

Inland Empire Utilities Agency

EXOTHERMIC WELD DETAIL

REVISION			
NO.	BY	DATE	APPROVED

CM-TS-004

SHEET 1 OF 1

\\ghdnet\ghd\US\Irvine\Projects\111\11181240 ieua on call engineering serv\phase 08 - ieua standard details\4- delivery documents\1- CAD\Sheets\Cathodic Protection Details\CM-TS-004 Exothermic Weld.dwg May 30, 2025 - 3:33pm

NOTES:

1.

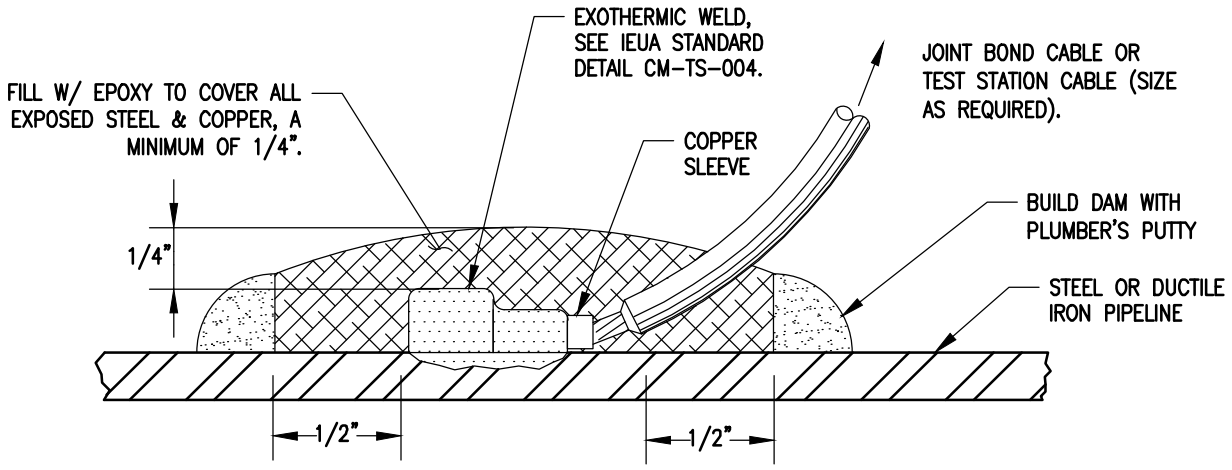

SCALE: NOT TO SCALE

Inland Empire Utilities Agency
A MUNICIPAL WATER DISTRICT

APPROVED BY:

JASON MARSEILLES, P.E. — JULY 2025
MANAGER OF ENGINEERING — DATE

DESIGN BY: GHD, INC.

APPROVED BY:
CHRIS BARTLEMAN, P.E. — JULY 2025
C81075 — DATE

Inland Empire Utilities Agency

CABLE CONNECTION DETAIL

REVISION			
NO.	BY	DATE	APPROVED

CM-TS-005

SHEET 1 OF 1

\\ghdnet\ghd\US\Irvine\Projects\111\11181240 ieua on call engineering serv\phase 08 - ieua standard details\4- delivery documents\1- CAD\Sheets\Cathodic Protection Details\CM-TS-005 Cable Connection.dwg May 30, 2025 - 3:33pm

NOTES:

1. ALL MECHANICAL JOINTS, EXCEPT IFJ, SHALL BE BONDED TO PROVIDE CONTINUITY.
2. PROVIDE ENOUGH SLACK IN THE BOND CABLES FOR JOINT MOVEMENT.
3. THIS DETAIL IS APPLICABLE TO DUCTILE IRON PIPING ONLY.

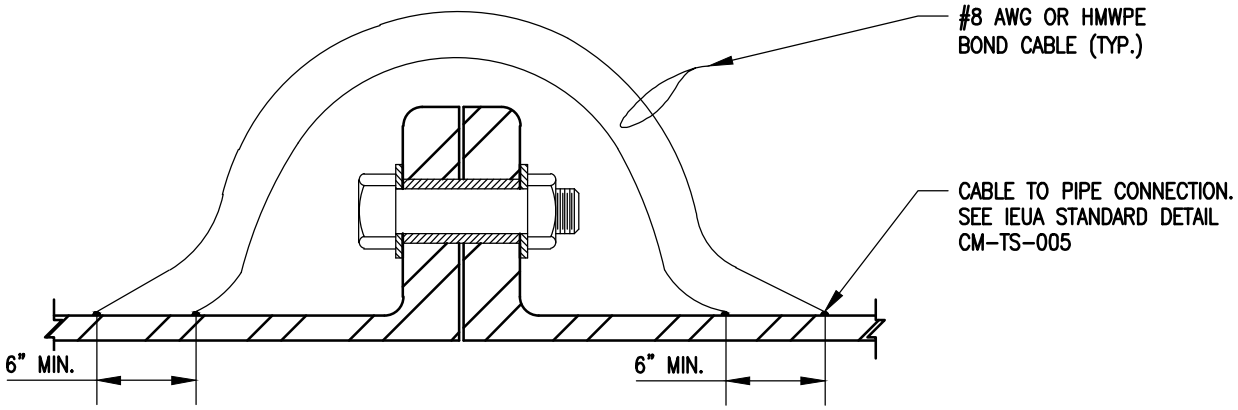

FLANGE JOINT BONDING – INLINE

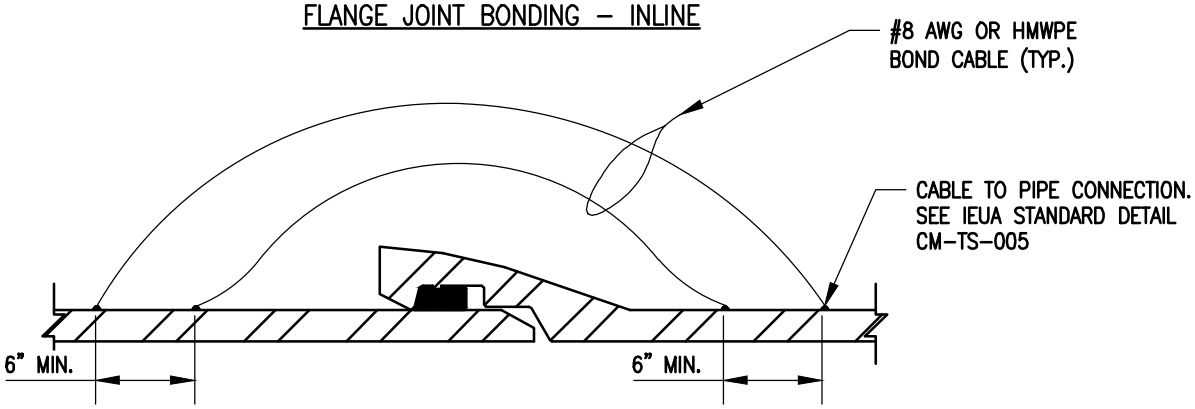

PUSH-ON JOINT BONDING – INLINE

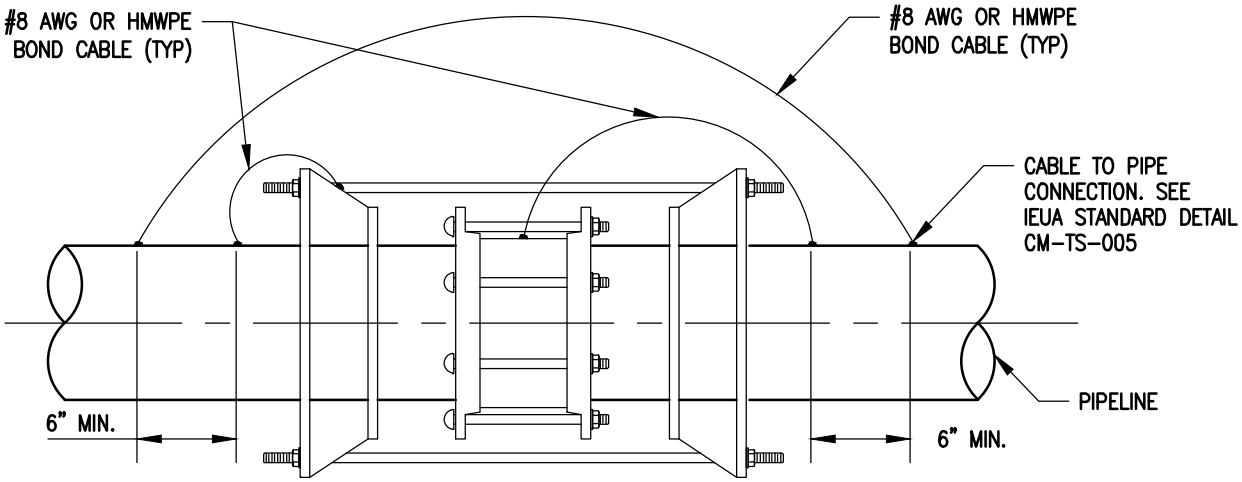

FLEXIBLE COUPLING WITH RESTRAINER

SCALE: NOT TO SCALE

Inland Empire Utilities Agency
A MUNICIPAL WATER DISTRICT

APPROVED BY:

JASON MARSEILLES, P.E. — JULY 2025
MANAGER OF ENGINEERING — DATE

DESIGN BY: GHD, INC.

APPROVED BY:
CHRIS BARTLEMAN, P.E. — JULY 2025
C81075 — DATE

Inland Empire Utilities Agency

JOINT BONDING INLINE DETAIL

REVISION			
NO.	BY	DATE	APPROVED

CM-TS-006

SHEET 1 OF 1

\\ghdnet\ghd\US\Irvine\Projects\111\11181240 ieua on call engineering serv\phase 08 – ieua standard details\4– delivery documents\1– CAD\Sheets\Cathodic Protection Details\CM-TS-006 Joint Bonding Inline.dwg May 30, 2025 – 3:34pm

NOTES:

1. ALL BOND WIRES SHALL BE MIN. #8 AWG. STANDARD COPPER WIRE WITH HMWPE INSULATION.
2. PROVIDE ENOUGH SLACK IN THE BOND CABLES FOR JOINT MOVEMENT.
3. MINIMUM WELD SPACING SHALL BE 6" AND OUTSIDE OF THRUST BLOCKS.

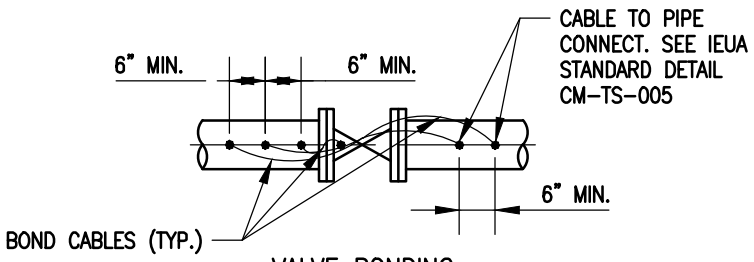

VALVE BONDING

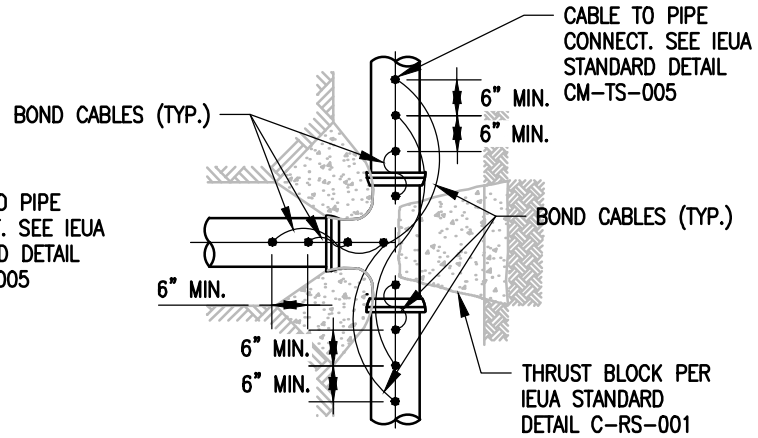

TEE BONDING

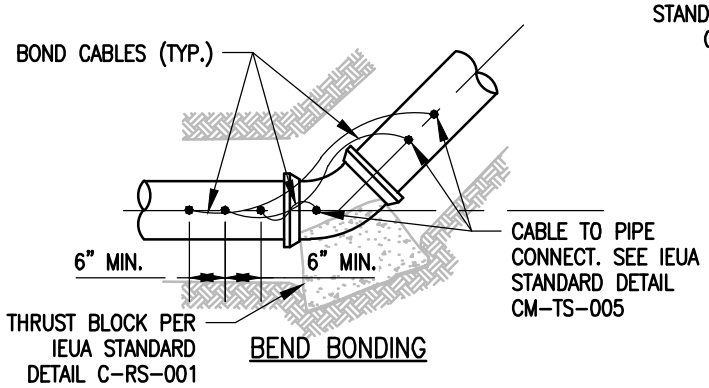

BEND BONDING

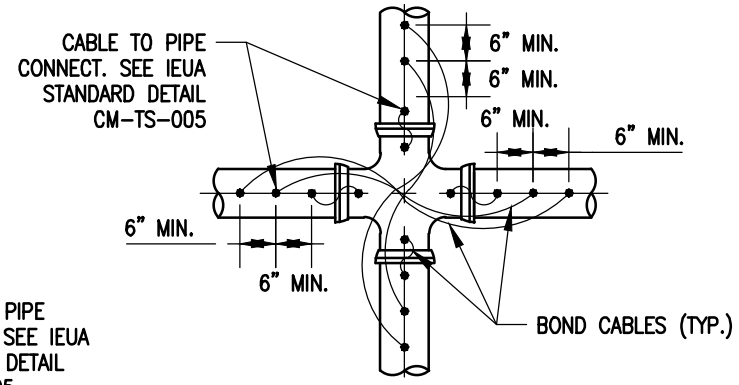

CROSS BONDING

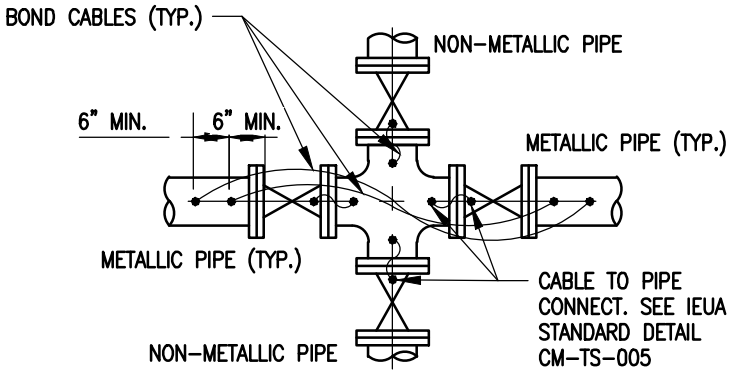

VALVE CROSS BONDING
METALLIC PIPE TO NON-METALLIC PIPE

SCALE: NOT TO SCALE

Inland Empire Utilities Agency
A MUNICIPAL WATER DISTRICT

APPROVED BY:

JASON MARSEILLES, P.E. — JULY 2025
MANAGER OF ENGINEERING — DATE

DESIGN BY: GHD, INC.

APPROVED BY:
CHRIS BARTLEMAN, P.E. — JULY 2025
C81075 — DATE

Inland Empire Utilities Agency

JOINT BONDING
PIPE FITTINGS DETAIL

REVISION			
NO.	BY	DATE	APPROVED

CM-TS-007

SHEET 1 OF 1

\\ghdnet\ghd\US\Irvine\Projects\111\11181240 ieua on call engineering serv\phase 08 - ieua standard details\4- delivery documents\1- CAD\Sheets\Cathodic Protection Details\CM-TS-007 Joint Bonding Pipe Fittings.dwg May 30, 2025 - 3:34pm

NOTES:

1. INSTALL THREE (3) BONDING RODS PER JOINT INSTALLED AT 120° SPACING.

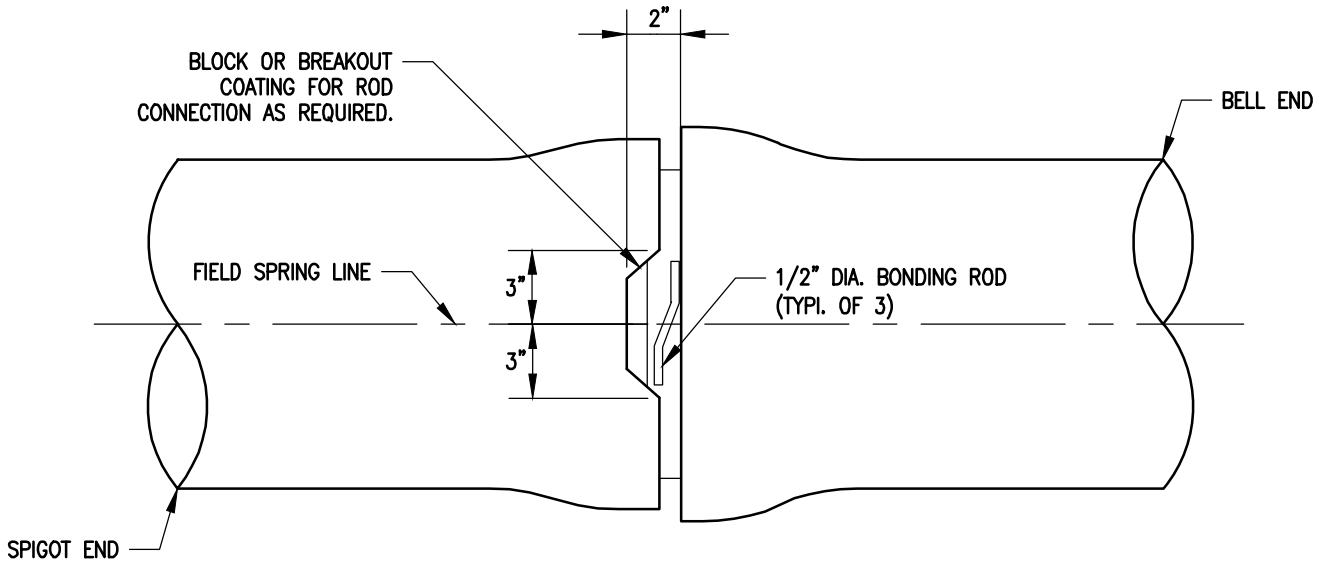

SIDE VIEW

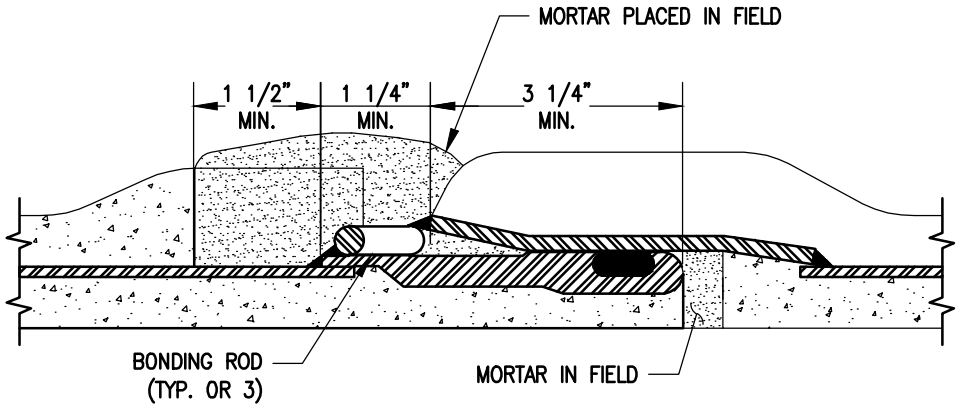

BONDING ROD DETAIL

SCALE: NOT TO SCALE

Inland Empire Utilities Agency
A MUNICIPAL WATER DISTRICT

APPROVED BY:

JASON MARSEILLES, P.E. — JULY 2025
MANAGER OF ENGINEERING — DATE

DESIGN BY: GHD, INC.

APPROVED BY:
CHRIS BARTLEMAN, P.E. — JULY 2025
C81075 — DATE

Inland Empire Utilities Agency

JOINT BONDING
CML&C STEEL PIPE DETAIL

REVISION			
NO.	BY	DATE	APPROVED

CM-TS-008

SHEET 1 OF 1

\\ghdnet\ghd\US\Irvine\Projects\111\11181240 ieua on call engineering serv\phase 08 - ieua standard details\4- delivery documents\1- CAD\Sheets\Cathodic Protection Details\CM-TS-008 Joint Bonding CML&C Steel Pipe.dwg May 30, 2025 - 3:34pm

NOTES:

1. NOT FOR CHEMICAL USE.
2. INSTALL WELDED OUTLET FOR STEEL PIPE APPLICATIONS.
3. INSTALL A DIAPHRAGM SEAL IN WASTEWATER APPLICATIONS.
4. SPECIFIC APPLICATIONS SUCH AS SLUDGE REQUIRE A MINIMUM OF 0.5 INCH PIPING AND VALVES.

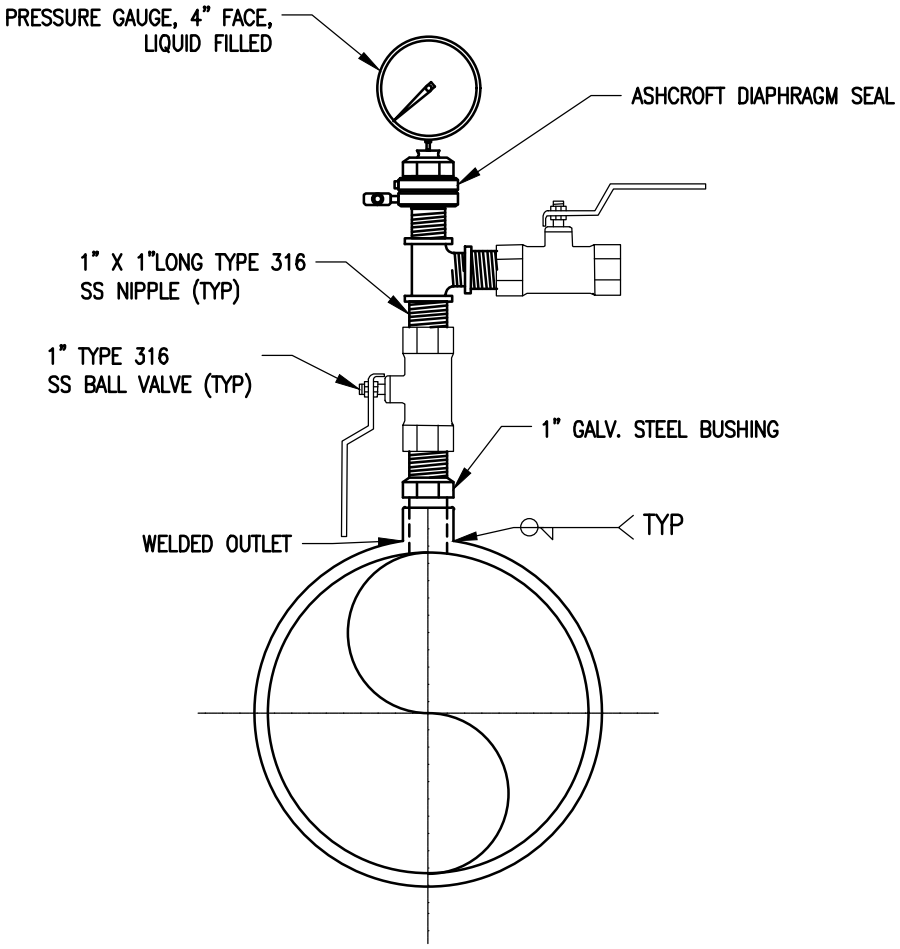

SCALE: NOT TO SCALE

Inland Empire Utilities Agency
A MUNICIPAL WATER DISTRICT

APPROVED BY:

JASON MARSEILLES, P.E. — JULY 2025
MANAGER OF ENGINEERING — DATE

DESIGN BY: GHD, INC.

APPROVED BY:
CHRIS BARTLEMAN, P.E. — JULY 2025
C81075 — DATE

Inland Empire Utilities Agency

PRESSURE GAUGE DETAIL

REVISION			
NO.	BY	DATE	APPROVED

E-PG-001

SHEET 1 OF 1

\\ghdnet\ghd\US\Irvine\Projects\111\11181240 ieua on call engineering serv\phase 08 - ieua standard details\4- delivery documents\1- CAD\Sheets\Electrical Standard Details\E-PG-001 Pressure Gauge.dwg May 30, 2025 - 3:34pm

NOTES:

1. NOT FOR CHEMICAL USE.
2. INSTALL WELDED OUTLET FOR STEEL PIPE APPLICATIONS.
3. INSTALL A DIAPHRAGM SEAL IN WASTEWATER APPLICATIONS.
4. SPECIFIC APPLICATIONS SUCH AS SLUDGE REQUIRE A MINIMUM OF 0.5 INCH PIPING AND VALVES.

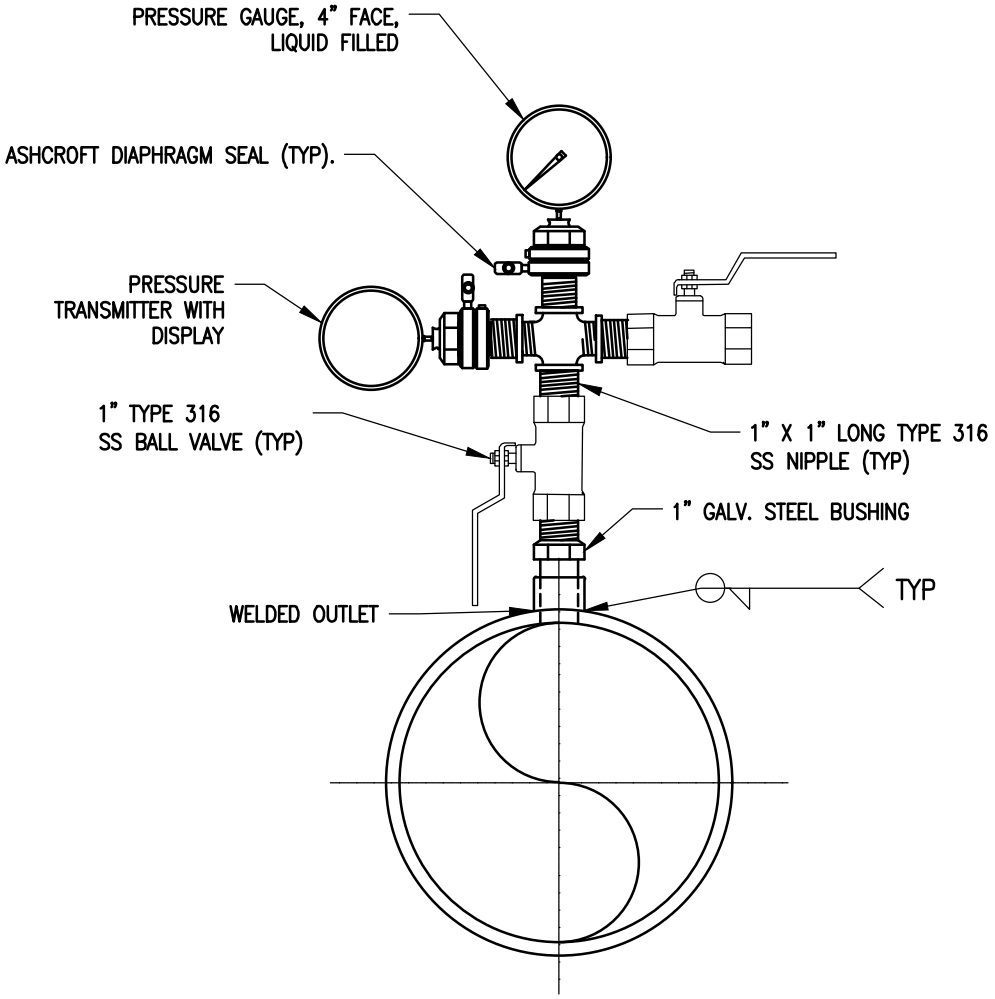

SCALE: NOT TO SCALE

Inland Empire Utilities Agency
A MUNICIPAL WATER DISTRICT

APPROVED BY:
JASON MARSEILLES, P.E. — JULY 2025
MANAGER OF ENGINEERING — DATE

DESIGN BY: GHD, INC.
APPROVED BY:
CHRIS BARTLEMAN, P.E. — JULY 2025
C81075 — DATE

Inland Empire Utilities Agency

PRESSURE GAUGE & TRANSMITTER DETAIL

REVISION			
NO.	BY	DATE	APPROVED

SHEET 1 OF 1
E-PG-002
SHEET 1 OF 1

\\ghdnet\ghd\US\Irvine\Projects\111\11181240 ieua on call engineering serv\phase 08 - ieua standard details\4- delivery documents\1- CAD\Sheets\Electrical Standard Details\E-PG-002 Pressure Gauge & Transmitter Detail.dwg May 30, 2025 - 3:35pm

NOTES:

1. SUITABLE FOR 1–2" CHEMICAL INJECTION PIPELINES.
2. THIS CONFIGURATION IS TYPICAL OF DUTY AND STANDBY.
3. ALL PIPE AND FITTINGS SHALL BE CPVC WITH SOLVENT WELDS.
4. SEALS TO BE EDPM.
5. PIPE SUPPORTS WILL BE STAINLESS STEEL UNISTRUT AND BRACKETS.
6. RECOMMENDED TO BE LOCATED OUT OF DIRECT SUNLIGHT OR COATED WITH YELLOW PAINT PER SPECIFICATIONS.

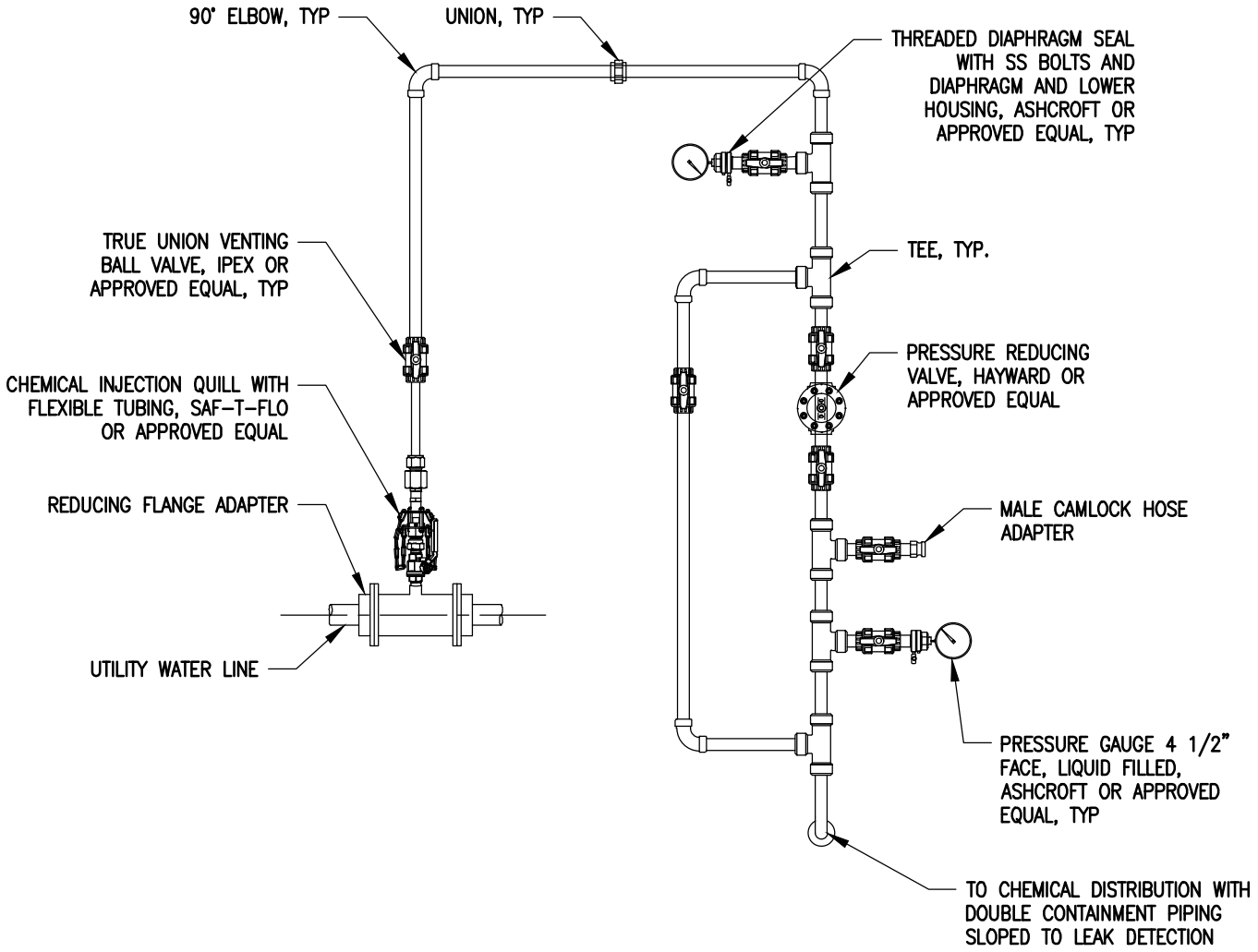

SCALE: NOT TO SCALE

Inland Empire Utilities Agency
A MUNICIPAL WATER DISTRICT

APPROVED BY:

JASON MARSEILLES, P.E. — JULY 2025
MANAGER OF ENGINEERING — DATE

DESIGN BY: GHD, INC.

APPROVED BY:
CHRIS BARTLEMAN, P.E. — JULY 2025
C81075 — DATE

Inland Empire Utilities Agency

SODIUM HYPOCHLORITE INJECTION PIPING DETAIL

REVISION			
NO.	BY	DATE	APPROVED

C-PC-003

SHEET 1 OF 1

\\ghdnet\ghd\US\Irvine\Projects\111\11181240 ieua on call engineering serv\phase 08 – ieua standard details\4– delivery documents\1– CAD\Sheets\Civil Standard Details\XX-XX-XXX Sodium Hypochlorite Injection Piping Detail.dwg May 30, 2025 – 3:35pm

NOTES:

1. MARKERS ARE REQUIRED WHEN UTILITY VALVES LOCATED OUTSIDE OF PAVEMENT OR IN AN EASEMENT NOT ADJACENT TO THE RIGHT-OF-WAY.
2. MARKERS SHALL BE CARSONITE HIGH PERFORMANCE UTILITY MARKER MADE OF FIBERGLASS COMPOSITE.
3. MARKERS SHALL BE GREEN FOR WASTEWATER AND PURPLE FOR RECLAIMED WATER.
4. ADDITIONAL MARKERS SHALL BE INSTALLED AS NEEDED SO THAT THE DISTANCE BETWEEN MARKERS DOES NOT EXCEED 1000 FEET.

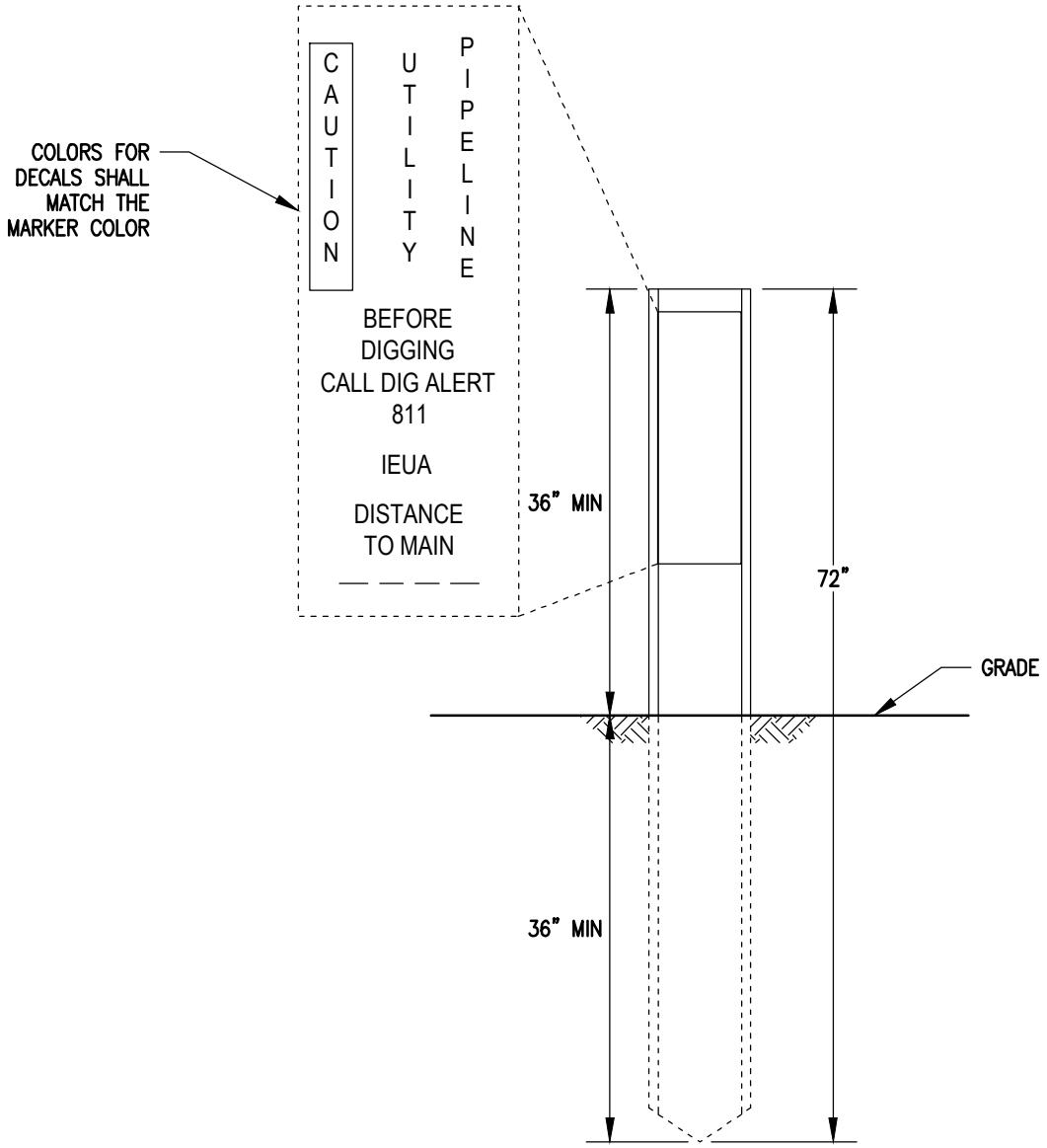

SCALE: NOT TO SCALE

Inland Empire Utilities Agency
A MUNICIPAL WATER DISTRICT

APPROVED BY:

JASON MARSEILLES, P.E. — JULY 2025
MANAGER OF ENGINEERING — DATE

DESIGN BY: GHD, INC.

APPROVED BY:
CHRIS BARTLEMAN, P.E. — JULY 2025
C81075 — DATE

Inland Empire Utilities Agency

UTILITY MARKER POST DETAIL

REVISION			
NO.	BY	DATE	APPROVED

C-SW-001

SHEET 1 OF 1

\\ghdnet\ghd\US\irvine\Projects\111\11181240 ieua on call engineering serv\phase 08 - ieua standard details\4- delivery documents\1- CAD\Sheets\Civil Standard Details\XX-XX-XXX Utility Marker Post.dwg May 30, 2025 - 3:35pm

NOTES:

1. COAT ALL ABOVE GRADE PIPE AND APPURTENANCES PER PROJECT SPECIFICATIONS.

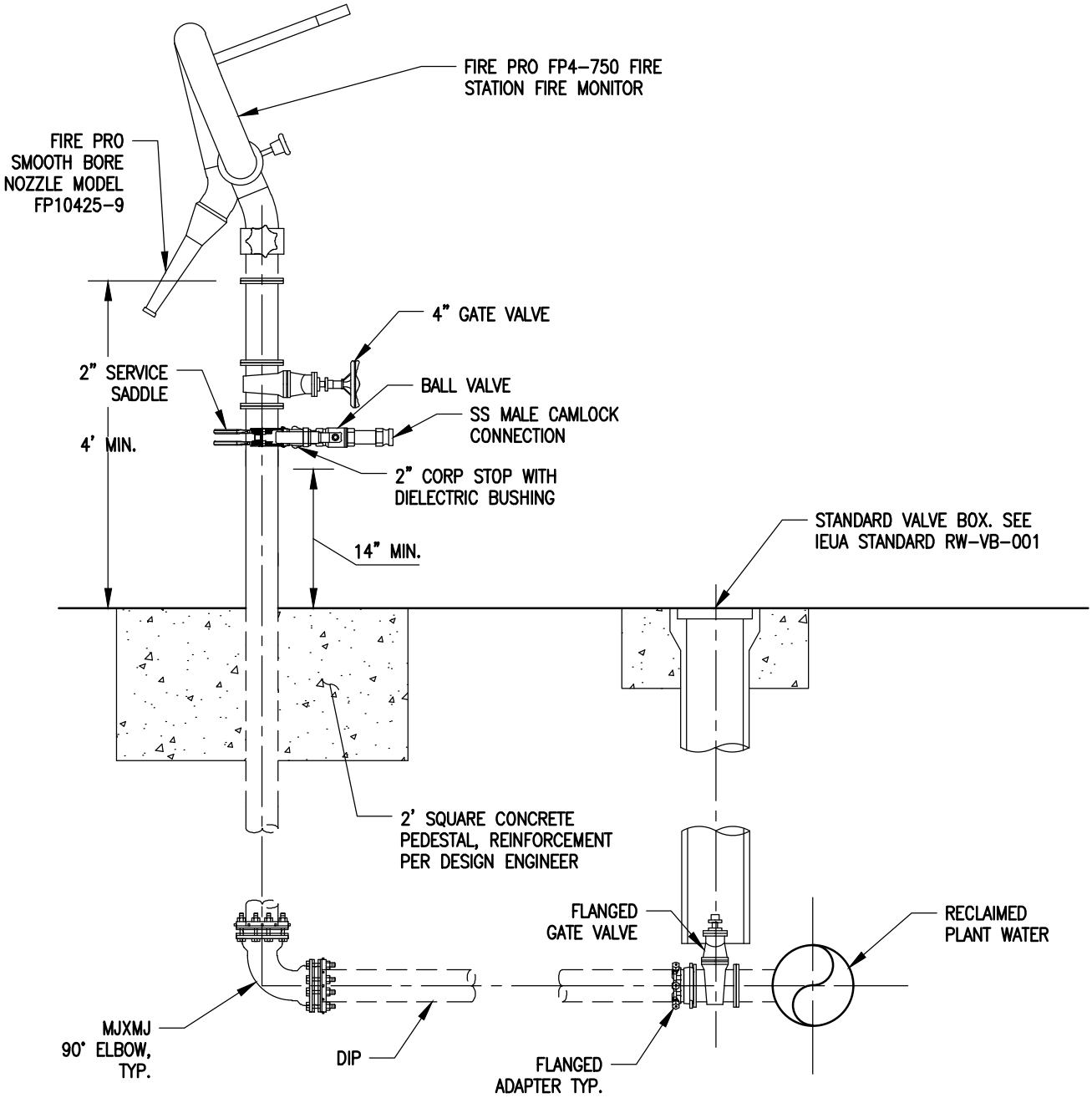

SCALE: NOT TO SCALE

Inland Empire Utilities Agency
A MUNICIPAL WATER DISTRICT

APPROVED BY:

JASON MARSEILLES, P.E. — JULY 2025
MANAGER OF ENGINEERING — DATE

DESIGN BY: GHD, INC.

APPROVED BY:
CHRIS BARTLEMAN, P.E. — JULY 2025
C81075 — DATE

Inland Empire Utilities Agency

WATER CANNON DETAIL

REVISION			
NO.	BY	DATE	APPROVED

C-CW-002

SHEET 1 OF 1

\\ghdnet\ghd\US\Irvine\Projects\111\11181240 ieua on call engineering serv\phase 08 - ieua standard details\4- delivery documents\1- CAD\Sheets\Civil Standard Details\XX-XX-XXX Water Cannon.dwg May 30, 2025 - 3:35pm

NOTES:

1. SUITABLE FOR 1" TO 2" APPLICATIONS.
2. PIPE SHALL BE STAINLESS STEEL, COPPER, BRONZE, OR BRASS AND PIPE APPURTENANCES SHALL BE BRASS, BRONZE, OR STAINLESS STEEL.
3. MOUNTING BRACKET AND PIPE SHALL BE COATED WITH EPOXY PAINT PER SPECIFICATIONS.
4. INSTALL DIELECTRIC COUPLINGS AND PROPER ISOLATION BETWEEN DISSIMILAR METALS.

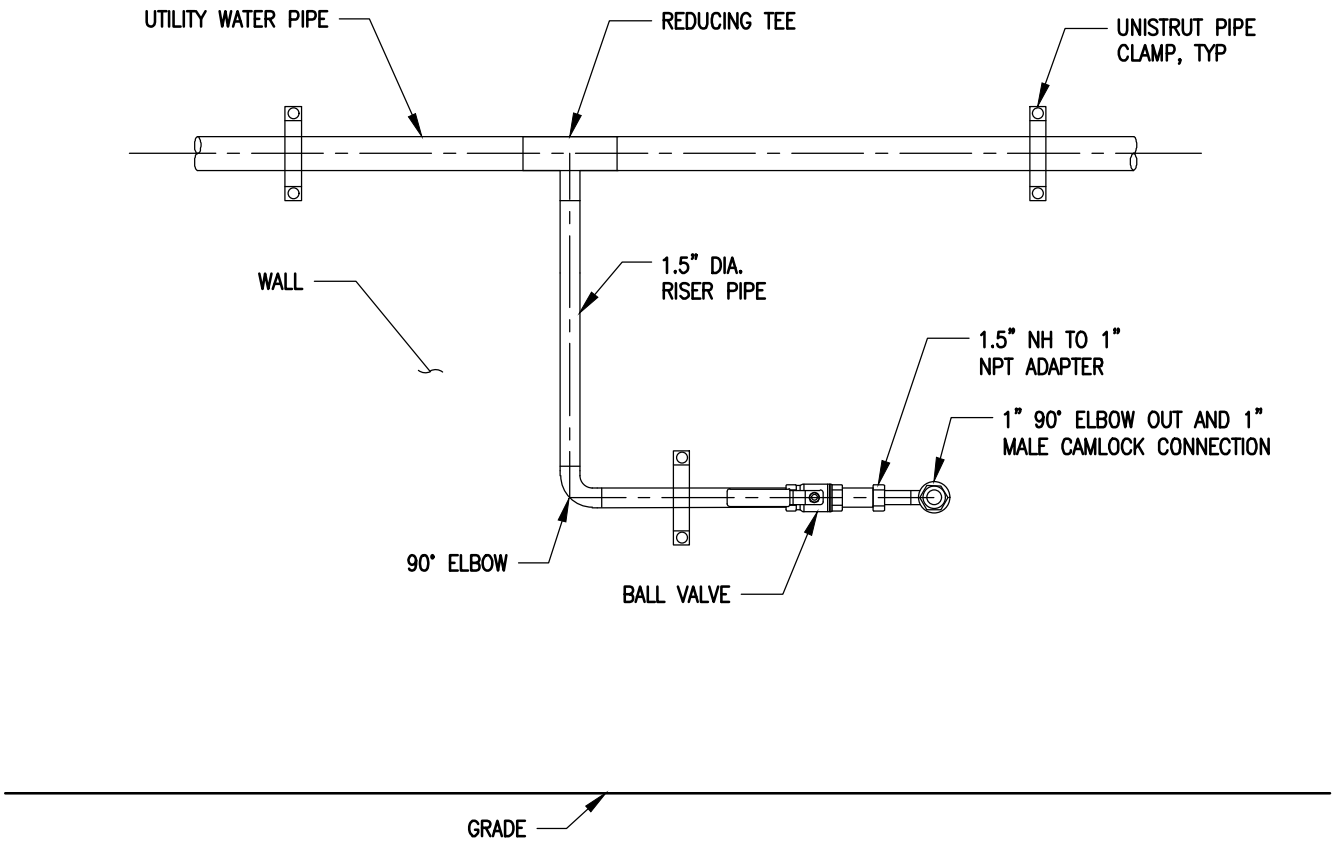

SCALE: NOT TO SCALE

Inland Empire Utilities Agency
A MUNICIPAL WATER DISTRICT

APPROVED BY:

JASON MARSEILLES, P.E. — JULY 2025
MANAGER OF ENGINEERING — DATE

DESIGN BY: GHD, INC.

APPROVED BY:
CHRIS BARTLEMAN, P.E. — JULY 2025
C81075 — DATE

Inland Empire Utilities Agency

UTILITY WALL MOUNTED WATER HOSE BIBB DETAIL

REVISION			
NO.	BY	DATE	APPROVED

C-SW-003

SHEET 1 OF 1

\\ghdnet\ghd\US\Irvine\Projects\111\11181240 ieua on call engineering serv\phase 08 - ieua standard details\4- delivery documents\1- CAD\Sheets\Civil Standard Details\XX-XX-XXX Utility Water Hose Bibb.dwg May 30, 2025 - 3:36pm

NOTES:

1. LOCATOR WIRE SHALL BE BROUGHT TO THE SURFACE AT 660 FEET OC MAXIMUM. LOCATOR WIRE SHALL TERMINATE AT EACH VALVE BOX AND BE CAPABLE OF EXTENDING 12" ABOVE TOP OF BOX.
2. LOCATOR WIRE SHALL BE INSTALLED OVER ALL NON-METALLIC RECLAIMED WATERLINES AND FORCE MAINS LOCATED WITH THE RIGHT-OF-WAY.
3. LOCATION OF VALVE BOX SHALL BE PER STANDARD CM-TS-002.
4. USE CAST IRON COVER LABELED "LS-TEST".
5. USE DUCT TAPE AS NECESSARY TO HOLD WIRE DIRECTLY ON THE TOP OF PIPE.
6. LOCATOR WIRE TO BE CONTINUOUS STRAND.
7. SPLICES TO BE DONE WITH A CRIMPABLE BUTT CONNECTOR.
8. FOR PIPE DEPTHS GREATER THAN 8 FEET, LOCATOR WIRE SHALL BE PLACED ABOVE PIPE AT A MAXIMUM 8 FEET DEPTH. UTILITY MARKER TAPE SHALL BE PLACED 1 FOOT ABOVE THE LOCATOR WIRE.
9. LOCATABILITY TEST SHALL BE PERFORMED ON ALL LOCATOR WIRES.

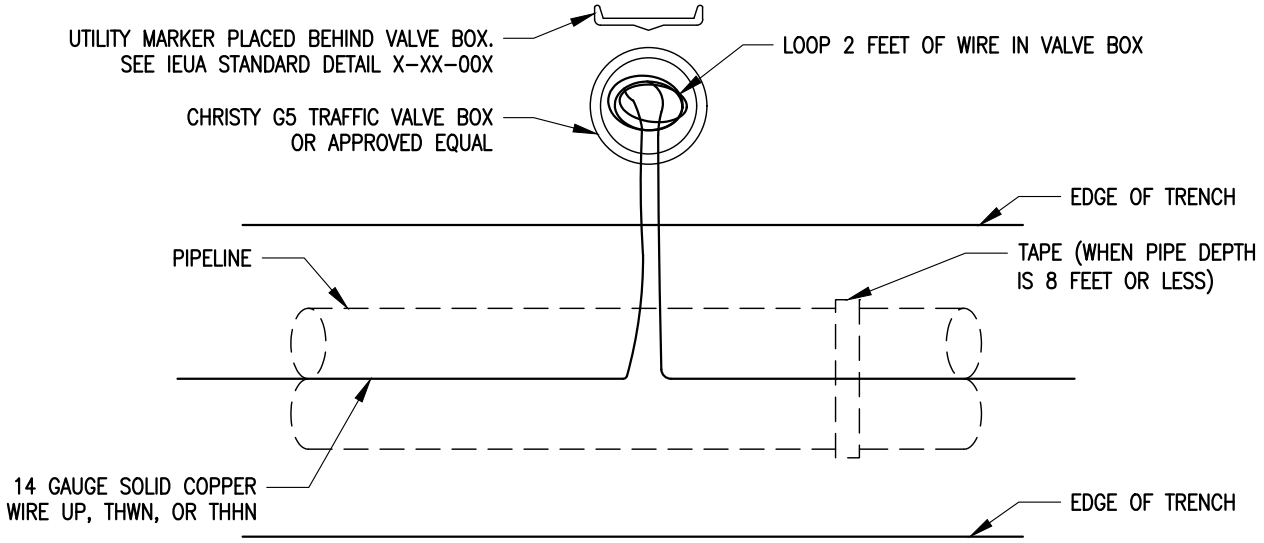

PLAN

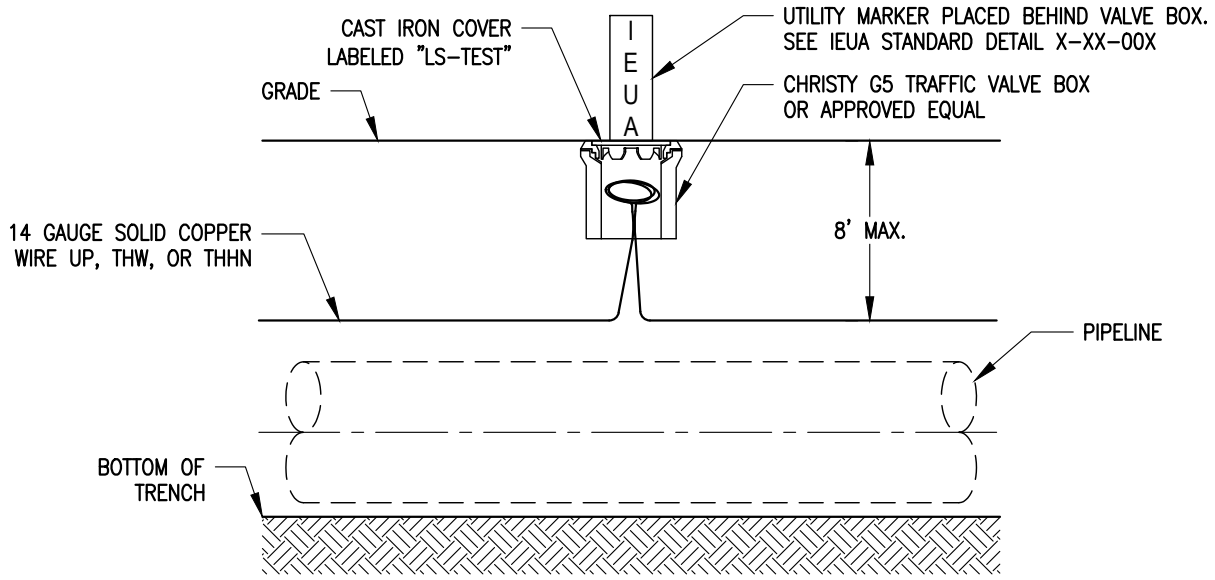

PROFILE

SCALE: NOT TO SCALE

Inland Empire Utilities Agency
A MUNICIPAL WATER DISTRICT

APPROVED BY:

JASON MARSEILLES, P.E. — JULY 2025
MANAGER OF ENGINEERING — DATE

DESIGN BY: GHD, INC.

APPROVED BY:
CHRIS BARTLEMAN, P.E. — JULY 2025
C81075 — DATE

Inland Empire Utilities Agency

PIPE LOCATOR WIRE DETAIL

REVISION			
NO.	BY	DATE	APPROVED

C-PC-004

SHEET 1 OF 1

\\ghdnet\ghd\US\Irvine\Projects\111\11181240 IEUA On Call Engineering Serv\Phase 08 - IEUA Standard Details\4- Delivery Documents\1- CAD\Sheets\Sewer Line Details\XX-XX-XXX Pipe Locator Wire.dwg May 30, 2025 - 3:54pm

Inland Empire Utilities Agency
A MUNICIPAL WATER DISTRICT

GA.10 IEUA Board Approved Standardized Equipment

GA.10 IEUA Board Approved Standardized Equipment

Note to PM: Check for an updated list

Material/Equipment/Product	Action Item(s)	Facility	Board Meeting Date	Manufacturer
ARI Combination Air and Vacuum Relief Valves	Standardization & Sole Source Procurement	Agencywide	Nov 20, 2024	A.R.I.
Motor Control Center, Electric Drives, Control System Hardware	Rockwell Contract Standardization & Sole Source (5 years)	Agencywide	Dec 18, 2019	Rockwell Allen Bradley
SSI Fine Bubble Diffusers	Standardization & Sole Source Procurement (preselection agreement with SSI)	RP-4 & RP-5	May 20, 2020	Stamford Scientific International Inc. (SSI)
Rockwell SCADA System Technical Support Services	Sole Source Purchase (7 years)	Agencywide	Sep 15, 2021	Rockwell Automation
Ammonia Analyzers	Standardization & Sole Source Procurement	Agencywide	Oct 20, 2021	Horiba
Chlorine Analyzers	Standardization & Sole Source Procurement	Agencywide	Dec 8, 2021	Electro-Chemical Devices
Bar Screens	Standardization & Single Source Procurement	Agencywide	Nov 16, 2022	Duperon Corporation
FKC Rotary Drum Thickeners	Standardization & Preselection Agreement	RP-1 & RP-5	Mar 13, 2024	FKC Co., Ltd.
Vaughan Chopper Pumps	Standardization & Sole Source Procurement	Agencywide	Feb 21, 2024	Vaughan Company
Fisher Actuators, Positioners, and Butterfly Valve Assemblies	Standardization	Agencywide	Oct 16, 2024	Fisher
EJ Composite Manhole Frames and Covers	Sole Source Standardization & Pre-Purchase (7 years)	Agencywide	Jul 16, 2025	EJ w/ TITUS TwistLift Locking System

Notes

- APG Neuros Blowers pre-selected equipment to install at RP-4 (EN17110), RP-5 & CCWRF (EN17006) (no board action to standardize)
- Rockwell, IEUA, Royal pre-purchase Rockwell parts (EN13016.05) Nov 2022
- Skid-mounted rotary drum thickener (single source procurement 6/15/22)
- RP-1 Centrifuge Foul Air Line Retrofit (EN19043) Pre-purchase of four covers
- SSI Fine Bubble Diffusers - Standardization & Sole Source Agencywide to include RP-1 & CCWRF

Inland Empire Utilities Agency

A MUNICIPAL WATER DISTRICT

AVAD ENGINEERING